Design Guide for Buildable Steel Connections

-Bolted and Welded Connection to SS EN1993-1-8

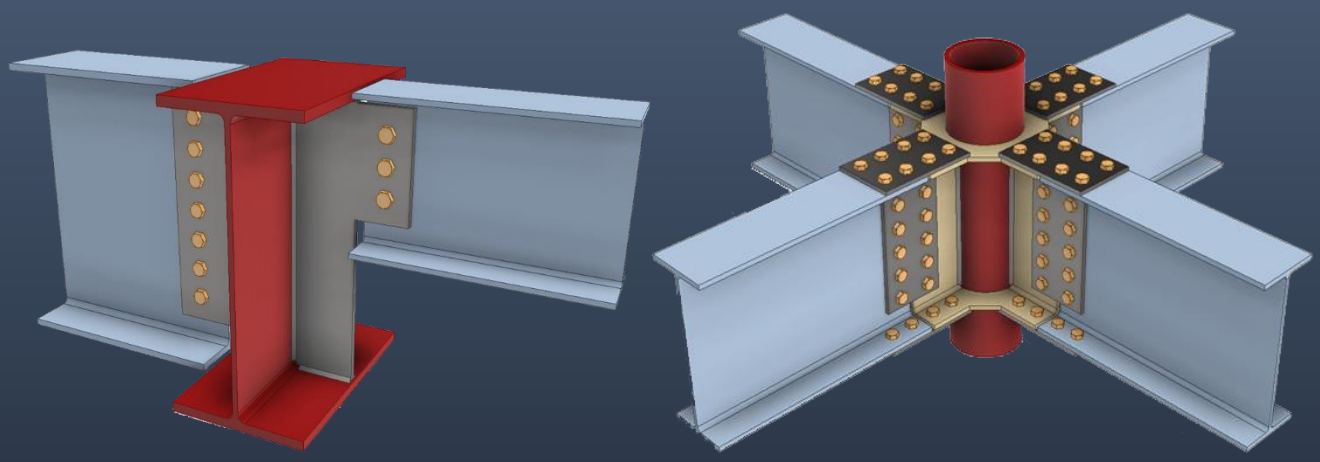

Building and Construction Authority

We shape a safe, high quality, sustainable and friendly built environment.

SINGAPORE STRUCTURAL STEEL SOCIETY

Design Guide for Buildable Steel Connections

-Bolted and Welded Connections to SS EN1993-1-8

J Y Richard Liew

National University of Singapore

Honorary fellow, Singapore Structural Steel Society

NOTE

1. Whilst every effort has been made to ensure accuracy of the information contained in this design guide, the Singapore Structural Steel Society ("SSSS") and Building and Construction Authority ("BCA") makes no representations or warranty as to the completeness or accuracy thereof. Information in this design guide is supplied on the condition that the user of this publication will make their own determination as to the suitability for his or her purpose(s) prior to its use. The user of this publication must review and modify as necessary the information prior to using or incorporating the information into any project or endeavor. Any risk associated with using or relying on the information contained in the design guide shall be borne by the user. The information in the design guide is provided on an "as is" basis without any warranty of any kind whatsoever or accompanying services or support.

2. Nothing contained in this design guide is to be construed as a recommendation or requirement to use any policy, material, product, process, system or application and SSSS & BCA make no representation or warranty express or implied. NO REPRESENTATION OR WARRANTY, EITHER EXPRESSED OR IMPLIED OF FITNESS FOR A PARTICULAR PURPOSE IS MADE HEREUNDER WITH RESPECT TO INCLUDING BUT NOT LIMITED, WARRANTIES AS TO ACCURACY, TIMELINES, COMPLETENESS, MERCHANTABILITY OR FITNESS FOR A PARTICULAR PURPOSE OR COMPLIANCE WITH A PARTICULAR DESCRIPTION OR ANY IMPLIED WARRANTY ARISING FROM THE COURSE OF PERFORMANCE, COURSE OF DEALING, USAGE OF TRADE OR OTHERWISE, TO THE FULLEST EXTENT PERMITTED BY LAW. In particular, SSSS & BCA make no warranty that the information contained in the design guide will meet the user's requirements or is error-free or that all errors in the drawings can be corrected or that the drawings will be in a form or format required by the user.

3. In no event will SSSS & BCA or the authors be responsible or liable for damages of any kind resulting from the use or reliance upon information or the policies, materials, products, systems or applications to which the information refers. In addition to and notwithstanding the foregoing, in no event shall SSSS & BCA be liable for any consequential or special damages or for any loss of profits incurred by the user or any third party in connection with or arising out of use or reliance of this design guide.

Copyright @ 2019 Building and Construction Authority, Singapore.

Copyright @ 2019 Singapore Structural Steel Society.

All rights reserved. This document or any part thereof may not be reproduced for any reason whatsoever in any form or means whatsoever and howsoever without the prior written consent and approval of the Building and Construction Authority and Singapore Structural Steel Society.

Whilst every effort has been made to ensure the accuracy of the information contained in this publication, the Building and Construction Authority and Singapore Structural Steel Society, its employees or agents shall not be responsible for any mistake or inaccuracy that may be contained herein and all such liability and responsibility are expressly disclaimed by these said parties.

Contents

Contents v

Foreword by the Author ix

Foreword by the President of SSSS x

Acknowledgement xi

List of Examples xii

1 Introduction 1

1.1 About this design guide 1

1.2 Material 1

1.3 Joint classification 2

2 Buildable Beam to Beam/Column connections 3

2.1 Simple connections 3

2.1.1 Bolted Connections (shear and/or tension connections) 3

2.1.2 Welded Connections (shear and/or tension connections) 3

2.1.3 Recommendation for fin plate connections 3

2.2 Moment-resisting connections 4

2.2.1 Bolted Connections (Moment-resisting connections) 4

2.2.2 Welded Connections (Moment-resisting connections) 4

2.3 Design steps for simple connections – bolted connections 4

2.3.1 Fin plate connection design procedures 5

2.3.2 End plate connection design procedure 13

2.3.3 Example 1 – One-sided Beam-to-Beam connection with extended fin plate 17

2.3.4 Example 2 – Double-sided Beam-to-Beam connection with extended fin plates 36

2.3.5 Example 3 – One-sided Beam-to-Beam skewed connection with extended fin plates 65

2.3.6 Example 4 – Two-sided Beam-to-Column fin plate connection bending about the major axis of the column 80

2.3.7 Example 5 – Two-sided Beam-to-Column extended fin plate connection in minor axis with extended fin plate 105

2.3.8 Example 6 – Fin plate connection to circular hollow column 134

2.3.9 Example 7 – Beam-to-Beam connection 150

2.3.10 Example 8 – Beam-to-Beam connection at different level 167

2.4 Design steps for moment-resisting connections – bolted connections 181

2.4.1 Extended fin plate connections design procedures 182

2.4.2 End plate connections design procedures 191

2.4.3 Example 9 – Double-sided Beam-to-Beam connection with extended fin-plate (moment-resisting connection) for beams of similar depth 199

2.4.4 Example 10 – Double-sided Beam-to-Beam connection with extended fin-plate (moment-resisting connection) for beams of different depths with haunch 214

2.4.5 Example 11 – Double-sided Beam-to-Beam connection with extended fin-plate (moment-resisting connection) for beams of different depths with connection plate 232

2.4.6 Example 12 – I-beams connecting to hollow section column with external ring plate 247

2.4.7 Example 13 – I-beam of different depths connecting to hollow section column with external ring plate 265

2.4.8 Example 14 – Beam-to-Column connection (moment-resisting connection) bending about the major axis of the column with different beam depths 285

2.4.9 Example 15 – Beam-to-Column connection bending about the minor axis of the column with different beam depths 307

2.4.10 Example 16 – Beam-to-Beam connection (moment-resisting connection) in minor axis (Section a) 324

2.4.11 Example 17 – Beam-to-Beam connection (moment-resisting connection) in minor axis (Section b) 351

2.4.12 Example 18 – Beam-to-Beam connection (moment-resisting connection) in major axis and/or minor axis (section b) 370

2.4.13 Example 19 – Beam-to-Beam connection (moment-resisting connection) in major axis and/or minor axis (section c) 400

2.5 Strengthening of the joints 421

2.5.1 Example 20 – Stiffened extended fin-plates for secondary beams 422

2.5.2 Example 21 – Stiffened extended fin-plates connecting to column in the minor axis (Section a) 430

2.5.3 Example 22 – Stiffened extended fin-plates connecting to column in the minor axis (Section b) 437

2.5.4 Example 22 – Stiffened extended fin-plates connecting to column in the minor axis (Section c) 442

2.5.5 Example 23 – Stiffened column web 446

2.6 Splice connections 458

2.6.1 Example 24 – Beam splice – A combination of welding to the top flange and bolting to the web & bottom flange 462

2.6.2 Example 25 – Beam splice – A combination of welding to the top & bottom flanges with bolting to the web 476

3 Base Plate Connections 479

3.1 Base Plate Connection 479

3.2 Design steps 479

3.3 Design basics 480

3.4 Typical Column Base Plate 481

3.4.1 Example 1 – Use of L-Bolt 482

3.4.2 Example 2 – Vertical holding down bolt with nuts and washers 495

3.5 Steel-to-concrete connections 507

3.5.1 Example 3 – Embedded plate into RC wall/column 508

4 Connections for Hollow Steel Sections 515

4.1 Modes of failures 515

4.2 Shear connection using fin plates 516

4.2.1 Example 1 – Shear connection using fin plate (CHS column) 517

4.2.2 Example 2 – Beam to rectangular column connection using fin plate 530

4.3 Connection of I-beam to hollow steel columns using extended endplates 537

4.3.1 Example 3 – Beam to Rectangular column connection using extended end plate 537

4.4 Connection of narrow beam to hollow steel columns 546

4.4.1 Example 4 – Narrow I beam to circular hollow column connection 546

4.5 Connection of I-beam to circular hollow section steel column 571

4.5.1 Example 5 – I beam to circular column connection with beam stub pre-welded to column 571

4.6 Connection of I-beam to hollow steel columns using diaphragm plates 591

4.6.1 Example 6 – I-beam to hollow steel columns with diaphragm plates 591

5 Bracing connections 597

5.1 Introduction 597

5.2 Materials 597

5.3 Design and Detailing 597

5.3.1 Example 1 – Welding of steel rod to a steel plate 598

5.4 Gusset plates to main members 603

5.4.1 Example 2 – Turn buckle and gusset plate connection 603

5.4.2 Example 3 – Gusset plate connection for bracing type 2 612

6 Purlin Connections 627

6.1 Introduction 627

6.2 Design and detailing 627

6.3 Provisions of sag rods 628

7 Non-standard Connections 630

7.1 Introduction 630

7.2 Tubular column-to-column connections (different column sizes) 630

7.3 Member transition in truss chords 635

7.4 Stiffeners in truss chords 636

7.4.1 Example 1 – Stiffened truss connection 636

7.5 Double-sided beam-to-beam composite connection using fin plates and contact plates 648

8 Good Practices for Connections Design 660

8.1 General 660

8.2 Recommendations for cost-effective connection design **660**
8.3 Non-preferred steel connections **662**
8.4 Alternate connections **665**
References **668**
Annex A: Case Study for Productivity Improvement **670**

Foreword by the Author

This publication covers the range of structural steelwork connections that are seen as buildable from the fabricators' point of view. It provides a guide to the design of simple connections, moment connections and special connections in steelwork including detailed examples how to design them.

Included in this Guide are bolted and welded connections suitable for use in simple, semi-continuous and continuous frame design. The design is based on SS EN1993-1-8 and Singapore national annex, with supplementary information from SCI Publications: Joints in steel construction- Simple and moment connections, CIDECT design guide 9 – for structural hollow section column connections and GB 50936:2014.

The Guide is produced by the SSSS work group with sponsorship from the Singapore Structural Steel Society. The work group was established in 2017 to bring together academics, consultants and steelwork contractors to work on the development of design guides for buildable connections, which are commonly used in practice. The ideas gathered in the Guide come from the sharing of knowledge of individuals from the steel construction industry. As the Guide is not a static document, there is little doubt that future amendments and improvement to it will depend on the feedback from the professionals and increasing collaboration between SSSS, the Building and Construction Authority (BCA) and the National University of Singapore (NUS).

Much of this collaboration has been on a voluntary basis with professional pooling their knowledge to produce examples and design rules that best reflect the modern practice in steelwork construction. The author gratefully acknowledges the helps he has received from the consultants, BCA, and SSSSS, who publish this Guide.

It is hoped that the readers of this Guide will find it not only a valuable source of reference but also a book that they will use regularly to design and build new structures. The back ground information to this guide also help to provide insights into the behaviour of steel connections. It is also hoped that this collaborative venture will help draw the professional community interested in steel structures closer together to advance the application of structural in construction.

J Y Richard Liew (Lead Author)
Professor, National University of Singapore
Honorary Fellow, Singapore Structural Steel Society

Foreword by the President of SSSS

The Structural Steel Society of Singapore (SSSS) strives to pursue the Society's vision for the industry to adopt the use of structural steel in the built environment sector. One of the ways to boost the adoption of structural steel is to improve the current industry practices on the design and detailing of steel connections. Through consultation with the industry, it was found that there is a need to bridge the gap between consultants and steel fabricators that hinders the use of more buildable steel connections in order to facilitate ease of fabrication and site installation of steel structures.

With the assistance of the Building and Construction Authority (BCA) in driving productivity through the use of structural steel construction, SSSS prepared this guide book in order to raise the capability of the industry through the use of standardised buildable connections. It is envisaged that the use of this guide book by design consultants will align with connection details commonly adopted by steel fabricators in their fabrication and erection procedures. Thus, this will also reduce disruption arising from abortive work due to design changes and the time taken to further develop the steel connection details can be minimised.

It is hoped that the guide book will serve a de facto standard for designers to adopt buildable connections in their works as detailed calculations of the various connections are provided for reference. Moving forward, the Society will continue to engage with the SSSS members, consultants, builders, academia and other stakeholders to encourage the use of structural steel construction in our industry.

I would like to thank the workgroup members, authors of the guidebook, officers of the BCA and friends from the building industry for their contributions and support in making this publication a success for the benefit of the industry.

Melvin Soh

President, Singapore Structural Steel Society

Acknowledgement

The Singapore Structural Steel Society ("SSSS") would like to thank the authors for developing this Guidebook as well as the members of the work group for their valuable comments and contributions.

The authors would also like to acknowledge the preparation of all the drawings by Mr. Zhao Yuzhe of Applied Research Consultants Pte. Ltd.

Authors

Prof. Richard Liew, National University of Singapore

Mr Shi Jiachen, Applied Research Consultants Pte Ltd

Dr Wang Tongyun, National University of Singapore

Members of the Work Group

The Work Group appointed by SSSS to assist in the preparation of this guidebook comprises of the following:

SSSS: Dr Pang Sze Dai (Chairman)

Dr Ng Yiaw Heong

Er. Lee Chee Weye

Er. Joe Lam

Er. Tay Yak Hong

Er. Chua Teck Leng

Er. Chelvadurai Harendran

Mr Shanthakumar Mayooran

BCA: Er. Rose Nguan

Mr Albert Tang

Mr See Toh Chee Fung

Er. Lung Hian Hao

Er. Chin Leong Siong

Er. Jimmy Wong Wan Khin

List of Examples

Beam-to-Beam Connections		
Type	**Section /Page**	**Remark**
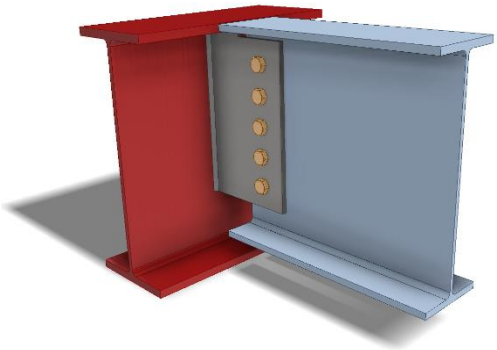	2.3.3 /Page 17	One-sided with extended fin plate
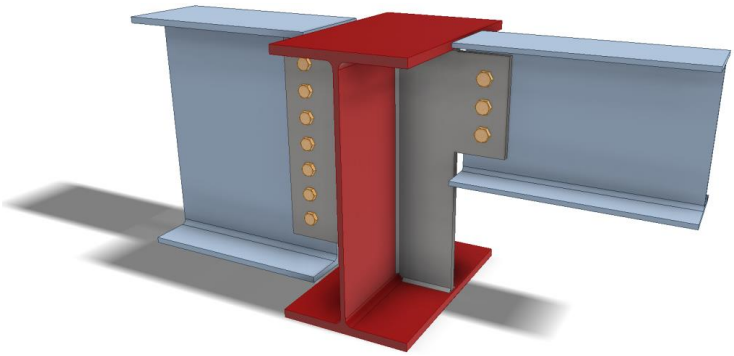	2.3.4 /Page 36	Double-sided with extended fin plate
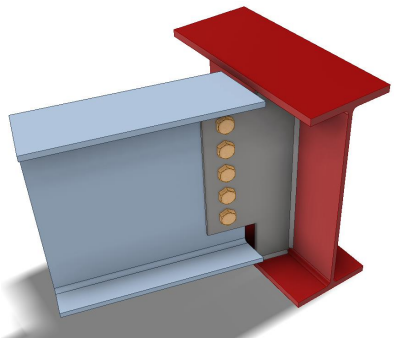	2.3.5 /Page 65	One-sided skewed connections with extended fin plate
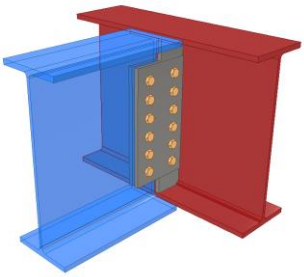	2.3.9 /Page 150	Double fin plates connections

Beam-to-Beam Connections		
Type	**Section /Page**	**Remark**
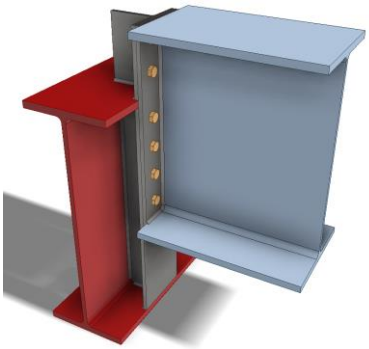	2.3.10 /Page 167	Beams connected at different levels
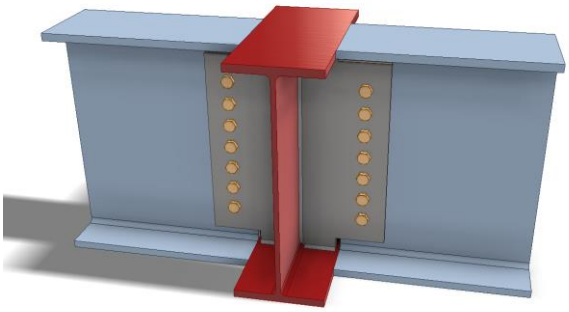	2.4.3 /Page 199	Double-sided with extended fin plate
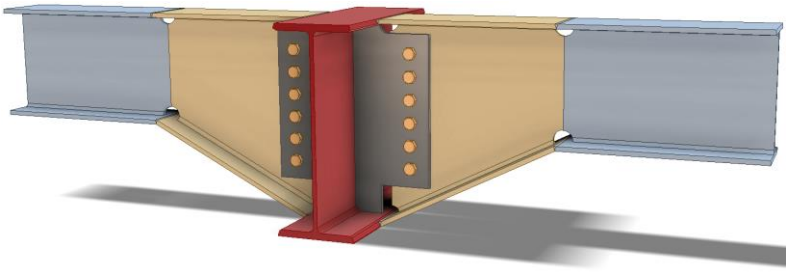	2.4.4 /Page 214	Double-sided with extended fin plate for beams of different depths
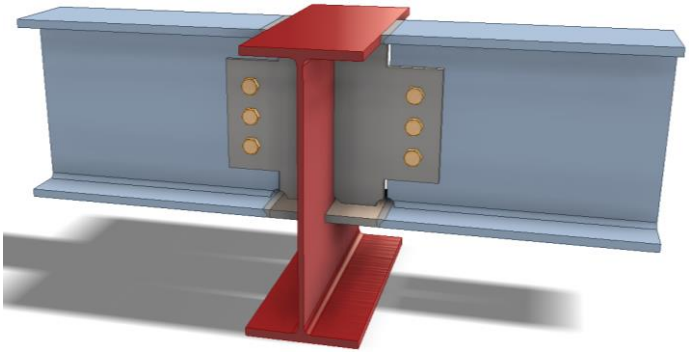	2.4.5 /Page 232	Double-sided with extended fin plate for beams of different depths

Beam-to-Beam Connections		
Type	**Section /Page**	**Remark**
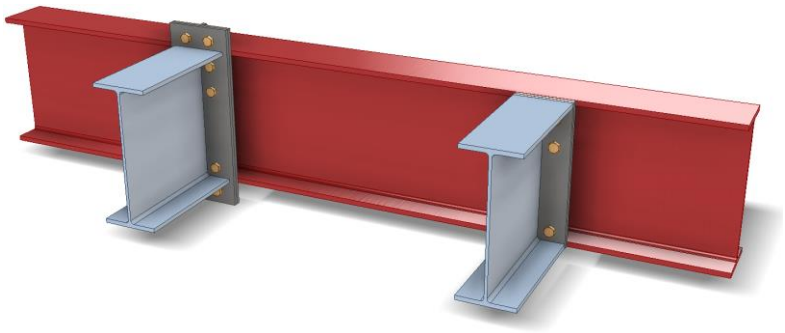	2.4.10 /Page 324 2.4.11 /Page 351	End plate connections
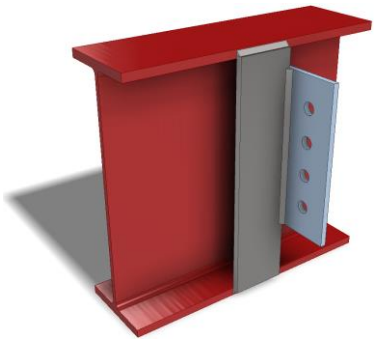	2.5.1 /Page 422	Stiffened extended fin plate
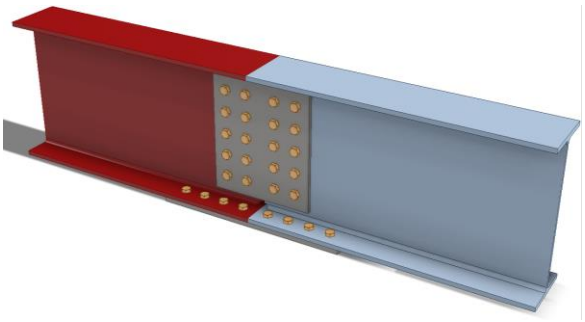	2.6.1 /Page 462	Beam splice with a combination of welding and bolting
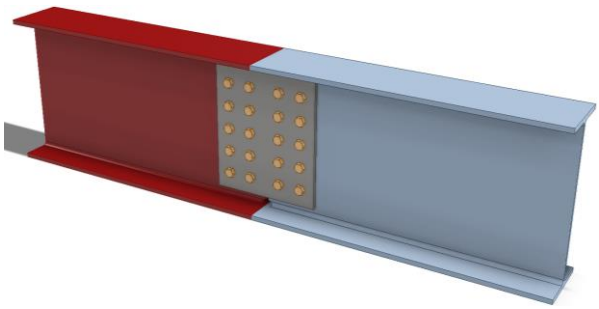	2.6.2 /Page 476	Beam splice with a combination of welding and bolting

Beam-to-Column Connections		
Type	**Section/ Page**	**Remark**
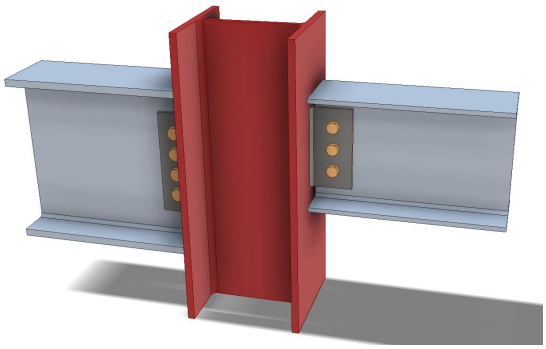	2.3.6 /Page 80	Fin-plate connection bending about the major axis of column
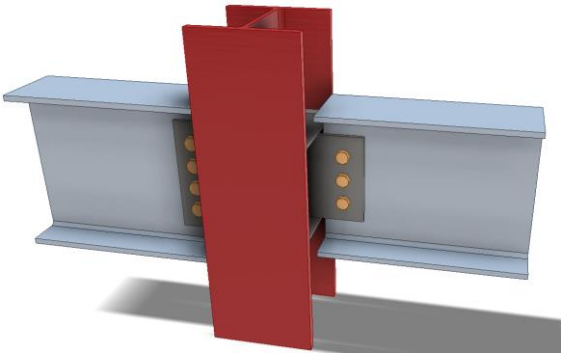	2.3.7 /Page 105	Extended fin plate connection bending about the minor axis of the column
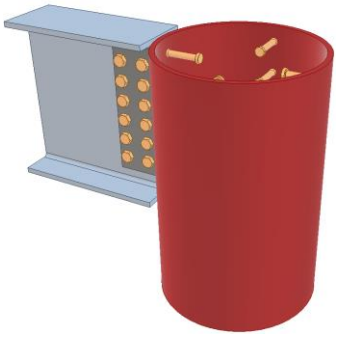	2.3.8 /Page 134	Fin plate connection to circular hollow column
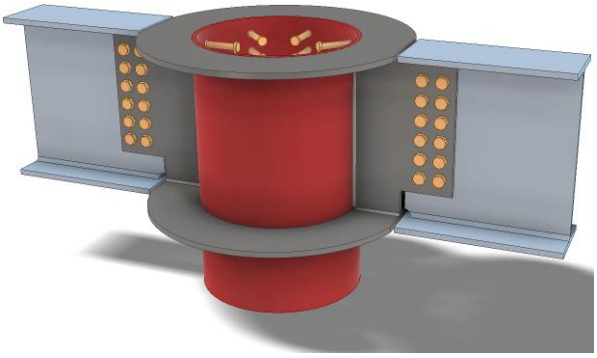	2.4.6 /Page 247	I-beams connecting to hollow section column with external ring plate

Beam-to-Column Connections		
Type	**Section/ Page**	**Remark**
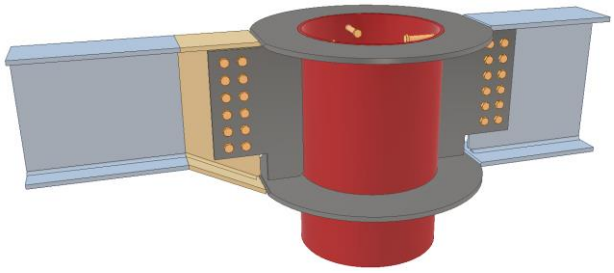	2.4.7 /Page 265	I-beams of different depths connecting to hollow section column with external ring plate
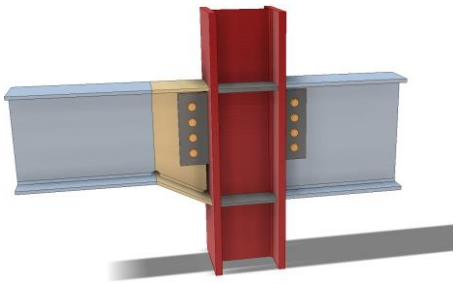	2.4.8 /Page 285	Beam-to-column connection bending about major axis of the column
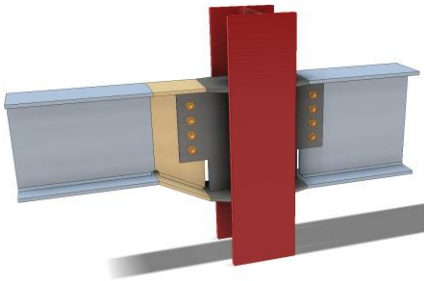	2.4.9 /Page 307	Beam-to-column connection bending about the minor axis of column
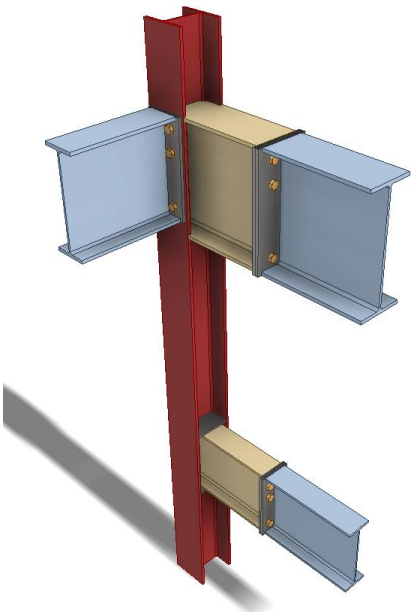	2.4.12 /Page 370 2.4.13 /Page 400	End plate connections

Beam-to-Column Connections		
Type	**Section/ Page**	**Remark**
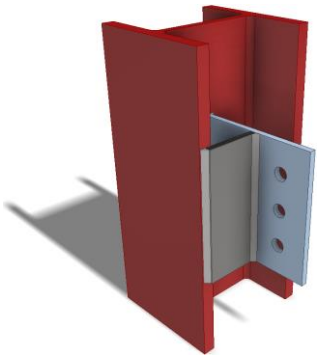	2.5.2 /Page 430	Stiffened extended fin plate
	2.5.3 /Page 437	Stiffened extended fin plate
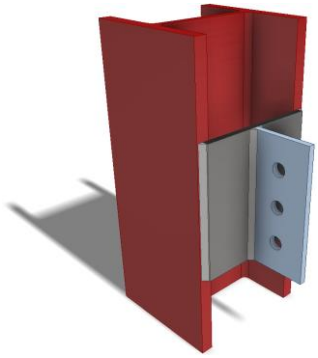	2.5.4 /Page 442	Stiffened extended fin plate
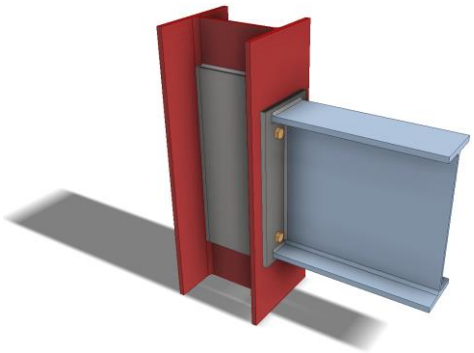	2.5.5 /Page 446	Stiffened column web

Beam-to-Column Connections		
Type	**Section/ Page**	**Remark**
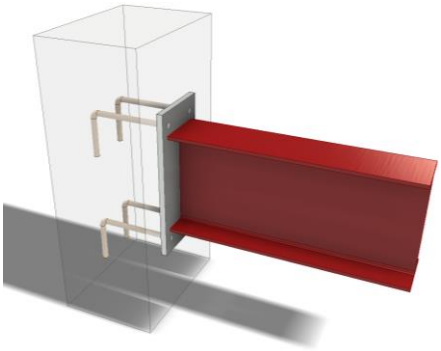	3.5.1 /Page 508	Embedded plate in RC column/wall
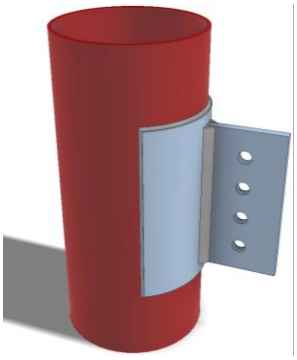	4.2.1 /Page 517	Beam to circular column connection using fin plate
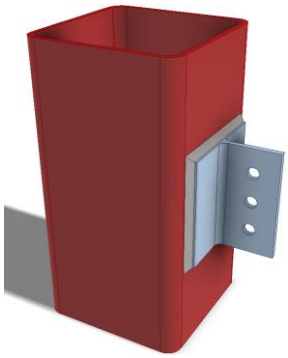	4.2.2 /Page 530	Beam to rectangular column connection using fin plate
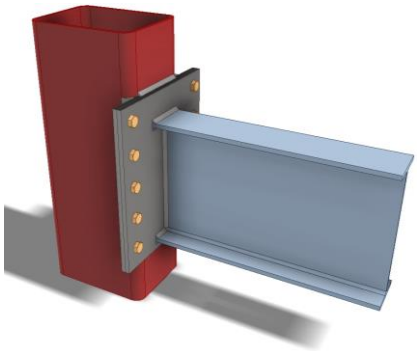	4.3.1 /Page 537	Beam to rectangular column connection using extended end plate

Beam-to-Column Connections		
Type	**Section/ Page**	**Remark**
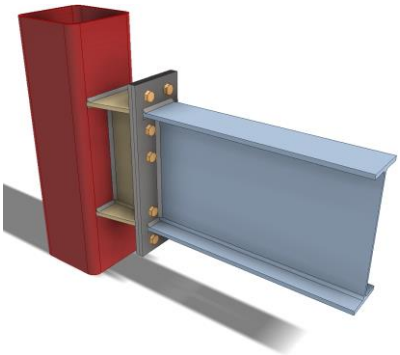	4.4.1 /Page 546	Narrow I beam to circular hollow column connection
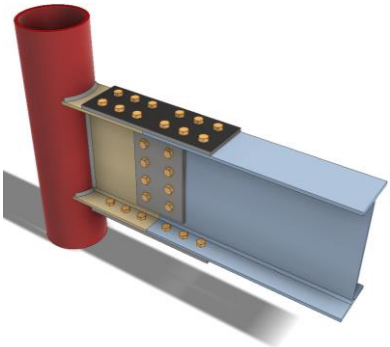	4.5.1 /Page 571	I beam to circular column connection with beam stub pre-welded to column
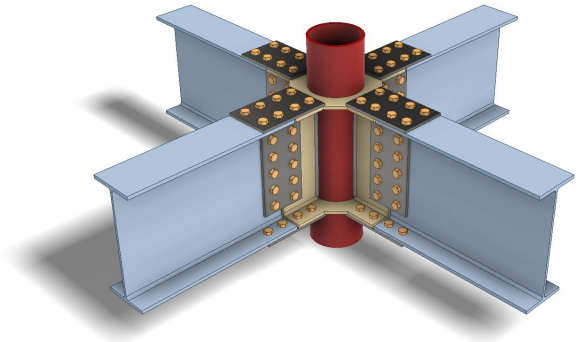	4.6.1 /Page 591	Using diaphragm plate

Bracing connections		
Type	**Section/ Page**	**Remark**
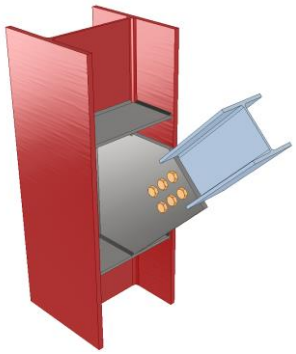	5.4.3 /Page 612	Gusset plate
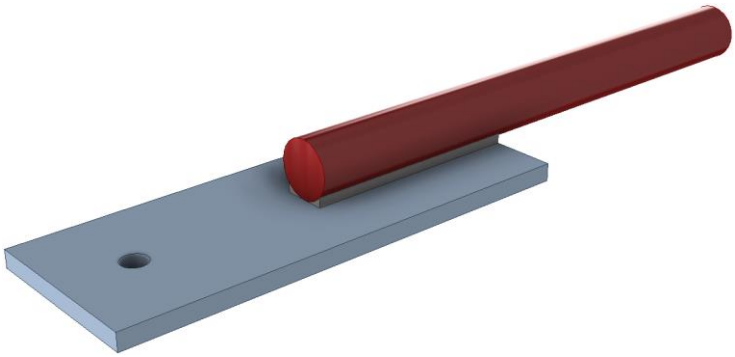	5.3.1 /Page 598	Single sided flare groove weld
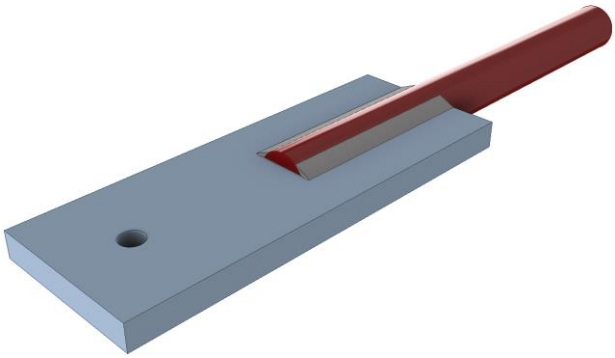	5.3.1 /Page 598	Double sided fillet weld
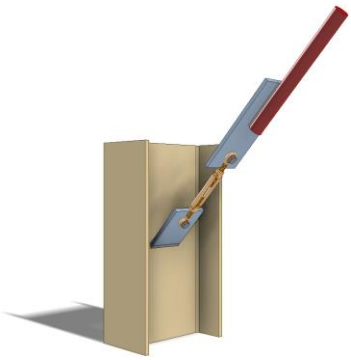	5.4.1 /Page 603	Turn buckle and gusset plate

Base connections		
Type	**Section/ Page**	**Remark**
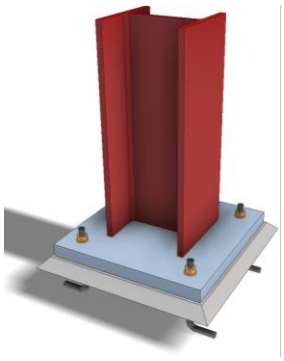	3.4.1 /Page 482	L bolt
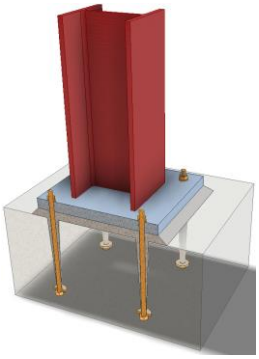	3.4.2 /Page 495	Vertical holding down bolt

Non-standard connections		
Type	**Section/ Page**	**Remark**
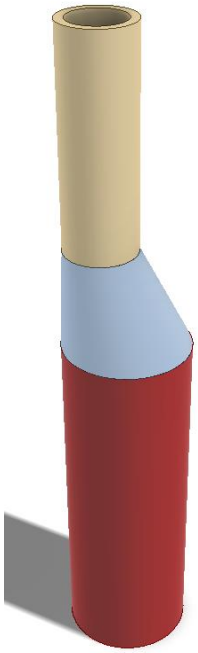	7.2 /Page 630	Circular columns with different sizes
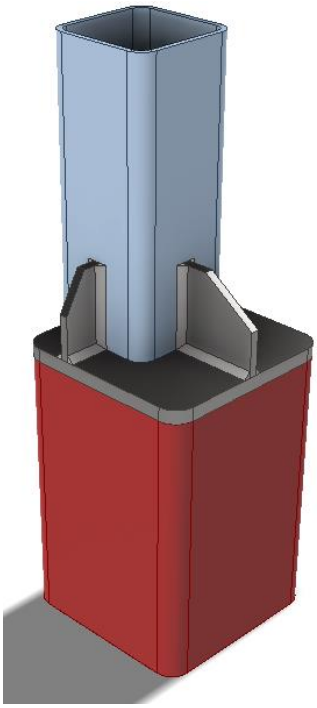	7.2 /Page 630	Rectangular columns with different sizes

Non-standard connections		
Type	**Section/ Page**	**Remark**
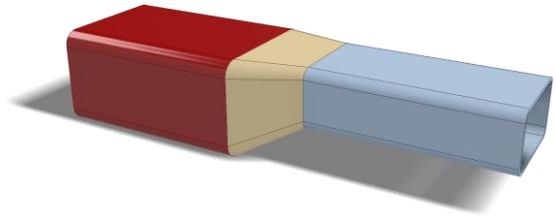	7.3 /Page 635	Member transition
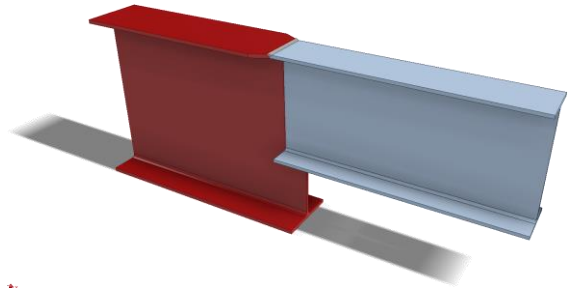	7.3 /Page 635	Member transition
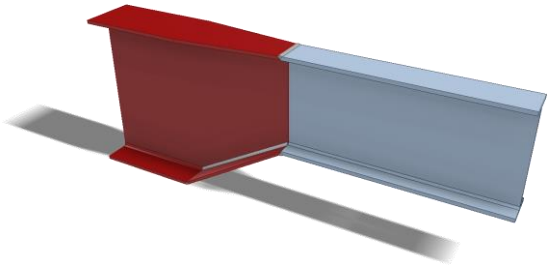	7.3 /Page 635	Member transition
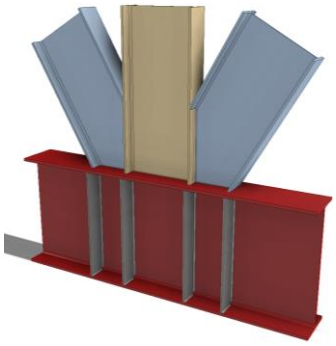	7.4.1 /Page 636	Stiffeners in truss chord
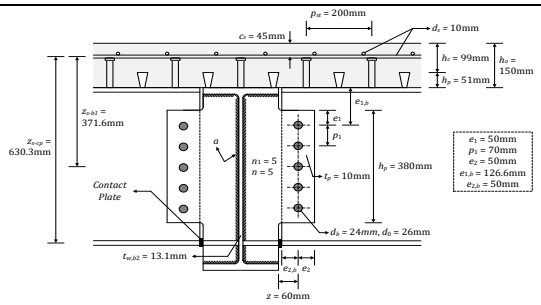	7.5 /Page 648	Composite connection

1 Introduction

1.1 About this design guide

Connection design is closely related to the fabrication and erection process of a structure. For most of design guides and codes, they only provide engineers with rules to check the resistance, stability and deformations of the connections. There is no specific guideline on buildability of connections. This publication provides guidance for designing various types of connections that are perceived to be more buildable and eventually will improve the speed of steelwork construction. These connections are designed in accordance with SS EN1993-1-8 and SCI Publications P358 & P398. Other relevant design guides are also referred if the rules in Eurocodes are not applicable or not adequate. It should be noted that SS EN1993-1-8 follows the same rules and principles in EN1993-1-8, and hence they are generally referred to as SS EN1993-1-8 in this Guide.

Design procedures are provided for:

a) Beam-to-Beam and Beam-to-Column connections
    - With extended fin plate (for both shear & moment connections)
    - With end plate (for both shear & moment connections)
b) Strengthening of joints
    - Stiffening extended fin plate
    - Supplementary web plates for column web
c) Beam splices
   A combination of welding and bolting with cover plates
d) Column base plate connections
   Steel plate with anchorage bolts
e) Connections for hollow steel sections
   Connecting universal sections to hollow steel sections with fin plates, end plates and diaphragm plates.
f) Bracing connections
    - Weld resistance for connecting steel rod to gusset plate
    - Gusset plate resistance for connecting universal sections
g) Purlin connections
h) Non-standard connections
    - Tubular column-to-column connections for different column sizes
    - Member transition in truss chord
    - Stiffeners in truss chord
    - Semi-continuous composite beam-to-beam joint

Design examples of all the above connections are also given.

1.2 Material

This publication is only valid for connections with material or products comply with standard from Eurocode 3. The material properties used in this guide follow BC 1:2012 and Table 3.1 of SS EN1993-1-1, and only steel grades from S235 to S460 are covered. Nominal values of the yield strength f_y and ultimate strength f_u depend on the thickness of the steel elements.

1.3 Joint classification

According to SS EN 1993-1-8 Clause 5.2.1, joints may be classified by stiffness or strength. All joints need to fulfil the assumptions made in design and modelling. Based on the rotational stiffness, a joint can be classified as rigid, nominally pinned or semi-rigid. Figure *1-1* below which is extracted from SS EN 1993-1-8 provides classification boundaries based on rotational stiffness $S_{j,ini}$. Moreover, a joint may be classified as full-strength, nominally pinned or partial strength based on its moment resistance and that of the members it connects to. According to NA to SS EN 1993-1-8 Clause NA.2.6, connections designed in accordance with the principles given in SCI Publication P358 may be classified as nominally pinned joints.

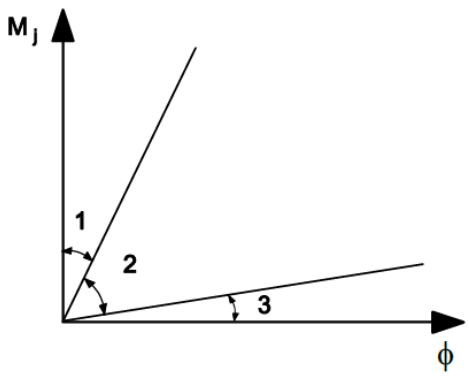

Zone 1: rigid, if $S_{j,ini} \geq k_b EI_b / L_b$

where:

$k_b = 8$ for frames where the bracing system reduces the horizontal displacement by at least 80 %

$k_b = 25$ for other frames, provided that in every storey $K_b/K_c \geq 0{,}1$ *)

Zone 2: semi-rigid

All joints in zone 2 should be classified as semi-rigid. Joints in zones 1 or 3 may optionally also be treated as semi-rigid.

Zone 3: nominally pinned, if $S_{j,ini} \leq 0{,}5\, EI_b / L_b$

*) For frames where $K_b/K_c < 0{,}1$ the joints should be classified as semi-rigid.

Key:

K_b	is	the mean value of I_b/L_b for all the beams at the top of that storey;
K_c	is	the mean value of I_c/L_c for all the columns in that storey;
I_b	is	the second moment of area of a beam;
I_c	is	the second moment of area of a column;
L_b	is	the span of a beam (centre-to-centre of columns);
L_c	is	the storey height of a column.

Figure 1-1 Classification of joints by stiffness (SS EN 1993-1-8)

2 Buildable Beam to Beam/Column connections

2.1 Simple connections

Simple joint is assumed to transfer only nominal moment without adversely affecting the overall structural system. Such nominal moment of resistance should not exceed 0.25 times the design moment of resistance required for a full-strength joint if the joint has sufficient rotation capacity.

2.1.1 Bolted Connections (shear and/or tension connections)

Most of the simple joint connections used are based on category type A (bearing type for shear connection) and category type D (for tension connections) where no preloading is required as per table 3.2 of SS EN 1993-1-8. The design resistance depends on the shear and bearing resistance or tensile resistance (where applicable) of the bolt connections.

The usage of bolt where preloading is not required should be “snug” tight while for connections sensitive to slippage, preloading is required. Preloaded bolts (category type B, C or E) will require a certain minimum amount of preload, which is dependent upon the surface smoothness of the threaded area in the bolts and nuts. In addition, the torque required to tighten the preloaded bolts and the recommended torque is usually provided by the bolt manufacturers.

2.1.2 Welded Connections (shear and/or tension connections)

Typically, the type of weld adopted for simple connections is fillet weld. It is recommended to have a symmetric fillet on both sides to distribute the load.

For end plates, the recommendation for the design of the weld is that the end plate should yield before the weld fractures. As for fin plates, full strength fillet weld is recommended. Alternatively, the required fillet weld can be designed based on the actual shear and nominal moments as per SS EN 1993-1-8.

2.1.3 Recommendation for fin plate connections

According to SCI Publication P358, fin plate connection design needs to fulfill the following requirements to ensure the connection provides the necessary rotational capacity and restraint to the supported member:

- Fin plate needs to be located as close to the top flange of the supported member as possible to ensure the stability.
- The depth of the fin plate should be greater or equal to 0.6 times the depth of the supported member to provide torsional restraint.
- The thickness of the fin plate or beam web should not be greater than 0.42 times and 0.5 times of the bolt diameter for S355 and S275 steel, respectively.
- The edge and end distance on fin plate or beam web should be at least 2 times the diameter of the bolt.

Table 2-1 below shows the standard details of fin plate connections suggested by SCI Publication P358.

Table 2-1 Standard fin plate connection details (SCI Publication P358)

Supported beam nominal depth mm	Number of vertical bolt lines	Recommended fin plate size mm	Gap mm
≤ 610	1	100×10	10
> 610	1	120×10	20
≤ 610	2	160×10	10
> 610	2	180×10	20
Bolts: M20 Gr.8.8 in 22 mm diameter holes			

2.2 Moment-resisting connections

Moment-resisting connections allows the joint to transfer not only the shear/tension forces but the effects of moment to the supporting structures.

2.2.1 Bolted Connections (Moment-resisting connections)

The resistance of the end-plate/extended plate bolted connection is based on the tensile resistance of the bolts within the tension zone, which is usually close to the top flange of the beam while the compression resistance of the bolts within the compression usually found at the bottom flange of the beam. The vertical shear resistance is through the bolts connected within the beam web.

2.2.2 Welded Connections (Moment-resisting connections)

Fillet weld is preferred. However, if the required size of the fillet weld will result into a weld thicker than the connected part, partial penetration with superimposed fillet or full butt weld may be required.

Full penetration butt weld is not encouraged due to imperfections during steel fabrication process. The incomplete root fusion or penetration is one of the common defects when NDT tests are carried out. Remedial actions such as grinding of the weld to sound weld/base metal and re-welding based on the appropriate welding procedures renders the fabrication unproductive. It is advised to adopt partial butt weld such as 80% penetration if the design strength is not exceeded. Else, full strength butt weld such as partial penetration butt weld with superimposed fillet welds can be adopted for better productivity.

2.3 Design steps for simple connections – bolted connections

There are two types of simple connections illustrated in this guide: fin plate connection and end plate beam to beam connection. The design steps for each type of connection are shown in Figure *2-1* below.

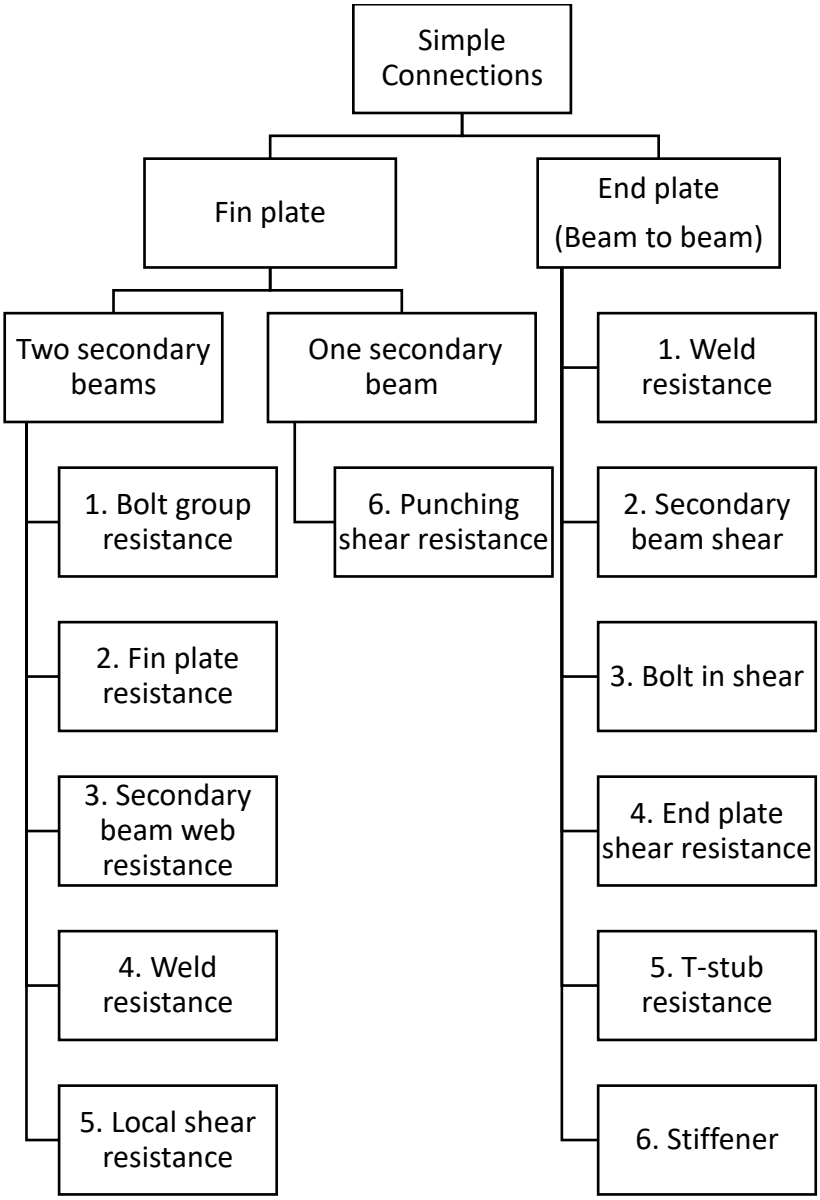

Figure 2-1 Design steps for simple connections

For ease of site installation, it is preferable to extend the fin plates beyond the flange of the primary beam. Design checks are required on the stability of the fin plate for lateral torsional buckling in addition to the nominal moment generated from the eccentricity connections.

For the purpose of illustration, all bolts shown in the following worked examples are non-preloaded bolts

2.3.1 Fin plate connection design procedures

Bolt shear

Shear resistance of one bolt per shear plane (SS EN1993-1-8 Table 3.4):

$$F_{v,Rd} = \frac{\alpha_v f_{ub} A_s}{\gamma_{M2}}$$

where

A_s: tensile stress area of the bolt

$\alpha_v = 0.6$ for classes 4.6 and 8.8

$\alpha_v = 0.5$ for class 10.9

$\gamma_{M2} = 1.25$ (SS EN1993-1-8)

f_{ub}: nominal values of the ultimate tensile strength of bolts (SS EN 1993-1-8 Table 3.1)

Shear resistance of bolt group (SCI_P358 & SN017):

$$V_{Rd} = \frac{nF_{V,Rd}}{\sqrt{(1+\alpha n)^2 + (\beta n)^2}} \geq V_{Ed}$$

where

$$\alpha = 0 \text{ (for } \mathrm{n}_2 = 1) \; or \; \frac{zp_2}{2l} \text{ (for } \mathrm{n}_2 = 2)$$

z: distance between support and centroid of bolt group

n_1: number of bolts lines

n_2: number of vertical bolt lines

$$\beta = \frac{6z}{n_1(n_1+1)p_1} \text{ [for } n_2 = 1] \; or \; \frac{zp_1}{2l}(n_1 - 1) \text{ [for } n_2 = 2]$$

$$l = \frac{n_1}{2}p_2^2 + \frac{1}{6}n_1(n_1^2 - 1)p_1^2$$

$n = n_1 \times n_2$= total number of bolts

<u>Bolt bearing</u>

Bearing resistance of a single bolt (SS EN1993-1-8 Table 3.4):

$$F_{b,Rd} = \frac{k_1 \alpha_b f_u dt}{\gamma_{M2}}$$

where

d: diameter of bolt

t: thickness of fin plate or beam web

f_u: ultimate strength of fin plate or beam web

$$k_1 = \min\left(\frac{2.8e_x}{d_0} - 1.7; \frac{1.4p_x}{d_0} - 1.7; 2.5\right)$$

$$\alpha_b = \min\left(\frac{e_y}{3d_0}; \frac{p_y}{3d_0} - \frac{1}{4}; \frac{f_{ub}}{f_u}; 1.0\right)$$

$x = 2; y = 1$ for vertical direction bearing

$x = 1; y = 2$ for horizontal direction bearing

f_{ub}: ultimate strength of bolt

d_0: diameter of bolt hole

Bolt bearing resistance of bolt group (SCI_P358):

$$V_{Rd} = \frac{n}{\sqrt{\left(\frac{1+\alpha n}{F_{b,ver,Rd}}\right)^2 + \left(\frac{\beta n}{F_{b,hor,Rd}}\right)^2}} \geq V_{Ed}$$

where

α, β: are defined in (1a)

<u>Shear of fin plate (SCI_P358)</u>

Gross section shear resistance:

$$V_{Rd,g} = \frac{h_p t_p}{1.27} \frac{f_{y,p}}{\sqrt{3}\gamma_{M0}}$$

The coefficient 1.27 takes into account the reduction in the shear resistance of the cross section due to the nominal moment in the connection

where

h_p: depth of fin plate

t_p: thickness of fin plate

$f_{y,p}$: yield strength of fin plate

$\gamma_{M0} = 1.0$ (SS EN1993-1-8)

Net section shear resistance:

$$V_{Rd,n} = \frac{A_{v,net} f_{u,p}}{\sqrt{3}\gamma_{M2}}$$

where

$A_{v,net} = t_p(h_p - n_1 d_0)$

$f_{u,p}$: ultimate strength of fin plate

Block shear resistance:

$$V_{Rd,b} = \frac{0.5 f_{u,p} A_{nt}}{\gamma_{M2}} + \frac{f_{y,p}}{\sqrt{3}} \frac{A_{nv}}{\gamma_{M0}}$$

where

$A_{nt} = t_p\left(e_2 - \frac{d_0}{2}\right)$ for $n_2 = 1$

$A_{nt} = t_p\left(p_2 + e_2 - \frac{3d_0}{2}\right)$ for $n_2 = 2$

$A_{nv} = t_p(h_p - e_1 - (n_1 - 0.5)d_0)$

∴ Shear resistance of fin plate:

$V_{Rd} = \min\,(V_{Rd,g}; V_{Rd,n}; V_{Rd,b}) \geq V_{Ed}$

*If the distance L_j between the centers of the end bolts in a joint is greater than 15 times the diameter of the bolt ($i.e. L_j > 15d$), reduction factor β_{Lf} needs to be applied to the resistance of the bolt group. (SS EN1993-1-8 3.8 (1))

$$0.75 \leq \beta_{Lf} = \left(1 - \frac{L_j - 15d}{200d}\right) \leq 1.0$$

<u>Bending of fin plate (SCI_P358)</u>

If $h_p \geq 2.73z$, the bending resistance of fin plate is insignificant.

Else,

$$V_{Rd} = \frac{W_{el,p}}{z}\frac{f_{y,p}}{\gamma_{M0}}$$

where

$$W_{el,p} = \frac{t_p h_p^2}{6}$$

z: distance between center line of bolt group and support

$\gamma_{M0} = 1.0$ (SS EN1993-1-8)

<u>Lateral torsional buckling of fin plate (SCI_P358)</u>

If fin plate is classified as Long fin plate ($z_p > t_p/0.15$), the lateral torsional buckling resistance of the fin plate:

$$V_{Rd} = \min\left(\frac{W_{el,p}}{z}\frac{\chi_{LT} f_{y,p}}{0.6\gamma_{M1}}; \frac{W_{el,p}}{z}\frac{f_{y,p}}{\gamma_{M0}}\right)$$

where

The 0.6 factor in the expression for V_{Rd} accounts for the triangular shape of the assumed bending moment diagram in the fin plate

χ_{LT}: reduction factor cater for lateral torsional buckling, can be obtained from (SCI_P358 or SS EN1993-1-1)

$\gamma_{M1} = 1.0$ (SS EN1993-1-8)

<u>Shear of secondary beam web (SCI_P358)</u>

Gross section shear resistance:

$$V_{Rd,g} = V_{pl,Rd} = A_v \frac{f_{y,b1}}{\sqrt{3}\gamma_{M0}}$$

where

A_v: shear area of secondary beam

for unnotched beams: $A_v = A_g - 2b_{b1}t_{f,b1} + (t_{w,b1} + 2r_{b1})t_{f,b1} \geq h_{w,b1}t_{w,b1}$

A_g: cross-section area of beam

b_{b1}: width of beam

$t_{f,b1}$: thickness of beam flange

$t_{w,b1}$: thickness of beam web

r_{b1}: root radius of beam

*In this guide, as fin plate is extended beyond the beam flange to facilitate construction, only unnotched beams are considered.

For net shear resistance, the design procedures are same as that in 2(a).

∴ shear resistance of beam web:

$$V_{Rd} = \min\left(V_{Rd,g}; V_{Rd,n}\right) \geq V_{Ed}$$

<u>Shear and bending interaction of the beam web (SCI_P358)</u>

According to SCI_P358, for short fin plate ($z_p \leq t_p/0.15$), shear and bending interaction check is not significant.

For long fin plate, it is necessary to ensure the connection can resist a moment $V_{Ed}z_p$ for single line of bolts or $V_{Ed}(z_p + p_2)$ for double lines of bolts.

Moment resistance of section ABCD:

$$M_{Rd} = M_{c,BC,Rd} + V_{pl,AB,Rd}(n_1 - 1)p_1 \geq M_{Ed} = V_{Ed}z_p \; or \; V_{Ed}(z_p + p_2)$$

where

$M_{c,BC,Rd}$: moment resistance of beam web section BC

for low shear $\left(V_{BC,Ed} \leq 0.5V_{pl,BC,Rd}\right)$:

$$M_{c,BC,Rd} = \frac{f_{y,b1}t_{w,b1}}{6\gamma_{M0}}\left((n_1 - 1)p_1\right)^2$$

for high shear ($V_{BC,Ed} > 0.5V_{pl,BC,Rd}$):

$$M_{c,BC,Rd} = \frac{f_{y,b1}t_{w,b1}}{6\gamma_{M0}}\left((n_1 - 1)p_1\right)^2\left(1 - \left(\frac{2V_{BC,Ed}}{V_{pl,BC,Rd}} - 1\right)^2\right)$$

$V_{BC.Ed}$: shear force on the beam web section BC

$$V_{BC,Ed} = V_{Ed}\frac{(n_1 - 1)p_1}{h_{b1}}$$

$V_{pl,AB,Rd}$: shear resistance of the beam web section AB

for single vertical line of bolts ($n_2 = 1$):

$$V_{pl,AB,Rd} = \frac{t_{w,b1}e_{2,b} \times f_{y,b1}}{\sqrt{3}\gamma_{m0}}$$

for two vertical lines of bolts ($n_2 = 2$):

$$V_{pl,AB,Rd} = \frac{t_{w,b1}\left(e_{2,b} + p_2\right) \times f_{y,b1}}{\sqrt{3}\gamma_{M0}}$$

$V_{pl,BC,Rd}$: shear resistance of beam web section BC

$$V_{pl,AB,Rd} = \frac{t_{w,b1}(n_1 - 1)p_1 \times f_{y,b1}}{\sqrt{3}\gamma_{M0}}$$

<u>Weld resistance</u>

Using full strength fillet weld with higher strength than connected member is a common practice. If full strength fillet weld is adopted, weld check is not necessary as it will not govern the failure of the connection.

Fillet weld connecting fin plate to primary beam or column is designed to take both vertical shear force and nominal moment. If weld group such as L shape weld or C shape weld is used, the nominal moment is taken as the product of vertical applied load V_{Ed} and distance between the applied load to the centroid of the weld group.

Longitudinal applied stress at critical point:

$$\tau_v = \frac{V_{Ed}}{A_u} + \frac{Mr_{zh}}{J}$$

where

V_{Ed}: applied shear force on fin plate

A_u: unit throat area

M: nominal moment taken as the product of V_{Ed} and distance between force and centroid of weld group

r_{zh}: horizontal distance between critical point and centroid of weld group

J: polar moment of inertia of weld group

Transverse applied stress at critical point:

$$\tau_h = \frac{N_{Ed}}{A_u} + \frac{Mr_{zv}}{J}$$

where

N_{Ed}: applied normal force on fin plate

Simplified method:

$$\tau_r = \sqrt{\tau_v^2 + \tau_h^2} \leq F_{w,L,Rd}$$

where

τ_r: resultant applied stress

$F_{w,L,Rd}$: design longitudinal shear strength of fillet welds

$$F_{w,L,Rd} = \frac{f_u/\sqrt{3}}{\beta_w \gamma_{M2}} a$$

f_u: ultimate tensile strength of weaker connected part

β_w: 0.80-1.00 (depends on weld grade)

a: fillet weld throat thickness

Directional method:

$$\left(\frac{\tau_v}{F_{w,L,Rd}}\right)^2 + \left(\frac{\tau_h}{F_{w,T,Rd}}\right)^2 \leq 1.0$$

where

$F_{w,T,Rd}$: design transverse strength of fillet welds= $KF_{w,L,Rd}$

$$K = \sqrt{\frac{3}{1 + 2\cos^2\theta}}$$

θ: angle between applied force and axis of the weld

In addition to the above checking, the transverse stress needs to fulfill the follow requirement (SS EN1993-1-8 Clause 4.5.3.2(6)):

$$\tau_v \leq \frac{0.9 f_u}{\gamma_{M2}}$$

*If applied force is 45° to the fillet weld and the connected surfaces are perpendicular to each other, fillet weld strengths $F_{w,L,Rd}$ & $F_{w,T,Rd}$ can be found from SCI P363.

For fillet welds on S275 steel:

Leg length s mm	Throat thickness a mm	Longitudinal resistance $F_{w,L,Rd}$ kN/mm	*Transverse resistance $F_{w,T,Rd}$ kN/mm
3.0	2.1	0.47	0.57
4.0	2.8	0.62	0.76
5.0	3.5	0.78	0.96
6.0	4.2	0.94	1.15
8.0	5.6	1.25	1.53
10.0	7.0	1.56	1.91
12.0	8.4	1.87	2.29
15.0	10.5	2.34	2.87
18.0	12.96	2.81	3.44
20.0	14	3.12	3.82
22.0	15.4	3.43	4.20
25.0	17.5	3.90	4.78

For fillet welds on S355 steel:

Leg length s mm	Throat thickness a mm	Longitudinal resistance $F_{w,L,Rd}$ kN/mm	*Transverse resistance $F_{w,T,Rd}$ kN/mm
3.0	2.1	0.51	0.62
4.0	2.8	0.68	0.83
5.0	3.5	0.84	1.03
6.0	4.2	1.01	1.24
8.0	5.6	1.35	1.65
10.0	7.0	1.69	2.07
12.0	8.4	2.03	2.48
15.0	10.5	2.53	3.10
18.0	12.96	3.04	3.72
20.0	14	3.38	4.14
22.0	15.4	3.71	4.55
25.0	17.5	4.22	5.17

*The transverse weld resistance is valid where the plates are at 90° and therefore $\theta = 45°$ and K = 1.225.

<u>Local shear resistance of primary beam or column (SCI_P358)</u>

Shear resistance of primary beam web or column:

$$F_{Rd} = \frac{A_v f_{y,2}}{\sqrt{3}\gamma_{M0}} \geq \frac{V_{Ed}}{2}$$

where

A_v: local shear area

for one secondary beam: $A_v = h_p t_2$

for two secondary beams: $A_v = \min(h_{p,1}; h_{p,2})\, t_2$

$$V_{Ed} = \left(\frac{V_{Ed,1}}{h_{p,1}} + \frac{V_{Ed,2}}{h_{p,2}}\right) \min\,(h_{p,1}; h_{p,2})$$

t_2: thickness of the supporting member

$f_{y,2}$: yield strength of supporting member

<u>(6) Punching shear resistance (SCI_P358)</u>

To ensure fin plate yield before punching shear failure:

$$t_p \leq t_2 \frac{f_{u,2}}{f_{y,p}\gamma_{M2}}$$

where

t_p: thickness of fin plate

$f_{y,p}$: yield strength of fin plate

$f_{u,2}$: ultimate strength of supporting member

2.3.2 End plate connection design procedure

Weld group resistance

Fillet weld between secondary beam web and end plate is designed to take shear force only. According to SS EN1993-1-8 6.2.2 (1), In weld connections, and in bolted connections with end-plates, the welds connecting the beam web should be designed to transfer the shear force from the connected beam to the joint, without any assistance from the welds connecting the beam flanges.

$$\tau_{v,Ed} = \frac{V_{Ed}}{A_u} \leq F_{w,L,Rd}$$

where

$\tau_{v,Ed}$: applied longitudinal stress

$F_{w,L,Rd}$: longitudinal resistance of fillet weld (may be found in SCI_P363)

V_{Ed}: applied shear force

A_u: unit throat area $(2d_b)$

Secondary beam shear resistance

$$V_{c,Rd} = \frac{A_v f_{y,b1}}{\sqrt{3}\gamma_{m0}} \geq V_{Ed}$$

where

A_v: shear area of secondary beam

$$A_v = A_{b,1} - 2b_{b1}t_{f,b1} + \left(t_{w,b1} + 2r_{b1}\right)t_{f,b1}$$

Bolt group resistance (SCI_P358)

Resistance of bolt group:

If $F_{b,Rd} \leq 0.8F_{v,Rd}$, then $F_{Rd} = nF_{b,Rd} > V_{Ed}$

If $F_{b,Rd} > 0.8F_{v,Rd}$, then $F_{Rd} = 0.8nF_{v,Rd} > V_{Ed}$

where

$F_{v,Rd}$: shear resistance of one bolt, same as 2.3.1 (1a)

$F_{b,Rd}$: minimum of the bearing resistance on the end plate and bearing resistance on supporting member per bolt, same as 2.3.1 (1b)

n: number of bolts

0.8: reduction factor allows for the presence of tension force

(4) End plate shear resistance

Gross section shear resistance:

$$V_{Rd,g} = 2A_v \frac{f_{y,p}}{\sqrt{3}\gamma_{M0}}$$

where

A_v: shear area of end plate

$A_v = h_p t_p$

h_p: depth of end plate

t_p: thickness of end plate

$f_{y,p}$: yield strength of end plate

Net section shear resistance:

$$V_{Rd,net} = \frac{A_{v,net} f_{u,p}}{\sqrt{3}\gamma_{M2}}$$

where

$A_{v,net} = A_v - 2n_1 d_0 t_p$

Block shear resistance:

$$V_{Rd,b} = \frac{0.5 f_{u,p} A_{nt}}{\gamma_{M2}} + \frac{f_{y,p}}{\sqrt{3}} \frac{A_{nv}}{\gamma_{M0}}$$

where

$A_{nt} = t_p(e_2 - \frac{d_0}{2})$

$A_{nv} = t_p\left(h_p - e_1 - (n_1 - 0.5)d_0\right)$

∴ Shear resistance of end plate:

$V_{Rd} = \min\left(V_{Rd,g}; V_{Rd,n}; V_{Rd,b}\right) > V_{Ed}$

<u>T-stub resistance (SCI_P358)</u>

Mode 1 complete flange yielding resistance:

$$F_{Rd,1} = \frac{(8n - 2e_w)M_{pl,Rd,u}}{2mn - e_w(m + n)}$$

where

$n = e_{min} = \min\ (e_2; e_{2,c})$

$e_w = \frac{d_w}{4}$

d_w: diameter of the washer or the width across points of the bolt or nut

$M_{pl,Rd,u}$: plastic moment resistance of the equivalent T-stub for mode 1 or mode 2

$$M_{pl,Rd,u} = \frac{0.25\Sigma l_{eff} t_p^2 f_{u,p}}{\gamma_{Mu}}$$

$l_{eff,1}$: effective length of the equivalent T-stub for Mode 1, taken as the lesser of $l_{eff,cp}$ and $l_{eff,nc}$

$l_{eff,2}$: effective length of the equivalent T-stub for Mode 2, taken as $l_{eff,nc}$

$$m = \frac{p_3 - t_{w,b1} - 2 \times 0.8 \times a\sqrt{2}}{2}$$

a: fillet weld throat thickness

Mode 2 Bolt failure with flange yielding resistance:

$$F_{Rd,2} = \frac{2M_{pl,Rd,u} + n\Sigma F_{t,Rd}}{m + n}$$

where

$$F_{t,Rd} = \frac{k_2 f_{ub} A_s}{\gamma_{M,u}}$$

$k_2 = 0.63$ for countersunk bolts

$= 0.90$ otherwise

$\gamma_{M,u} = 1.25$

Mode 3 Bolt failure resistance:

$$F_{Rd,3} = \Sigma F_{t,Rd}$$

Resistance of first row of bolt in T-stub:

$$F_{t,ep,Rd} = \min\left(F_{T,1,Rd}; F_{T,2,Rd}; F_{T,3,Rd}\right) > F_{Ed}$$

Applied tensile force:

$$F_{Ed} = \frac{M}{r}$$

where

M: nominal moment due to eccentricity

r: distance between flanges of secondary beam

<u>Stiffener resistance (SCI_P398)</u>

Design procedure for fillet weld of stiffener is same as 2.3.1 (4)

Design compressive resistance of stiffener:

$$F_{c,wc,Rd} = \frac{\omega \rho b_{eff,c,wc} t_p f_{yp}}{\gamma_{M1}}$$

where

ω: reduction factor that takes account of the interaction with shear, see SS EN1993-1-8 Table 6.3

$b_{eff,c,wc} = t_{fb} + 2s_f + 5(t_{fc} + s) + s_p$

s_f: leg length of fillet weld between the compression flange and the end plate ($\sqrt{2}a_p$)

$s_p = 2t_p$

$s = r_c$ for rolled I and H column sections

$= \sqrt{2}a_c$ for welded sections

a_c: throat thickness of the fillet weld between the stiffener and primary beam

If $\overline{\lambda_p} \leq 0.72$, $\rho = 1.0$

If $\overline{\lambda_p} > 0.72$, $\rho = \frac{\overline{\lambda_p} - 0.2}{\overline{\lambda_p^2}}$

$$\overline{\lambda_p} = 0.932\sqrt{\frac{b_{eff,c,wc} d_{wc} f_{y,wc}}{E t_{wc}^2}}$$

$d_{wc} = h_c - 2(t_{fc} + s)$

2.3.3 Example 1 – One-sided Beam-to-Beam connection with extended fin plate

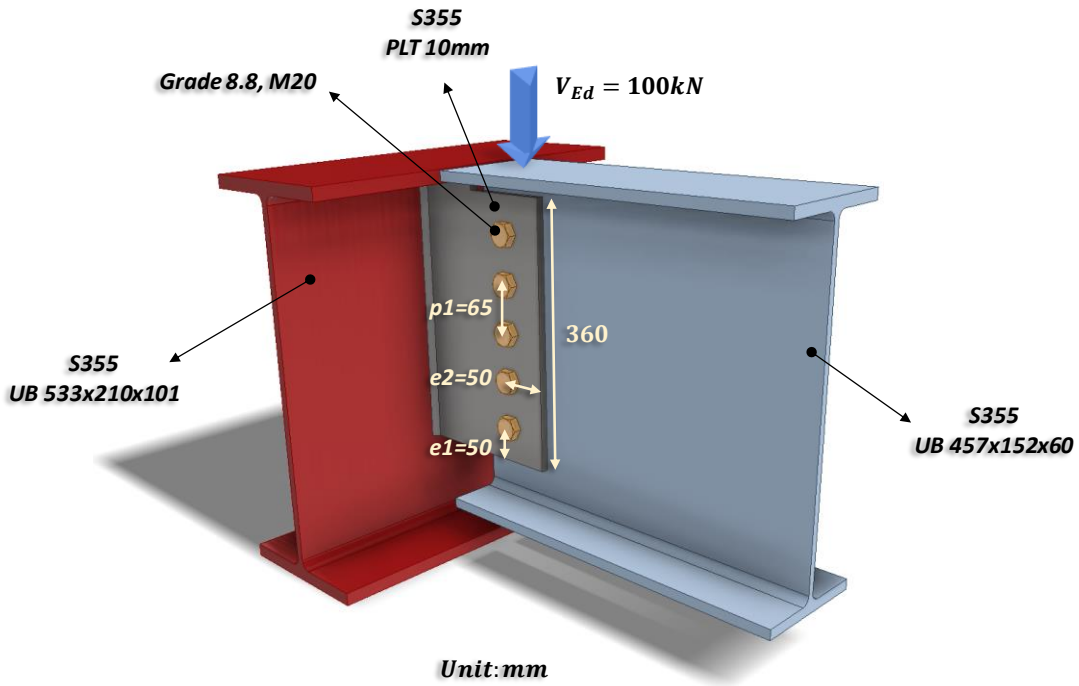

Check 1 – Bolt group resistance		
Ref	Calculations	Remark
	Bolt shear resistance: Using Gr8.8, M20 bolts with: $A_s = 245mm^2$, $f_{ub} = 800MPa$, $\alpha_v = 0.6$	
SS EN1993-1-8	Shear resistance of a single bolt: $F_{v,Rd} = \frac{\alpha_v f_{ub} A_s}{\gamma_{M2}}$ $= \frac{0.6 \times 800 \times 245}{1.25} \times 10^{-3}$ $= 94.08kN$	$\gamma_{M2} = 1.25$ (refer to NA to SS)
	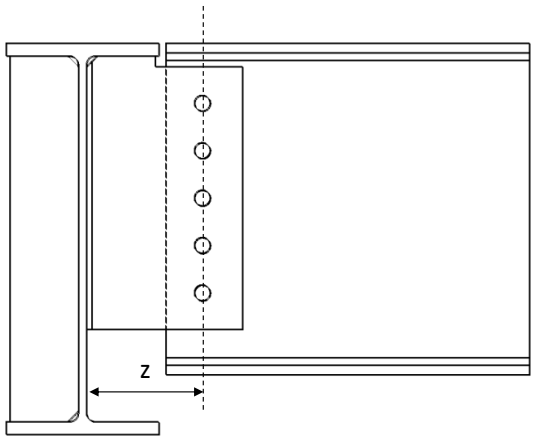	$z = 165mm$
SCI_P358 SN017	For single vertical line of bolts ($n_2 = 1$): $n_1 = 5, n = 5 \times 1 = 5$ $\alpha = 0$ $\beta = \frac{6z}{n_1(n_1+1)p_1}$ $= \frac{6 \times 165mm}{5 \times (5+1) \times 65mm}$ $= 0.51$ $V_{Rd} = \frac{nF_{V,Rd}}{\sqrt{(1+\alpha n)^2 + (\beta n)^2}}$ $= \frac{5 \times 94.08}{\sqrt{(1+0)^2 + (0.51 \times 5)^2}} \times 10^{-3}$ $= 172.41kN > V_{Ed} = 100kN$	OK!

Check 1 – Bolt group resistance		
Ref	Calculations	Remark
SCI_P358 SS EN1993-1-8	**Bolt bearing resistance in the fin plate:** For bearing resistance in vertical direction of one bolt: $k_1 = \min\left(\frac{2.8e_2}{d_o} - 1.7; \frac{1.4p_2}{d_0} - 1.7; 2.5\right)$ $= \min\left(\frac{2.8 \times 50}{22} - 1.7; 2.5\right)$ $= 2.5$ $\alpha_b = \min\left(\frac{e_1}{3d_0}; \frac{p_1}{3d_0} - \frac{1}{4}; \frac{f_{ub}}{f_{u,p}}; 1.0\right)$ $= \min\left(\frac{50}{3 \times 22}; \frac{65}{3 \times 22} - \frac{1}{4}; \frac{800}{490}; 1.0\right)$ $= 0.73$ $F_{b,ver,Rd} = \frac{k_1 \alpha_b f_{u,p} d t_p}{\gamma_{M2}}$ $= \frac{2.5 \times 0.73 \times 490 \times 20 \times 10}{1.25} \times 10^{-3}$ $= 144.03kN$ For bearing resistance in horizontal direction of one bolt: $k_1 = \min\left(\frac{2.8e_1}{d_o} - 1.7; \frac{1.4p_1}{d_0} - 1.7; 2.5\right)$ $= \min\left(\frac{2.8 \times 50}{22} - 1.7; \frac{1.4 \times 65}{22} - 1.7; 2.5\right)$ $= 2.44$ $\alpha_b = \min\left(\frac{e_2}{3d_0}; \frac{p_2}{3d_0} - \frac{1}{4}; \frac{f_{ub}}{f_{u,p}}; 1.0\right)$ $= \min\left(\frac{50}{3 \times 22}; \frac{800}{490}; 1.0\right)$ $= 0.76$	$\boldsymbol{e_1 = 50.0mm}$ $(1.2d_0 < e_1 < 4t + 40mm)$ $\boldsymbol{p_1 = 65.0mm}$ $(2.2d_0 < p_1 < 14t\ or\ 200mm)$ $\boldsymbol{e_2 = 50.0mm}$ $(1.2d_0 < e_2 < 4t + 40mm)$ $\boldsymbol{p_2 = nil}$ $(2.4d_0 < p_2 < 14t\ or\ 200mm)$

Check 1 – Bolt group resistance		
Ref	Calculations	Remark
	$F_{b,hor,Rd} = \frac{k_1 \alpha_b f_{u,p} d t_p}{\gamma_{M2}}$ $= \frac{2.44 \times 0.76 \times 490 \times 20 \times 10}{1.25} \times 10^{-3}$ $= 144.71\text{kN}$ Bolt group bearing resistance: $V_{Rd} = \frac{n}{\sqrt{\left(\frac{1+\alpha n}{F_{b,ver,Rd}}\right)^2 + \left(\frac{\beta n}{F_{b,hor,Rd}}\right)^2}}$ $= \frac{5}{\sqrt{\left(\frac{1}{144.03}\right)^2 + \left(\frac{0.51 \times 5}{144.71}\right)^2}} \times 10^{-3}$ $= 265.02kN > V_{Ed} = 100kN$	OK!
SCI_P358 SS EN1993-1-8	**Bolt bearing resistance in secondary beam web:** Vertical bearing resistance: $k_1 = \min\left(\frac{2.8e_{2,b}}{d_o} - 1.7; \frac{1.4p_2}{d_0} - 1.7; 2.5\right)$ $= \min\left(\frac{2.8 \times 50}{22} - 1.7; 2.5\right)$ $= 2.5$ $\alpha_b = \min\left(\frac{e_{1,b}}{3d_0}; \frac{p_1}{3d_0} - \frac{1}{4}; \frac{f_{ub}}{f_{u,b1}}; 1.0\right)$ $= \min\left(\frac{78.3}{3 \times 22}; \frac{65}{3 \times 22} - \frac{1}{4}; \frac{800}{490}; 1.0\right)$ $= 0.73$ $F_{b,ver,Rd} = \frac{k_1 \alpha_b f_{u,b1} d t_{w,b1}}{\gamma_{M2}}$ $= \frac{2.5 \times 0.73 \times 490 \times 20 \times 8.1}{1.25} \times 10^{-3}$ $= 116.66kN$	$\boldsymbol{e_{1,b} = 78.3mm}$ $\boldsymbol{e_{2,b} = 50.0mm}$

Check 1 – Bolt group resistance		
Ref	Calculations	Remark
	Horizontal bearing resistance: $k_1 = \min\left(\frac{2.8e_{1,b}}{d_o} - 1.7; \frac{1.4p_1}{d_0} - 1.7; 2.5\right)$ $= \min\left(\frac{2.8 \times 97.3}{22} - 1.7; \frac{1.4 \times 65}{22} - 1.7; 2.5\right)$ $= 2.44$ $\alpha_b = \min\left(\frac{e_{2,b}}{3d_0}; \frac{p_2}{3d_0} - \frac{1}{4}; \frac{f_{ub}}{f_{u,b1}}; 1.0\right)$ $= \min\left(\frac{50}{3 \times 22}; \frac{800}{490}; 1.0\right)$ $= 0.76$ $F_{b,hor,Rd} = \frac{k_1 \alpha_b f_{u,b1} d t_{w,b1}}{\gamma_{M2}}$ $= \frac{2.44 \times 0.76 \times 490 \times 20 \times 8.1}{1.25} \times 10^{-3}$ $= 117.21kN$ Bolt group bearing resistance: $V_{Rd} = \frac{n}{\sqrt{\left(\frac{1+\alpha n}{F_{b,ver,Rd}}\right)^2 + \left(\frac{\beta n}{F_{b,hor,Rd}}\right)^2}}$ $= \frac{5}{\sqrt{\left(\frac{1}{116.66}\right)^2 + \left(\frac{0.52 \times 5}{117.21}\right)^2}} \times 10^{-3}$ $= 214.67kN > V_{Ed} = 100kN$	OK!

Check 2 – Fin plate resistance		
Ref	Calculations	Remark
SS EN1993-1-8 SCI_P358	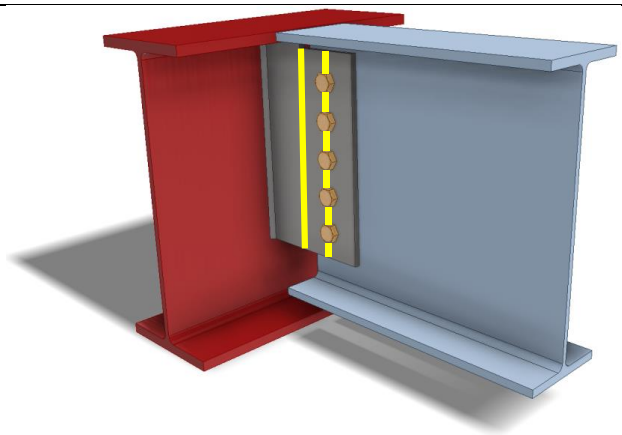 **Fin-plate shear resistance (gross section):** $t_p = 10mm < 16mm$ $\therefore f_{y,p} = 355MPa$ Gross section shear resistance: $V_{Rd,g} = \frac{h_p t_p}{1.27} \frac{f_{y,p}}{\sqrt{3}\gamma_{M0}}$ $= \frac{360 \times 10}{1.27} \times \frac{355}{\sqrt{3}} \times 10^{-3}$ $= 580.99kN$ **Fin-plate shear resistance (net section):** $A_{v,net} = t_p(h_p - n_1 d_0)$ $= 10 \times (360 - 5 \times 22)$ $= 2500mm^2$ Net area shear resistance: $V_{Rd,n} = \frac{A_{v,net} f_{u,p}}{\sqrt{3}\gamma_{M2}}$ $= 2500 \times \frac{490}{\sqrt{3} \times 1.25} \times 10^{-3}$ $= 565.80kN$	$h_p = 360mm$ $\gamma_{M0} = 1.0$ (SS EN1993-1-1)

Check 2 – Fin plate resistance		
Ref	Calculations	Remark
	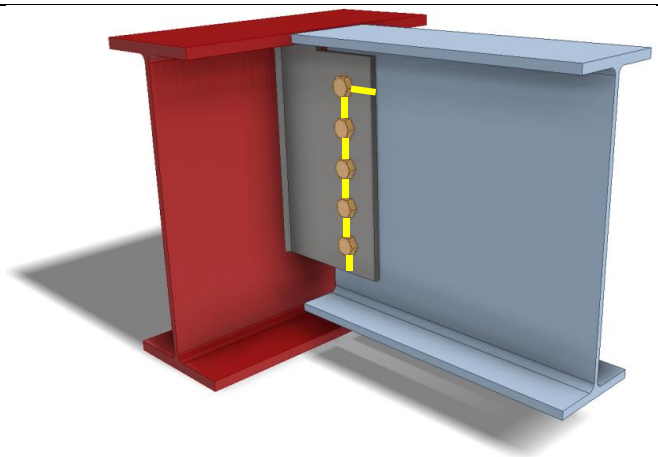	
	Fin-plate shear resistance (block shear): For single vertical line of bolts ($n_2 = 1$): Net area subject to tension: $A_{nt} = t_p\left(e_2 - \frac{d_0}{2}\right)$ $= 10 \times (50 - \frac{22}{2})$ $= 390mm^2$ Net area subject to shear: $A_{nv} = t_p(h_p - e_1 - (n_1 - 0.5)d_0)$ $= 10 \times (360 - 50 - (5 - 0.5) \times 22)$ $= 2110mm^2$ $V_{Rd,b} = \left(\frac{0.5 f_{u,p} A_{nt}}{\gamma_{M2}} + \frac{f_{y,p}}{\sqrt{3}}\frac{A_{nv}}{\gamma_{M0}}\right)$ $= \left(\frac{0.5 \times 490 \times 390}{1.25} + \frac{355}{\sqrt{3}}\frac{2110}{1.0}\right) \times 10^{-3}$ $= 508.90kN$ $V_{Rd,min} = \min(V_{Rd,g}; V_{Rd,n}; V_{Rd,b})$ $= \min(580.99kN; 565.80kN; 508.90kN)$ $= 508.90kN > V_{Ed} = 100kN$	OK!

Check 2 – Fin plate resistance		
Ref	Calculations	Remark
SCI_P358 SS EN1993-1-8	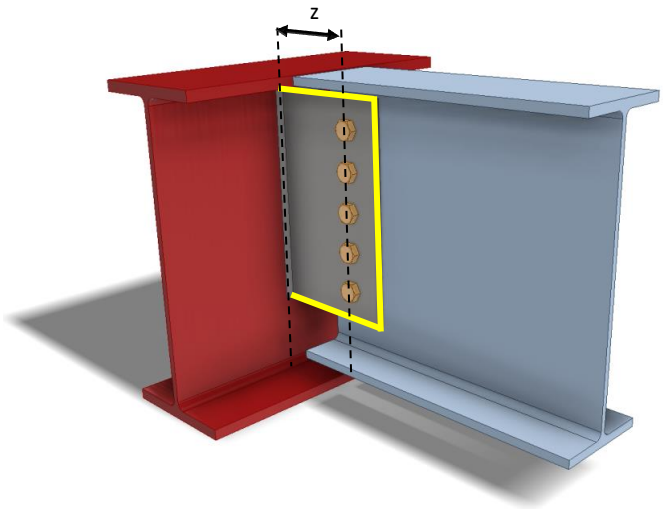 **Fin-plate bending:** $h_p = 360mm < 2.73z = 462.46mm$ $\therefore V_{Rd} = \frac{W_{el,p}}{z}\frac{f_{y,p}}{\gamma_{M0}}$ $W_{el,p} = \frac{t_p h_p^2}{6}$ $= \frac{10 \times 360^2}{6}$ $= 216000mm^3$ Bending resistance of fin plate: $V_{Rd} = \frac{W_{el,p} f_{y,p}}{z\gamma_{M0}}$ $= \frac{216000 \times 355}{165 \times 1.0}$ $= 464.73kN > V_{Ed} = 100kN$ **Lateral torsional buckling:** $z_p = 165mm > \frac{t_p}{0.15} = 66.67mm$ ∴The fin plate is classified as **Long fin plate**	OK!

Check 2 – Fin plate resistance		
Ref	Calculations	Remark
	Raidus of gyration: $i = \frac{t_p}{\sqrt{12}} = \frac{10}{\sqrt{12}} = 2.89$ Slenderness of the fin plate: $\overline{\lambda_{LT}} = \frac{L_{cr}}{\pi i}\sqrt{\frac{f_y}{E}}$ $= \frac{165}{\pi \times 2.89}\left(\frac{355}{210000}\right)^{\frac{1}{2}}$ $= 0.748$ LTB reduction factor: $\therefore \chi_{LT} = 0.69$ $V_{Rd} = \min\left(\frac{W_{el,p}}{z}\frac{\chi_{LT} f_{y,p}}{0.6\gamma_{M1}}; \frac{W_{el,p}}{z}\frac{f_{y,p}}{\gamma_{M0}}\right)$ $= \min\left(\frac{216000 \times 0.69 \times 355}{165 \times 0.6 \times 1.0}; \frac{216000 \times 355}{165 \times 1.0}\right) \times 10^{-3}$ $= 464.73kN > V_{Ed} = 100kN$	χ_{LT} is calculated based on imperfection class c $\gamma_{M1} = 1.0$ (SS EN1993-1-1) OK!

Note:

Lateral restraint should be provided for primary beam with long fin plate to prevent lateral torsional buckling.

Check 3 – Secondary beam web resistance		
Ref	Calculations	Remark
SCI_P358 SS EN1993-1-8	**Beam web shear resistance (gross section):** For unnotched beams (UB457x152x60): $A_V = A_g - 2b_{b1}t_{f,b1} + (t_{w,b1} + 2r_{b1})t_{f,b1}$ $= 7620 - 2 \times 152.9 \times 13.3 + (8.1 + 2 \times 10.2) \times 13.3$ $= 3931.91mm^2$ $V_{Rd,g} = V_{pl,Rd} = \frac{A_V f_{y,b1}}{\sqrt{3}\gamma_{M0}}$ $= 3931.91 \times \frac{355}{\sqrt{3} \times 1.0} \times 10^{-3}$ $= 805.88kN$ **Beam web shear resistance (net section):** $A_{V,net} = A_V - n_1 d_0 t_{w,b1}$ $= 3931.91 - 5 \times 22 \times 8.1$ $= 3040.9mm^2 1$ $V_{Rd,n} = \frac{A_{V,net} f_{u,b1}}{\sqrt{3}\gamma_{M2}}$ $= 3040.91 \times \frac{490}{\sqrt{3} \times 1.25} \times 10^{-3}$ $= 688.22kN$ $V_{Rd,min} = \min(V_{Rd,g}; V_{Rd,n})$ $= \min(805.88kN; 688.22kN)$ $= 688.22kN > V_{Ed} = 100kN$	OK!

Check 3 – Secondary beam web resistance		
Ref	Calculations	Remark
	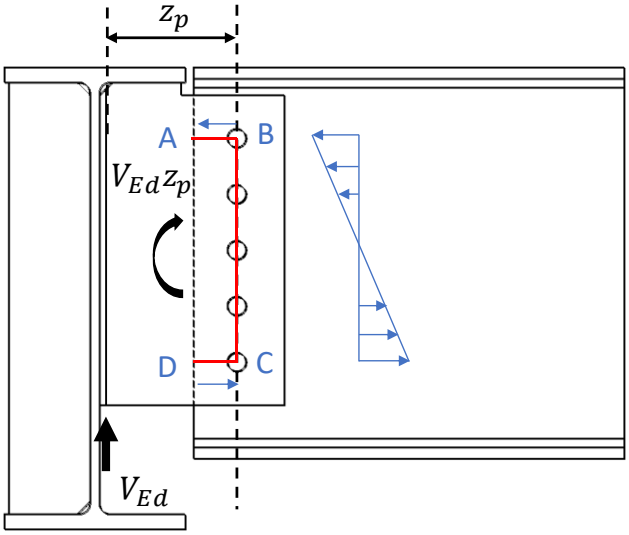	
SCI_P358	**Shear and bending interaction of secondary beam web:** For long fin plate, shear and bending moment interaction check is necessary For single vertical line of bolts ($n_2 = 1$): $V_{pl,AB,Rd} = \frac{t_{w,b1}e_{2,b} \times f_{y,b1}}{\sqrt{3}\gamma_{M0}}$ $= \frac{8.1 \times 50 \times 355}{\sqrt{3} \times 1.0} \times 10^{-3}$ $= 83.01kN$ $V_{BC,Ed} = \frac{V_{Ed}(n_1 - 1)p_1}{h_{b1}}$ $= 100 \times (5 - 1) \times \frac{65}{454.6} \times 10^{-3}$ $= 57.19kN$ $V_{pl,BC,Rd} = \frac{t_{w,b1}(n_1 - 1)P_1 \times f_{y,b1}}{\sqrt{3}\gamma_{M0}}$ $= 8.1 \times (5 - 1) \times 65 \times \frac{355}{\sqrt{3}} \times 10^{-3}$ $= 431.64kN$	

Check 3 – Secondary beam web resistance		
Ref	Calculations	Remark
	$V_{BC,Ed} < \frac{V_{pl,BC,Rd}}{2}$ $\therefore Low\ shear$ $M_{c,BC,Rd} = \frac{f_{y,b1} t_{w,b1}}{6\gamma_{M0}} \left((n_1 - 1)p_1\right)^2$ $= 355 \times \frac{8.1}{6} \times \left((5-1) \times 65\right)^2 \times 10^{-6}$ $= 32.40 kNm$ For a single vertical line of bolts ($n_2 = 1$): $V_{Rd} = \frac{M_{c,BC,Rd} + V_{pl,AB,Rd}(n_1 - 1)p_1}{z_p}$ $= \frac{32.40 + 83.01 \times (5-1) \times 65}{165}$ $= 131.00 kN > V_{Ed} = 100 kN$	OK!

Check 4 – Welds (fillet weld)		
Ref	Calculations	Remark
	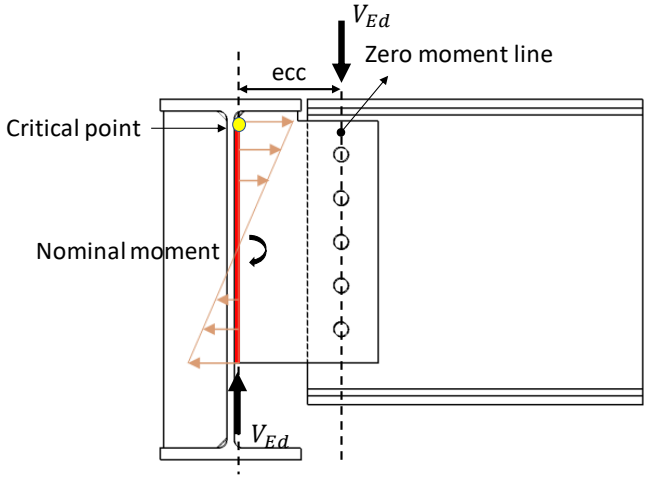	
SS EN1993-1-8	The weld connection is assumed to be stiffer than the bolt connection, hence the fillet weld for fin plate needs to be designed for nominal moment. Unit throat area: $A_u = 2d = 2 \times 345 = 690mm$ Eccentricity between weld and line of action: $ecc = z = 165mm$ Nominal moment due to eccentricity: $M = V_{Ed}ecc$ $= 100 \times 0.165$ $= 16.5kNm$ Polar moment of inertia: $J = \frac{d^3}{12} = \frac{345^2}{12} = 3421969mm^3$ **Critical point:** Vertical stress: $\tau_v = \frac{V_{Ed}}{A_u}$ $= \frac{100}{690}$ $= 0.145kN/mm$	Length of the fillet welds: $d = 345mm$

Check 4 – Welds (fillet weld)		
Ref	Calculations	Remark
	Transverse stress: $\tau_h = \frac{Mr_{zv}}{2J}$ $= \frac{16500 \times 172.5}{3421969 \times 2}$ $= 0.416kN/mm$ Resultant stress: $\tau_r = \sqrt{\tau_v^2 + \tau_h^2}$ $= \sqrt{0.145^2 + 0.416^2}$ $= 0.44kN/mm$	Vertical distance between critical point and centroid: $r_{zv} = \frac{d}{2}$ $= 172.5mm$
SCI_P363	Based on SCI_P363 design weld resistance for S355 fillet weld: Choose fillet weld with 5mm leg length, 3.5mm throat thickness and grade S355 which matching the beam steel grade: Longitudinal resistance: $F_{w,L,Rd} = 0.84kN/mm$ Transverse resistance: $F_{w,T,Rd} = 1.03kN/mm$	
	Simplified method: $F_{w,L,Rd} = 0.84kN/mm > \tau_{Ed} = 0.44kN/mm$	OK!
	Directional method: $SF = \left(\frac{\tau_{v,Ed}}{F_{w,L,Rd}}\right)^2 + \left(\frac{\tau_{h,Ed}}{F_{w,T,Rd}}\right)^2$ $= \left(\frac{0.145}{0.84}\right)^2 + \left(\frac{0.416}{1.03}\right)^2$ $= 0.19 < 1.00$	OK!

Check 5 – Local shear and punching resistance of primary beam (one 2nd beam)		
Ref	Calculations	Remark
SCI_P358 SS EN1993-1-8	Local shear resistance of the primary beam (UB533x210x101) web: $A_v = h_p t_2$ $= 360 \times 10.8$ $= 3888mm^2$ $F_{Rd} = \frac{A_v f_{y,2}}{\sqrt{3}\gamma_{M0}}$ $= \frac{3888 \times 355}{\sqrt{3} \times 1.0} \times 10^{-3}$ $= 796.88kN > \frac{V_{Ed}}{2} = 50kN$ Punching shear resistance: $t_p = 10mm$ $\frac{t_2 f_{u,2}}{f_{y,p}\gamma_{M2}} = \frac{10.8 \times 490}{355 \times 1.25} = 11.93mm > t_p = 10mm$	$t_2 = 10.8mm$ $f_{y,2} = 355MPa$ OK! OK!

Note:

If the resistance of the connection is insufficient, stiffener may be used to strengthen the fin plate connection. Details of strengthening refer to Section 2.5.

Check 6 – Tying resistance of the connection		
Ref	Calculations	Remark
	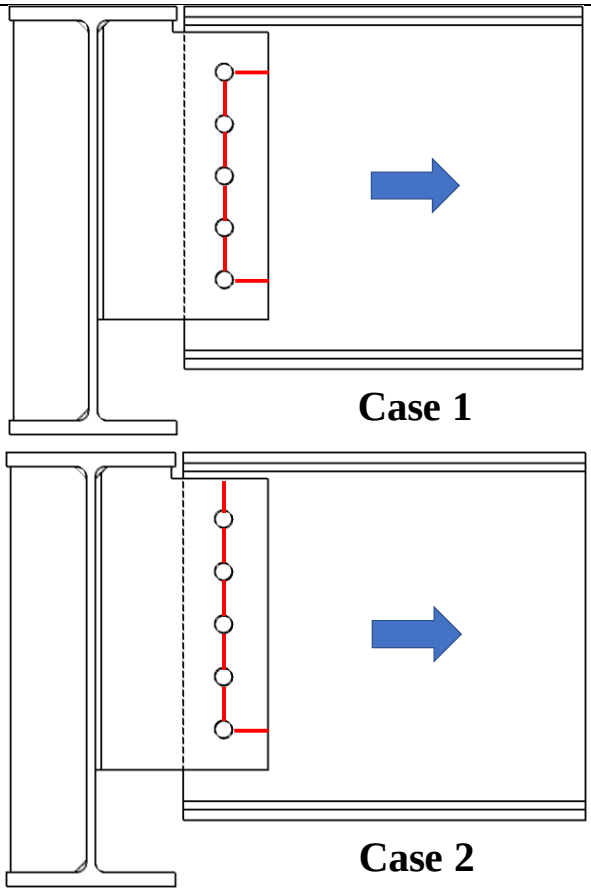	
SCI_P358	**Tension resistance of fin plate:** For case 1: Net area subject to tension: $A_{nt} = t_p\left((n_1 - 1)p_1 - (n_1 - 1)d_0\right)$ $= 10 \times \left((5 - 1) \times 65 - (5 - 1) \times 22\right)$ $= 1720mm^2$ Net area subject to shear: $A_{nv} = 2t_p\left(e_2 - \frac{d_0}{2}\right)$ $= 2 \times 10 \times \left(50 - \frac{22}{2}\right)$ $= 780mm^2$	

Check 6 – Tying resistance of the connection		
Ref	Calculations	Remark
	Block tearing tension resistance: $F_{Rd,b} = \frac{f_{u,p}A_{nt}}{\gamma_{Mu}} + \frac{f_{y,p}}{\sqrt{3}}\frac{A_{nv}}{\gamma_{M0}}$ $= \frac{490 \times 1720}{1.25 \times 10^3} + \frac{355 \times 780}{\sqrt{3} \times 1.0 \times 10^3}$ $= 834.10kN$ For case 2: Net area subject to tension: $A_{nt} = t_p\big((n_1 - 1)p_1 - (n_1 - 0.5)d_0 + e_1\big)$ $= 10 \times \big((5 - 1) \times 65 - (5 - 0.5) \times 22 + 50\big)$ $= 2110mm^2$ Net area subject to shear: $A_{nv} = t_p\left(e_2 - \frac{d_0}{2}\right)$ $= 10 \times \left(50 - \frac{22}{2}\right)$ $= 390mm^2$ Block tearing tension resistance: $F_{Rd,b} = \frac{f_{u,p}A_{nt}}{\gamma_{Mu}} + \frac{f_{y,p}}{\sqrt{3}}\frac{A_{nv}}{\gamma_{M0}}$ $= \frac{490 \times 2110}{1.25 \times 10^3} + \frac{355 \times 390}{\sqrt{3} \times 1.0 \times 10^3}$ $= 907.05kN$	
	Net section tension resistance: $F_{Rd,n} = \frac{0.9A_{net,p}f_{u,p}}{\gamma_{Mu}}$ $= \frac{0.9 \times 2500 \times 490}{1.25 \times 10^3}$ $= 882kN$	$A_{net,p} = A_{v,net}$ $= 2500mm^2$

Check 6 – Tying resistance of the connection		
Ref	Calculations	Remark
	Bolt shear resistance: $F_{Rd,u} = nF_{v,u}$ $= 5 \times 94.08$ $= 470.4kN$ Bolt bearing in fin plate: $F_{Rd,u} = nF_{b,hor,Rd,u}$ $= 5 \times 144.71$ $= 723.55kN$ Tying resistance of fin plate and bolt: $F_{t,Rd,p} = \min(834.10; 907.05; 882; 470.4; 723.55)$ $= 470.4kN$ 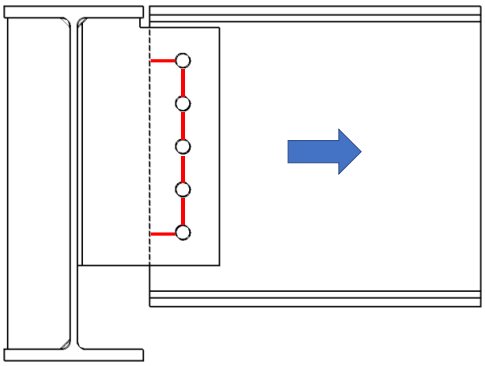 **Tension resistance of beam web:** Net area subject to tension: $A_{nt} = t_{w,b}\big((n_1 - 1)p_1 - (n_1 - 1)d_0\big)$ $= 8.1 \times \big((5 - 1) \times 65 - (5 - 1) \times 22\big)$ $= 1393.2mm^2$ Net area subject to shear: $A_{nv} = 2t_{w,b}\left(e_2 - \frac{d_0}{2}\right)$ $= 2 \times 8.1 \times \left(50 - \frac{22}{2}\right)$ $= 631.8mm^2$	

Check 6 – Tying resistance of the connection		
Ref	Calculations	Remark
	Block tearing tension resistance: $F_{Rd,b} = \frac{f_{u,p}A_{nt}}{\gamma_{Mu}} + \frac{f_{y,p}}{\sqrt{3}}\frac{A_{nv}}{\gamma_{M0}}$ $= \frac{490 \times 1393.2}{1.25 \times 10^3} + \frac{355 \times 631.8}{\sqrt{3} \times 1.0 \times 10^3}$ $= 675.62kN$	
	Net section tension resistance: $F_{Rd,n} = \frac{0.9A_{net,p}f_{u,p}}{\gamma_{Mu}}$ $= \frac{0.9 \times 3040.9 \times 490}{1.25 \times 10^3}$ $= 1072.82kN$	$A_{net,p} = A_{v,net}$ $= 3040.9mm^2$
	Bolt bearing in beam web: $F_{Rd,u} = nF_{b,hor,Rd,u}$ $= 5 \times 117.21$ $= 586.05kN$	
	Tying resistance of the connection: $F_{t,Rd} = \min(470.4; 675.62; 1072.82; 586.05)$ $= 470.4kN$	

Note: There is a specific requirement to provide horizontal ties for robustness in the Eurocodes. Each tie member, including its end connections, should be capable of sustaining a design tensile load for the accidental limit state. The magnitudes of *tie force* are calculated from EN 1991-1-7.

For this type of connection, under large shear force, it may cause the primary beam web to buckle as shown in the figure above. Moreover, this one-sided connection will generate extra torsion on the primary beam. If the primary beam is insufficient to take the extra torsion or suffer from beam web buckling, back side stiffener is needed.

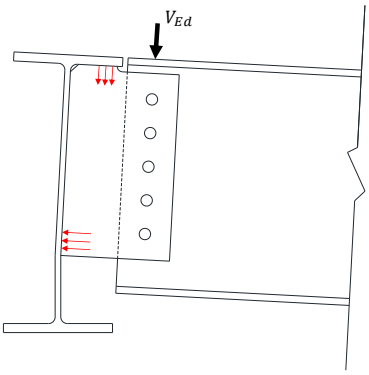

2.3.4 Example 2 – Double-sided Beam-to-Beam connection with extended fin plates

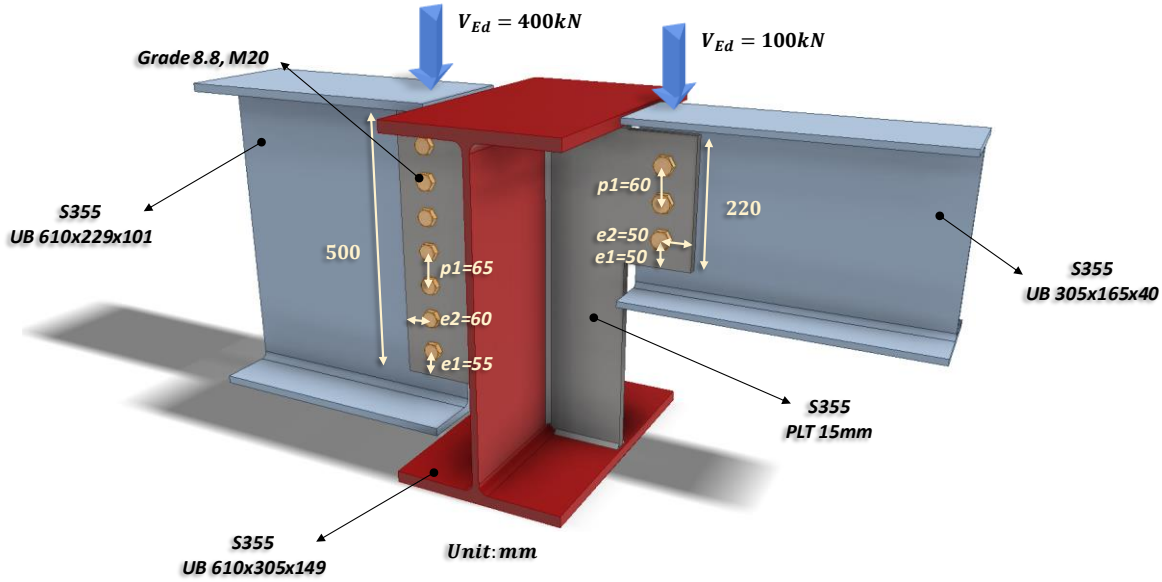

Check 1L – Bolt group resistance (UB610x229x101)		
Ref	Calculations	Remark
	Bolt resistance: Using Gr8.8, M20 bolts with: $A_s = 245mm^2; f_{ub} = 800MPa;$ $\alpha_v = 0.6$ 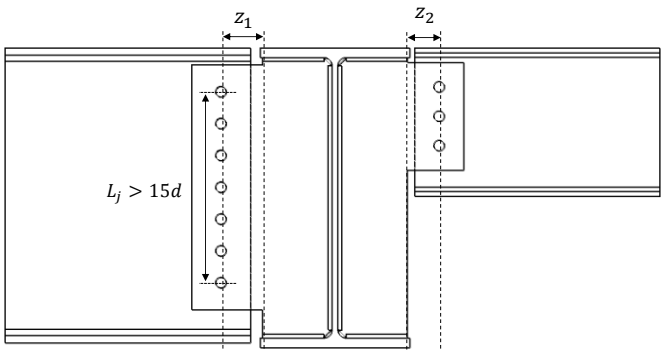 	In this example, it is assumed that the extended fin plate is stiff enough to provide support within the welded region. Hence, the value "z" is taken from the bolt line to the line that the cross section of fin plate changed.
SS EN1993-1-8	Shear resistance of a bolt: As the distance between the centres of the end fasters: $L_j = 390mm > 15d = 300mm$ ∴Reduction factor to cater long joints effect is applied $\beta_{Lj} = \left(1 - \frac{L_j - 15d}{200d}\right)$ $= \left(1 - \frac{390 - 15 \times 20}{200 \times 20}\right)$ $= 0.9775$ $F_{v,Rd} = \frac{\alpha_v f_{ub} A_s}{\gamma_{M2}} \beta_{Lj}$ $= \frac{0.6 \times 800 \times 245}{1.25} \times 0.9775 \times 10^{-3}$ $= 91.96kN$	$\gamma_{M2} = 1.25$ (refer to NA to SS)

Check 1L – Bolt group resistance (UB610x229x101)		
Ref	Calculations	Remark
SCI_P358 SN017	For single vertical line of bolts ($n_2 = 1$): $n_1 = 7, n = 7 \times 1 = 7$ $\alpha = 0$ $\beta = \frac{6z}{n_1(n_1+1)p_1}$ $= \frac{6 \times 80mm}{7 \times (7+1) \times 65mm}$ $= 0.13$ $V_{Rd} = \frac{nF_{V,Rd}}{\sqrt{(1+\alpha n)^2 + (\beta n)^2}}$ $= \frac{7 \times 91.96}{\sqrt{(1+0)^2 + (0.13 \times 7)^2}} \times 10^{-3}$ $= 462.38kN > V_{Ed} = 400kN$	OK!
SCI_P358 SS EN1993-1-8	**Bolt bearing resistance in the fin plate:** For bearing resistance in vertical direction of one bolt: $k_1 = \min\left(\frac{2.8e_2}{d_o} - 1.7; \frac{1.4p_2}{d_0} - 1.7; 2.5\right)$ $= \min\left(\frac{2.8 \times 60}{22} - 1.7; 2.5\right)$ $= 2.5$ $\alpha_b = \min\left(\frac{e_1}{3d_0}; \frac{p_1}{3d_0} - \frac{1}{4}; \frac{f_{ub}}{f_{u,p}}; 1.0\right)$ $= \min\left(\frac{55}{3 \times 22}; \frac{65}{3 \times 22} - \frac{1}{4}; \frac{800}{490}; 1.0\right)$ $= 0.73$	$\boldsymbol{e_1 = 55.0mm}$ $(1.2d_0 < e_1 < 4t + 40mm)$ $\boldsymbol{p_1 = 65.0mm}$ $(2.2d_0 < p_1 < 14t\ or\ 200mm)$ $\boldsymbol{e_2 = 60.0mm}$ $(1.2d_0 < e_2 < 4t + 40mm)$ $\boldsymbol{p_2 = nil}$ $(2.4d_0 < p_2 < 14t\ or\ 200mm)$

Check 1L – Bolt group resistance (UB610x229x101)		
Ref	Calculations	Remark
	$F_{b,ver,Rd} = \frac{k_1 \alpha_b f_{u,p} d t_p}{\gamma_{M2}}$ $= \frac{2.5 \times 0.73 \times 490 \times 20 \times 15}{1.25} \times 10^{-3}$ $= 216.05kN$ For bearing resistance in horizontal direction of one bolt: $k_1 = \min\left(\frac{2.8e_1}{d_o} - 1.7; \frac{1.4p_1}{d_0} - 1.7; 2.5\right)$ $= \min\left(\frac{2.8 \times 55}{22} - 1.7; \frac{1.4 \times 65}{22} - 1.7; 2.5\right)$ $= 2.44$ $\alpha_b = \min\left(\frac{e_2}{3d_0}; \frac{p_2}{3d_0} - \frac{1}{4}; \frac{f_{ub}}{f_{u,p}}; 1.0\right)$ $= \min\left(\frac{60}{3 \times 22}; \frac{800}{490}; 1.0\right)$ $= 0.91$ $F_{b,hor,Rd} = \frac{k_1 \alpha_b f_{u,p} d t_p}{\gamma_{M2}}$ $= \frac{2.44 \times 0.91 \times 490 \times 20 \times 15}{1.25} \times 10^{-3}$ $= 260.47\text{kN}$ Bolt group bearing resistance: $V_{Rd} = \frac{n}{\sqrt{\left(\frac{1+\alpha n}{F_{b,ver,Rd}}\right)^2 + \left(\frac{\beta n}{F_{b,hor,Rd}}\right)^2}}$ $= \frac{7}{\sqrt{\left(\frac{1}{216.05}\right)^2 + \left(\frac{0.13 \times 7}{260.47}\right)^2}} \times 10^{-3}$ $= 1200.78kN > V_{Ed} = 400kN$	OK!

Check 1L – Bolt group resistance (UB610x229x101)		
Ref	Calculations	Remark
SCI_P358 SS EN1993-1-8	**Bolt bearing resistance in secondary beam web:** Vertical bearing resistance: $k_1 = \min\left(\frac{2.8e_{2,b}}{d_o} - 1.7; \frac{1.4p_2}{d_0} - 1.7; 2.5\right)$ $= \min\left(\frac{2.8 \times 60}{22} - 1.7; 2.5\right)$ $= 2.5$ $\alpha_b = \min\left(\frac{e_{1,b}}{3d_0}; \frac{p_1}{3d_0} - \frac{1}{4}; \frac{f_{ub}}{f_{u,b1}}; 1.0\right)$ $= \min\left(\frac{106.3}{3 \times 22}; \frac{65}{3 \times 22} - \frac{1}{4}; \frac{800}{490}; 1.0\right)$ $= 0.73$ $F_{b,ver,Rd} = \frac{k_1 \alpha_b f_{u,b1} d t_{w,b1}}{\gamma_{M2}}$ $= \frac{2.44 \times 0.73 \times 490 \times 20 \times 10.5}{1.25} \times 10^{-3}$ $= 151.23kN$ Horizontal bearing resistance: $k_1 = \min\left(\frac{2.8e_{1,b}}{d_o} - 1.7; \frac{1.4p_1}{d_0} - 1.7; 2.5\right)$ $= \min\left(\frac{2.8 \times 106.3}{22} - 1.7; \frac{1.4 \times 65}{22} - 1.7; 2.5\right)$ $= 2.44$ $\alpha_b = \min\left(\frac{e_{2,b}}{3d_0}; \frac{p_2}{3d_0} - \frac{1}{4}; \frac{f_{ub}}{f_{u,b1}}; 1.0\right)$ $= \min\left(\frac{60}{3 \times 22}; \frac{800}{510}; 1.0\right)$ $= 0.91$	$\boldsymbol{e_{1,b} = 106.3mm}$ $\boldsymbol{e_{2,b} = 60.0mm}$ $t_{w,b1} = \boldsymbol{10.8mm}$

Check 1L – Bolt group resistance (UB610x229x101)		
Ref	Calculations	Remark
	$F_{b,hor,Rd} = \frac{k_1 \alpha_b f_{u,b1} d t_{w,b1}}{\gamma_{M2}}$ $= \frac{2.44 \times 0.91 \times 490 \times 20 \times 10.5}{1.25} \times 10^{-3}$ $= 182.33kN$ Bolt group bearing resistance: $V_{Rd} = \frac{n}{\sqrt{\left(\frac{1+\alpha n}{F_{b,ver,Rd}}\right)^2 + \left(\frac{\beta n}{F_{b,hor,Rd}}\right)^2}}$ $= \frac{7}{\sqrt{\left(\frac{1}{157.40}\right)^2 + \left(\frac{0.13 \times 7}{189.77}\right)^2}} \times 10^{-3}$ $= 840.55kN > V_{Ed} = 400kN$	OK!

Check 2L – Fin plate resistance (UB610x229x101)		
Ref	Calculations	Remark
SS EN1993-1-8 SCI_P358	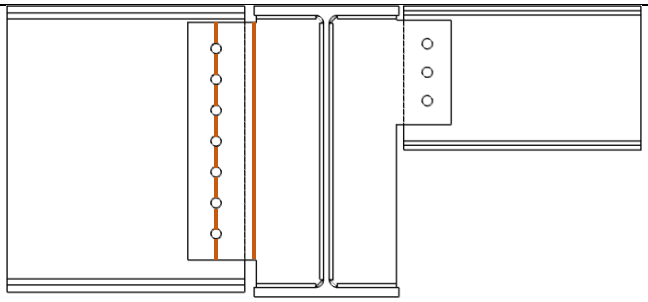 **Fin-plate shear resistance (gross section):** $t_p = 15mm < 16mm$ $\therefore f_{y,p} = 355MPa$ Gross section shear resistance of fin plate: $V_{Rd,g} = \frac{h_p t_p}{1.27} \frac{f_{y,p}}{\sqrt{3}\gamma_{M0}}$ $= \frac{500 \times 15}{1.27} \times \frac{355}{\sqrt{3}} \times 10^{-3}$ $= 1210.39kN$ **Fin plate shear resistance (net section):** $A_{v,net} = t_p(h_p - n_1 d_0)$ $= 15 \times (550 - 7 \times 22)$ $= 5190mm^2$ Net area shear resistance of fin plate: $V_{Rd,n} = \frac{A_{v,net} f_{u,p}}{\sqrt{3}\gamma_{M2}}$ $= 5190 \times \frac{490}{\sqrt{3} \times 1.25} \times 10^{-3}$ $= 1174.61kN$	$h_p = 500mm$ $\gamma_{M0} = 1.0$ (SS EN1993-1-1)

Check 2L – Fin plate resistance (UB610x229x101)		
Ref	Calculations	Remark
	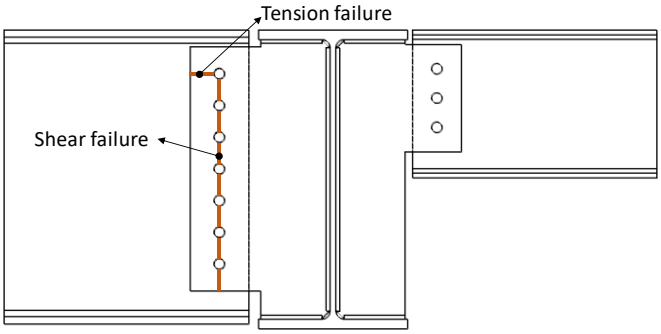 **Fin-plate shear resistance (block shear):** For single vertical line of bolts ($n_2 = 1$): Net area subject to tension: $A_{nt} = t_p\left(e_2 - \frac{d_0}{2}\right)$ $= 15 \times (60 - \frac{22}{2})$ $= 735mm^2$ Net area subject to shear: $A_{nv} = t_p(h_p - e_1 - (n_1 - 0.5)d_0)$ $= 15 \times (500 - 55 - (7 - 0.5) \times 22)$ $= 4530mm^2$ $V_{Rd,b} = \left(\frac{0.5 f_{u,p} A_{nt}}{\gamma_{M2}} + \frac{f_{y,p}}{\sqrt{3}}\frac{A_{nv}}{\gamma_{M0}}\right)$ $= \left(\frac{0.5 \times 490 \times 735}{1.25} + \frac{355}{\sqrt{3}}\frac{4530}{1.0}\right) \times 10^{-3}$ $= 1072.53kN$ $V_{Rd,min} = \min(V_{Rd,g}; V_{Rd,n}; V_{Rd,b})$ $= \min(1210.39kN; 1174.61kN; 1072.53kN)$ $= 1072.53kN > V_{Ed} = 400kN$	OK!

Check 2L – Fin plate resistance (UB610x229x101)		
Ref	Calculations	Remark
SCI_P358 SS EN1993-1-8	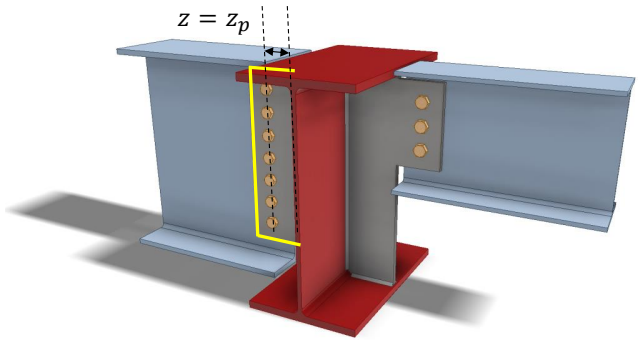 **Fin plate bending:** $h_p = 500mm > 2.73z = 218.4mm$ $\therefore V_{Rd} = \infty$ **Lateral torsional buckling:** $z_p = 80.0mm < \frac{t_p}{0.15} = 100mm$ ∴The fin plate is classified as **Short fin plate** $W_{el,p} = \frac{t_p h_p^2}{6}$ $= \frac{15 \times 500^2}{6}$ $= 625000mm^3$ $V_{Rd} = \frac{W_{el,p} f_{y,p}}{z\gamma_{M0}}$ $= \frac{625000 \times 355}{80 \times 1.0} \times 10^{-3}$ $= 2773.44kN > V_{Ed} = 400kN$	OK!

Check 3L – Secondary beam web resistance (UB610x229x101)		
Ref	Calculations	Remark
SCI_P358 SS EN1993-1-8	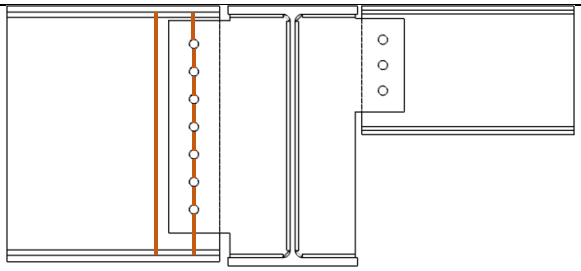 **Beam web shear resistance (gross section):** For unnotched beams (UB610x229x101): $A_V = A_g - 2b_{b1}t_{f,b1} + (t_{w,b1} + 2r_{b1})t_{f,b1}$ $= 12900 - 2 \times 227.6 \times 14.8 + (10.5 + 2 \times 12.7) \times 14.8$ $= 6694.36mm^2$ $V_{Rd,g} = V_{pl,Rd} = \frac{A_V f_{y,b1}}{\sqrt{3}\gamma_{M0}}$ $= 6694.36 \times \frac{355}{\sqrt{3} \times 1.0} \times 10^{-3}$ $= 1372.07kN$ **Beam web shear resistance (net section):** $A_{V,net} = A_V - n_1 d_0 t_{w,b1}$ $= 6694.36 - 7 \times 22 \times 10.5$ $= 5077.36mm^2$ $V_{Rd,n} = \frac{A_{V,net} f_{u,b1}}{\sqrt{3}\gamma_{M2}}$ $= 5077.36 \times \frac{490}{\sqrt{3} \times 1.25} \times 10^{-3}$ $= 1149.11kN$ $V_{Rd,min} = \min(V_{Rd,g}; V_{Rd,n})$ $= \min(1372.07kN; 1149.11kN)$ $= 1149.11kN > V_{Ed} = 400kN$	OK!

Check 3L – Secondary beam web resistance (UB610x229x101)		
Ref	Calculations	Remark
	Shear and bending interaction of secondary beam web: For short fin plate, shear and bending moment interaction check is NOT necessary	

Check 4L – Welds (C shape fillet welds)		
Ref	Calculations	Remark
SS EN1993-1-8	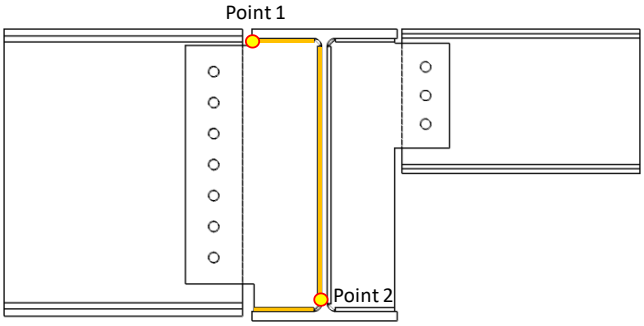 Location of centre of gravity of welds group: $\bar{x} = \frac{b^2}{(2b + d)}$ $= \frac{128.5^2}{(2 \times 128.5 + 537)}$ $= 13.73mm$ $\bar{y} = \frac{d}{2}$ $= \frac{537}{2}$ $= 268.50mm$ Unit throat area: $A_u = 2b + d$ $= 2 \times 128.5 + 537$ $= 794mm$ Moment arm between applied force and weld centre: $r = 196.27mm$ Induced moment on welds: $M = V_{Ed} \times r$ $= 400 \times 196.27$ $= 78508kNmm$	Length of the fillet welds: Horizontal length: $b = 128.5mm$ Depth: $d = 537mm$

Check 4L – Welds (C shape fillet welds)		
Ref	Calculations	Remark
	Polar moment of inertia: $J = \frac{8b^3 + 6bd^2 + d^3}{12} - \frac{b^4}{2b + d}$ $= \frac{8 \times 128.5^3 + 6 \times 128.5 \times 537 + 537^3}{12} - \frac{128.5^4}{2 \times 128.5 + 537}$ $= 32503377mm^3$ **End-point 1:** Horizontal distance from centroid: $r_{zh} = b - \bar{x}$ $= 128.5 - 13.73$ $= 114.77mm$ Vertical distance from centroid: $r_{zv} = \bar{y} + cope\ hole\ size$ $= 268.5 + 18mm$ $= 286.5mm$ Vertical stress: $\tau_v = \frac{V_{Ed}}{A_u} + \frac{Mr_{zh}}{J}$ $= \frac{400}{794} + \frac{78508 \times 114.77}{32503377}$ $= 0.781kN/mm$ Horizontal stress: $\tau_h = \frac{Mr_{zv}}{J}$ $= \frac{78508 \times 286.5}{32503377}$ $= 0.692kN/mm$ Resultant stress: $\tau_r = \sqrt{\tau_v^2 + \tau_h^2}$ $= \sqrt{0.781^2 + 0.692^2}$ $= 1.04kN/mm$	

Check 4L – Welds (C shape fillet welds)		
Ref	Calculations	Remark
	End-point 2: Horizontal distance from centroid: $r_{zh} = \bar{x} + cope\ hole\ size$ $= 13.73 + 18mm = 31.73mm$ Vertical distance from centroid: $r_{zv} = d - \bar{y}$ $= 537 - 268.5$ $= 268.5mm$ Vertical stress: $\tau_v = \frac{V_{Ed}}{A_u} + \frac{Mr_{zh}}{J}$ $= \frac{400}{794} + \frac{78508 \times 31.73}{32503377}$ $= 0.580kN/mm$ Horizontal stress: $\tau_h = \frac{Mr_{zv}}{J}$ $= \frac{78508 \times 268.5}{32503377}$ $= 0.649kN/mm$ Resultant stress: $\tau_r = \sqrt{\tau_v^2 + \tau_h^2}$ $= \sqrt{0.580^2 + 0.649^2}$ $= 0.87kN/mm$ Choose fillet weld with 6mm leg length, 4.2mm throat thickness and grade S355 which match beam steel grade: Longitudinal resistance: $F_{w,L,Rd} = 1.01kN/mm$ Transverse resistance: $F_{w,T,Rd} = 1.24kN/mm$ **Simplified method:** $F_{w,L,Rd} = 1.01kN/mm > \frac{\tau_{Ed}}{2} = 0.52kN/mm$	OK!

Check 4L – Welds (C shape fillet welds)		
Ref	Calculations	Remark
	Directional method: $SF = \left(\frac{\tau_{h,Ed}/2}{F_{w,L,Rd}}\right)^2 + \left(\frac{\tau_{v,Ed}/2}{F_{w,T,Rd}}\right)^2$ $= \left(\frac{0.39}{1.01}\right)^2 + \left(\frac{0.35}{1.24}\right)^2$ $= 0.23 < 1.00$	OK!

Check 1R – Bolt group resistance (UB305x165x40)		
Ref	Calculations	Remark
	Bolt shear resistance: Using class 8.8, M20 bolts with: $A_s = 245mm^2$, $f_{ub} = 800MPa$, $\alpha_v = 0.6$ 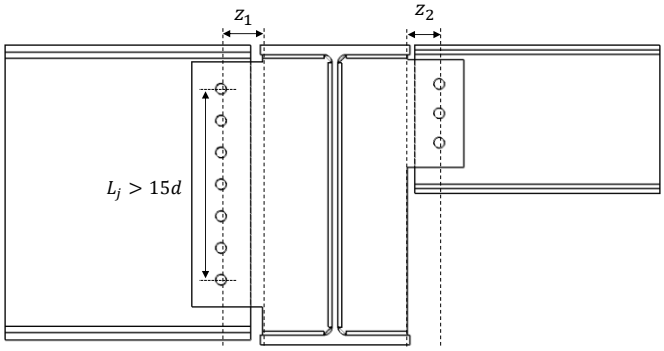 	
SS EN1993-1-8	Shear resistance of a single bolt: $F_{v,Rd} = \frac{\alpha_v f_{ub} A_s}{\gamma_{M2}}$ $= \frac{0.6 \times 800 \times 245}{1.25} \times 10^{-3}$ $= 94.08kN$	$\gamma_{M2} = 1.25$ (refer to NA to SS)
SCI_P358 SN017	For single vertical line of bolts ($n_2 = 1$): $n_1 = 3, n = 3 \times 1 = 3$ $\alpha = 0$ $\beta = \frac{6z}{n_1(n_1+1)p_1}$ $= \frac{6 \times 60mm}{3 \times (3+1) \times 60mm}$ $= 0.50$ $V_{Rd} = \frac{nF_{V,Rd}}{\sqrt{(1+\alpha n)^2 + (\beta n)^2}}$ $= \frac{3 \times 94.08}{\sqrt{(1+0)^2 + (0.5 \times 3)^2}} \times 10^{-3}$ $= 156.56kN > V_{Ed} = 100kN$	OK!

Check 1R – Bolt group resistance (UB305x165x40)		
Ref	Calculations	Remark
SCI_P358 SS EN1993-1-8	**Bolt bearing resistance in the fin plate:** For bearing resistance in vertical direction of one bolt: $k_1 = \min\left(\frac{2.8e_2}{d_o} - 1.7; \frac{1.4p_2}{d_0} - 1.7; 2.5\right)$ $= \min\left(\frac{2.8 \times 50}{22} - 1.7; 2.5\right)$ $= 2.5$ $\alpha_b = \min\left(\frac{e_1}{3d_0}; \frac{p_1}{3d_0} - \frac{1}{4}; \frac{f_{ub}}{f_{u,p}}; 1.0\right)$ $= \min\left(\frac{50}{3 \times 22}; \frac{60}{3 \times 22} - \frac{1}{4}; \frac{800}{490}; 1.0\right)$ $= 0.66$ $F_{b,ver,Rd} = \frac{k_1 \alpha_b f_{u,p} d t_p}{\gamma_{M2}}$ $= \frac{2.5 \times 0.66 \times 490 \times 20 \times 15}{1.25} \times 10^{-3}$ $= 193.77kN$ For bearing resistance in horizontal direction of one bolt: $k_1 = \min\left(\frac{2.8e_1}{d_o} - 1.7; \frac{1.4p_1}{d_0} - 1.7; 2.5\right)$ $= \min\left(\frac{2.8 \times 50}{22} - 1.7; \frac{1.4 \times 60}{22} - 1.7; 2.5\right)$ $= 2.12$ $\alpha_b = \min\left(\frac{e_2}{3d_0}; \frac{p_2}{3d_0} - \frac{1}{4}; \frac{f_{ub}}{f_{u,p}}; 1.0\right)$ $= \min\left(\frac{50}{3 \times 22}; \frac{800}{430}; 1.0\right)$ $= 0.76$	$\boldsymbol{e_1 = 50.0mm}$ $(1.2d_0 < e_1 < 4t + 40mm)$ $\boldsymbol{p_1 = 65.0mm}$ $(2.2d_0 < p_1 < 14t\ or\ 200mm)$ $\boldsymbol{e_2 = 50.0mm}$ $(1.2d_0 < e_2 < 4t + 40mm)$ $\boldsymbol{p_2 = nil}$ $(2.4d_0 < p_2 < 14t\ or\ 200mm)$

Check 1R – Bolt group resistance (UB305x165x40)		
Ref	Calculations	Remark
	$F_{b,hor,Rd} = \frac{k_1 \alpha_b f_{u,p} d t_p}{\gamma_{M2}}$ $= \frac{2.12 \times 0.76 \times 490 \times 20 \times 15}{1.25} \times 10^{-3}$ $= 188.71\text{kN}$ Bolt group bearing resistance: $V_{Rd} = \frac{n}{\sqrt{\left(\frac{1+\alpha n}{F_{b,ver,Rd}}\right)^2 + \left(\frac{\beta n}{F_{b,hor,Rd}}\right)^2}}$ $= \frac{5}{\sqrt{\left(\frac{1}{193.77}\right)^2 + \left(\frac{0.51 \times 3}{188.71}\right)^2}} \times 10^{-3}$ $= 316.55kN > V_{Ed} = 100kN$	OK!
SCI_P358 SS EN1993-1-8	**Bolt bearing resistance in secondary beam web:** Vertical bearing resistance: $k_1 = \min\left(\frac{2.8e_{2,b}}{d_o} - 1.7; \frac{1.4p_2}{d_0} - 1.7; 2.5\right)$ $= \min\left(\frac{2.8 \times 50}{22} - 1.7; 2.5\right)$ $= 2.5$ $\alpha_b = \min\left(\frac{e_{1,b}}{3d_0}; \frac{p_1}{3d_0} - \frac{1}{4}; \frac{f_{ub}}{f_{u,b1}}; 1.0\right)$ $= \min\left(\frac{91.7}{3 \times 22}; \frac{60}{3 \times 22} - \frac{1}{4}; \frac{800}{490}; 1.0\right)$ $= 0.66$ $F_{b,ver,Rd} = \frac{k_1 \alpha_b f_{u,b1} d t_{w,b1}}{\gamma_{M2}}$ $= \frac{2.5 \times 0.66 \times 490 \times 20 \times 6}{1.25} \times 10^{-3}$ $= 77.51kN$	$\boldsymbol{e_{1,b} = 91.7mm}$ $\boldsymbol{e_{2,b} = 50.0mm}$

Check 1R – Bolt group resistance (UB305x165x40)		
Ref	Calculations	Remark
	Horizontal bearing resistance: $k_1 = \min\left(\frac{2.8e_{1,b}}{d_o} - 1.7; \frac{1.4p_1}{d_0} - 1.7; 2.5\right)$ $= \min\left(\frac{2.8 \times 91.7}{22} - 1.7; \frac{1.4 \times 60}{22} - 1.7; 2.5\right)$ $= 2.12$ $\alpha_b = \min\left(\frac{e_{2,b}}{3d_0}; \frac{p_2}{3d_0} - \frac{1}{4}; \frac{f_{ub}}{f_{u,b1}}; 1.0\right)$ $= \min\left(\frac{50}{3 \times 22}; \frac{800}{490}; 1.0\right)$ $= 0.76$ $F_{b,hor,Rd} = \frac{k_1 \alpha_b f_{u,b1} d t_{w,b1}}{\gamma_{M2}}$ $= \frac{2.12 \times 0.76 \times 490 \times 20 \times 6}{1.25} \times 10^{-3}$ $= 75.48kN$ Bolt group bearing resistance: $V_{Rd} = \frac{n}{\sqrt{\left(\frac{1 + \alpha n}{F_{b,ver,Rd}}\right)^2 + \left(\frac{\beta n}{F_{b,hor,Rd}}\right)^2}}$ $= \frac{3}{\sqrt{\left(\frac{1}{77.51}\right)^2 + \left(\frac{0.5 \times 3}{75.48}\right)^2}} \times 10^{-3}$ $= 126.62kN > V_{Ed} = 100kN$	OK!

Check 2R – Fin plate resistance (UB305x165x40)		
Ref	Calculations	Remark
SS EN1993-1-8 SCI_P358	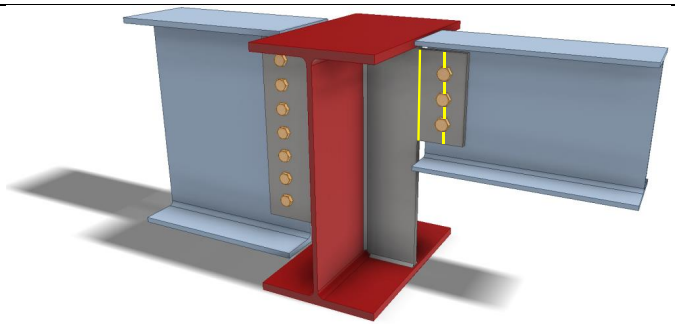 **Fin plate shear resistance (gross section):** $t_p = 15mm < 16mm$ $\therefore f_{y,p} = 275MPa$ Gross section shear resistance: $V_{Rd,g} = \frac{h_p t_p}{1.27} \frac{f_{y,p}}{\sqrt{3}\gamma_{M0}}$ $= \frac{220 \times 15}{1.27} \times \frac{355}{\sqrt{3}} \times 10^{-3}$ $= 532.57kN$ **Fin plate shear resistance (net section):** $A_{v,net} = t_p(h_p - n_1 d_0)$ $= 15 \times (220 - 3 \times 22)$ $= 2310mm^2$ Net area shear resistance: $V_{Rd,n} = \frac{A_{v,net} f_{u,p}}{\sqrt{3}\gamma_{M2}}$ $= 2310 \times \frac{490}{\sqrt{3} \times 1.25} \times 10^{-3}$ $= 522.80kN$	$h_p = 360mm$ $\gamma_{M0} = 1.0$ (SS EN1993-1-1)

Check 2R – Fin plate resistance (UB305x165x40)		
Ref	Calculations	Remark
	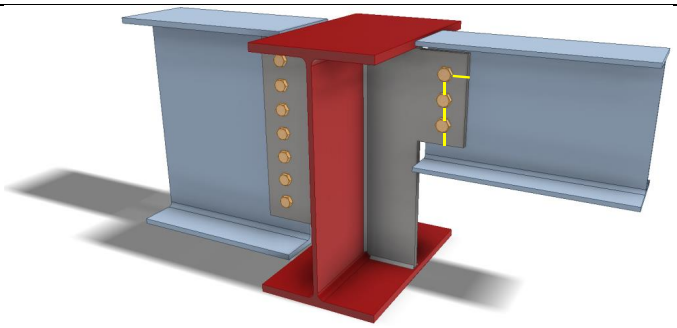 **Fin plate shear resistance (block shear):** For single vertical line of bolts ($n_2 = 1$): Net area subject to tension: $A_{nt} = t_p\left(e_2 - \frac{d_0}{2}\right)$ $= 15 \times (50 - \frac{22}{2})$ $= 585mm^2$ Net area subject to shear: $A_{nv} = t_p(h_p - e_1 - (n_1 - 0.5)d_0)$ $= 15 \times (220 - 50 - (3 - 0.5) \times 22)$ $= 1725mm^2$ $V_{Rd,b} = \left(\frac{0.5 f_{u,p} A_{nt}}{\gamma_{M2}} + \frac{f_{y,p}}{\sqrt{3}}\frac{A_{nv}}{\gamma_{M0}}\right)$ $= \left(\frac{0.5 \times 490 \times 585}{1.25} + \frac{355}{\sqrt{3}}\frac{1725}{1.0}\right) \times 10^{-3}$ $= 468.21kN$ $V_{Rd,min} = \min(V_{Rd,g}; V_{Rd,n}; V_{Rd,b})$ $= \min(532.57kN; 522.80kN; 468.21kN)$ $= 468.21kN > V_{Ed} = 100kN$	OK!

Check 2R – Fin plate resistance (UB305x165x40)		
Ref	Calculations	Remark
SCI_P358 SS EN1993-1-8	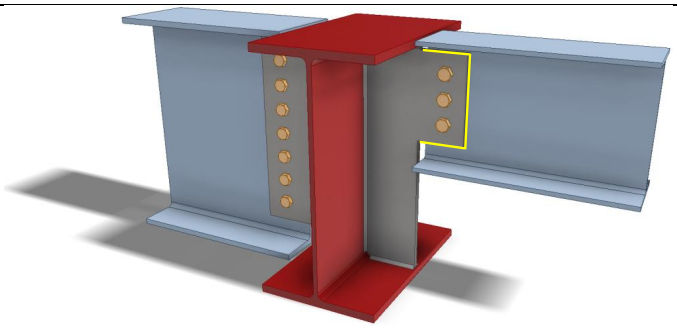 **Fin plate Bending:** $h_p = 220mm > 2.73z = 163.8mm$ $\therefore V_{Rd} = \infty$ $W_{el,p} = \frac{t_p h_p^2}{6}$ $= \frac{15 \times 220^2}{6}$ $= 121000mm^3$ **Lateral torsional buckling:** $z_p = 60mm < \frac{t_p}{0.15} = 100mm$ ∴The fin plate is classified as **Short fin plate** $V_{Rd} = \frac{W_{el,p}}{z}\frac{f_{y,p}}{\gamma_{M0}}$ $= \frac{121000 \times 355}{60 \times 1.0}$ $= 715.92kN > V_{Ed} = 100kN$	OK! OK!

Check 3R – Secondary beam web resistance (UB305x165x40)		
Ref	Calculations	Remark
SCI_P358 SS EN1993-1-8	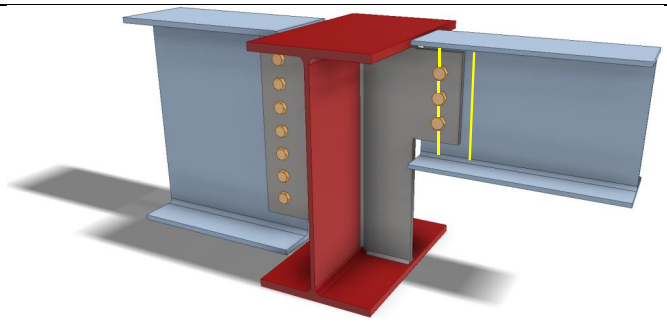 **Beam shear resistance (gross section):** For unnotched beams (UB406x178x60): $A_V = A_g - 2b_{b1}t_{f,b1} + (t_{w,b1} + 2r_{b1})t_{f,b1}$ $= 5130 - 2 \times 165 \times 10.2 + (6.0 + 2 \times 8.9) \times 10.2$ $= 2006.76mm^2$ $V_{Rd,g} = V_{pl,Rd} = \frac{A_V f_{y,b1}}{\sqrt{3}\gamma_{M0}}$ $= 2006.76 \times \frac{355}{\sqrt{3} \times 1.0} \times 10^{-3}$ $= 411.30kN$ **Beam web shear resistance (net section):** $A_{V,net} = A_V - n_1 d_0 t_{w,b1}$ $= 2006.76 - 3 \times 22 \times 6$ $= 1610.76mm^2$ $V_{Rd,n} = \frac{A_{V,net} f_{u,b1}}{\sqrt{3}\gamma_{M2}}$ $= 1610.76 \times \frac{490}{\sqrt{3} \times 1.25} \times 10^{-3}$ $= 364.55kN$	

Check 3R – Secondary beam web resistance (UB305x165x40)		
Ref	Calculations	Remark
	$V_{Rd,min} = \min(V_{Rd,g}; V_{Rd,n})$ $= \min(411.30kN; 364.55kN)$ $= 364.55kN > V_{Ed} = 100kN$ **Shear and bending interaction of secondary beam web:** For Short fin plate, shear and bending moment interaction check is NOT necessary	

Check 4R – Welds (C shape fillet welds)		
Ref	Calculations	Remark
SS EN1993-1-8	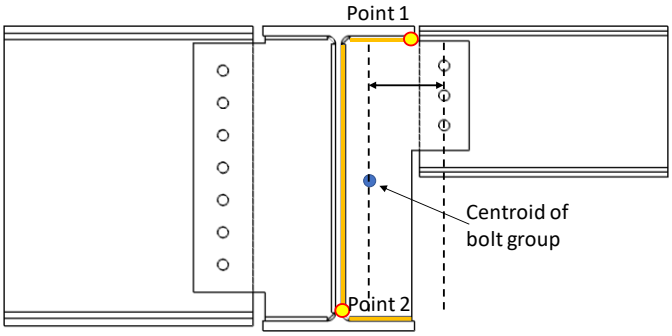 Location of centre of gravity of welds group: $\bar{x} = \frac{b^2}{(2b+d)}$ $= \frac{128.5^2}{(2 \times 128.5 + 464)}$ $= 15.63mm$ $\bar{y} = \frac{d}{2}$ $= \frac{464}{2}$ $= 232mm$ Unit throat area: $A_u = 2b + d$ $= 2 \times 128.5 + 464$ $= 721mm$ Moment arm between applied force and weld center: $r = 190.87mm$ Induced moment on welds: $M = V_{Ed} \times r$ $= 100 \times 190.87$ $= 19087kNmm$	Length of the fillet welds: Horizontal length: $b = 128.5mm$ Depth: $d = 464mm$

Check 4R – Welds (C shape fillet welds)		
Ref	Calculations	Remark
	Polar moment of inertia: $J = \frac{8b^3 + 6bd^2 + d^3}{12} - \frac{b^4}{2b + d}$ $= \frac{8 \times 128.5^3 + 6 \times 128.5 \times 464 + 464^3}{12} - \frac{128.5^4}{2 \times 128.5 + 464}$ $= 23193935mm^3$ **End-point 1:** Horizontal distance from centroid: $r_{zh} = b - \bar{x}$ $= 128.5 - 15.63$ $= 112.87mm$ Vertical distance from centroid: $r_{zv} = \bar{y} + cope\ hole\ size$ $= 232 + 18mm$ $= 250mm$ Vertical stress: $\tau_v = \frac{V_{Ed}}{A_u} + \frac{Mr_{zh}}{J}$ $= \frac{100}{721} + \frac{19087 \times 112.87}{23193935}$ $= 0.2316kN/mm$ Horizontal stress: $\tau_h = \frac{Mr_{zv}}{J}$ $= \frac{19087 \times 250}{23193935}$ $= 0.2057kN/mm$ Resultant stress: $\tau_r = \sqrt{\tau_v^2 + \tau_h^2}$ $= \sqrt{0.2316^2 + 0.2057^2}$ $= 0.31kN/mm$	

Check 4R – Welds (C shape fillet welds)		
Ref	Calculations	Remark
	End-point 2: Horizontal distance from centroid: $r_{zh} = \bar{x} + cope\ hole\ size$ $= 15.63 + 18mm = 33.63mm$ Vertical distance from centroid: $r_{zv} = d - \bar{y}$ $= 464 - 232$ $= 232mm$ Vertical stress: $\tau_v = \frac{V_{Ed}}{A_u} + \frac{Mr_{zh}}{J}$ $= \frac{100}{721} + \frac{19087 \times 33.63}{23193935}$ $= 0.1664kN/mm$ Horizontal stress: $\tau_h = \frac{Mr_{zv}}{J}$ $= \frac{19087 \times 232}{23193935}$ $= 0.1909kN/mm$ Resultant stress: $\tau_r = \sqrt{\tau_v^2 + \tau_h^2}$ $= \sqrt{0.1664^2 + 0.1909^2}$ $= 0.25kN/mm$ Choose fillet weld with 5mm leg length, 3.5mm throat thickness and grade S355 which match the beam steel grade: Longitudinal resistance: $F_{w,L,Rd} = 0.84kN/mm$ Transverse resistance: $F_{w,T,Rd} = 1.03kN/mm$ **Simplified method:** $F_{w,L,Rd} = 0.84kN/mm > \tau_{Ed}/2 = 0.15kN/mm$	OK!

Check 4R – Welds (C shape fillet welds)		
Ref	Calculations	Remark
	Directional method: $SF = \left(\frac{\tau_{h,Ed}}{2F_{w,L,Rd}}\right)^2 + \left(\frac{\tau_{v,Ed}}{2F_{w,T,Rd}}\right)^2$ $= \left(\frac{0.23}{0.84 \times 2}\right)^2 + \left(\frac{0.21}{1.03 \times 2}\right)^2$ $= 0.03 < 1.00$	OK!

Check 5 – Local shear and punching resistance of primary beam (two 2nd beam)		
Ref	Calculations	Remark
SCI_P358 SS EN1993-1-8	**Local shear** resistance of the primary beam (UB610x305x149) web: $h_{p,min} = \min(h_{p,1}; h_{p,2})$ $= \min(500; 220)$ $= 220mm$ $A_v = h_{p,min} t_2$ $= 220 \times 11.8$ $= 2596mm^2$ $F_{Rd} = \frac{A_v f_{y,2}}{\sqrt{3}\gamma_{M0}}$ $= \frac{2596 \times 355}{\sqrt{3}} \times 10^{-3}$ $= 532.07kN$ $V_{Ed,tot} = \left(\frac{V_{Ed,1}}{h_{p,1}} + \frac{V_{Ed,2}}{h_{p,2}}\right) h_{p,min}$ $= \left(\frac{400}{500} + \frac{100}{220}\right) \times 220$ $= 276kN$ $F_{Rd} = 532.07kN < \frac{V_{Ed,tot}}{2} = 138kN$	OK!

2.3.5 Example 3 – One-sided Beam-to-Beam skewed connection with extended fin plates

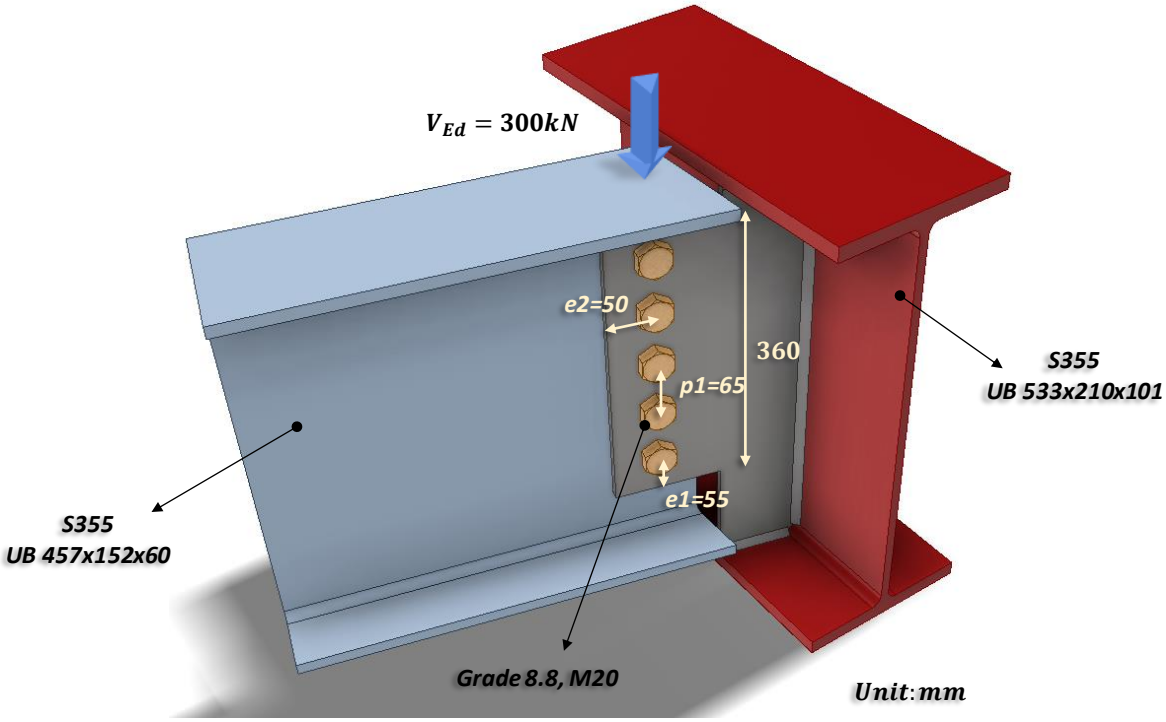

Check 1 – Bolt group resistance		
Ref	Calculations	Remark
	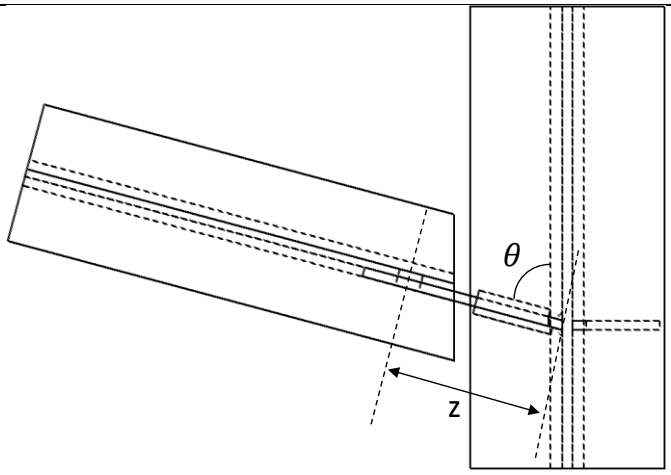 **Bolt shear resistance:** Using Gr8.8, M20 bolts with: $A_s = 245mm^2$, $f_{ub} = 800MPa$, $\alpha_v = 0.6$	
SS EN1993-1-8	Shear resistance of a single bolt: $F_{v,Rd} = \frac{\alpha_v f_{ub} A_s}{\gamma_{M2}}$ $= \frac{0.6 \times 800 \times 245}{1.25} \times 10^{-3}$ $= 94.08kN$	$\gamma_{M2} = 1.25$ (refer to NA to SS)
SCI_P358 SN017	For single vertical line of bolts ($n_2 = 1$): $\alpha = 0$ $\beta = \frac{6z}{n_1(n_1+1)p_1}$ $= \frac{6 \times 60.35mm}{5 \times (5+1) \times 65mm}$ $= 0.19$ $n_1 = 5, n = 5 \times 1 = 5$ $V_{Rd} = \frac{nF_{V,Rd}}{\sqrt{(1+\alpha n)^2 + (\beta n)^2}}$ $= \frac{5 \times 94.08}{\sqrt{(1+0)^2 + (0.19 \times 5)^2}} \times 10^{-3}$ $= 344.72kN > V_{Ed} = 300kN$	OK!

Check 1 – Bolt group resistance		
Ref	Calculations	Remark
SCI_P358 SS EN1993-1-8	**Bolt bearing resistance in the fin plate:** For bearing resistance in vertical direction of one bolt: $k_1 = \min\left(\frac{2.8e_2}{d_o} - 1.7; \frac{1.4p_2}{d_0} - 1.7; 2.5\right)$ $= \min\left(\frac{2.8 \times 50}{22} - 1.7; 2.5\right)$ $= 2.5$ $\alpha_b = \min\left(\frac{e_1}{3d_0}; \frac{p_1}{3d_0} - \frac{1}{4}; \frac{f_{ub}}{f_{u,p}}; 1.0\right)$ $= \min\left(\frac{50}{3 \times 22}; \frac{65}{3 \times 22} - \frac{1}{4}; \frac{800}{490}; 1.0\right)$ $= 0.73$ $F_{b,ver,Rd} = \frac{k_1 \alpha_b f_{u,p} d t_p}{\gamma_{M2}}$ $= \frac{2.5 \times 0.73 \times 490 \times 20 \times 10}{1.25} \times 10^{-3}$ $= 144.03kN$ For bearing resistance in horizontal direction of one bolt: $k_1 = \min\left(\frac{2.8e_1}{d_o} - 1.7; \frac{1.4p_1}{d_0} - 1.7; 2.5\right)$ $= \min\left(\frac{2.8 \times 50}{22} - 1.7; \frac{1.4 \times 65}{22} - 1.7; 2.5\right)$ $= 2.44$ $\alpha_b = \min\left(\frac{e_2}{3d_0}; \frac{p_2}{3d_0} - \frac{1}{4}; \frac{f_{ub}}{f_{u,p}}; 1.0\right)$ $= \min\left(\frac{50}{3 \times 22}; \frac{800}{490}; 1.0\right)$ $= 0.76$	$\boldsymbol{e_1 = 50.0mm}$ $(1.2d_0 < e_1 < 4t + 40mm)$ $\boldsymbol{p_1 = 65.0mm}$ $(2.2d_0 < p_1 < 14t\ or\ 200mm)$ $\boldsymbol{e_2 = 50.0mm}$ $(1.2d_0 < e_2 < 4t + 40mm)$ $\boldsymbol{p_2 = nil}$ $(2.4d_0 < p_2 < 14t\ or\ 200mm)$

Check 1 – Bolt group resistance		
Ref	Calculations	Remark
	$F_{b,hor,Rd} = \frac{k_1 \alpha_b f_{u,p} d t_p}{\gamma_{M2}}$ $= \frac{2.44 \times 0.76 \times 490 \times 20 \times 10}{1.25} \times 10^{-3}$ $= 144.71\text{kN}$ Bolt group bearing resistance: $V_{Rd} = \frac{n}{\sqrt{\left(\frac{1+\alpha n}{F_{b,ver,Rd}}\right)^2 + \left(\frac{\beta n}{F_{b,hor,Rd}}\right)^2}}$ $= \frac{5}{\sqrt{\left(\frac{1}{144.03}\right)^2 + \left(\frac{0.19 \times 5}{144.71}\right)^2}} \times 10^{-3}$ $= 528.89kN > V_{Ed} = 300kN$	OK!
SCI_P358 SS EN1993-1-8	**Bolt bearing resistance in secondary beam web:** Vertical bearing resistance: $k_1 = \min\left(\frac{2.8e_{2,b}}{d_o} - 1.7; \frac{1.4p_2}{d_0} - 1.7; 2.5\right)$ $= \min\left(\frac{2.8 \times 50}{22} - 1.7; 2.5\right)$ $= 2.5$ $\alpha_b = \min\left(\frac{e_{1,b}}{3d_0}; \frac{p_1}{3d_0} - \frac{1}{4}; \frac{f_{ub}}{f_{u,b1}}; 1.0\right)$ $= \min\left(\frac{97.3}{3 \times 22}; \frac{65}{3 \times 22} - \frac{1}{4}; \frac{800}{490}; 1.0\right)$ $= 0.73$ $F_{b,ver,Rd} = \frac{k_1 \alpha_b f_{u,b1} d t_{w,b1}}{\gamma_{M2}}$ $= \frac{2.5 \times 0.73 \times 490 \times 20 \times 8.1}{1.25} \times 10^{-3}$ $= 116.66kN$	$\boldsymbol{e_{1,b} = 97.3mm}$ $\boldsymbol{e_{2,b} = 50.0mm}$

Check 1 – Bolt group resistance		
Ref	Calculations	Remark
	Horizontal bearing resistance: $k_1 = \min\left(\frac{2.8e_{1,b}}{d_o} - 1.7; \frac{1.4p_1}{d_0} - 1.7; 2.5\right)$ $= \min\left(\frac{2.8 \times 97.3}{22} - 1.7; \frac{1.4 \times 65}{22} - 1.7; 2.5\right)$ $= 2.44$ $\alpha_b = \min\left(\frac{e_{2,b}}{3d_0}; \frac{p_2}{3d_0} - \frac{1}{4}; \frac{f_{ub}}{f_{u,b1}}; 1.0\right)$ $= \min\left(\frac{50}{3 \times 22}; \frac{800}{490}; 1.0\right)$ $= 0.76$ $F_{b,hor,Rd} = \frac{k_1 \alpha_b f_{u,b1} d t_{w,b1}}{\gamma_{M2}}$ $= \frac{2.44 \times 0.76 \times 490 \times 20 \times 8.1}{1.25} \times 10^{-3}$ $= 117.21kN$ Bolt group bearing resistance: $V_{Rd} = \frac{n}{\sqrt{\left(\frac{1 + \alpha n}{F_{b,ver,Rd}}\right)^2 + \left(\frac{\beta n}{F_{b,hor,Rd}}\right)^2}}$ $= \frac{5}{\sqrt{\left(\frac{1}{116.66}\right)^2 + \left(\frac{0.19 \times 5}{117.21}\right)^2}} \times 10^{-3}$ $= 428.40kN > V_{Ed} = 300kN$	OK!

Check 2 – Fin plate resistance		
Ref	Calculations	Remark
SS EN1993-1-8 SCI_P358	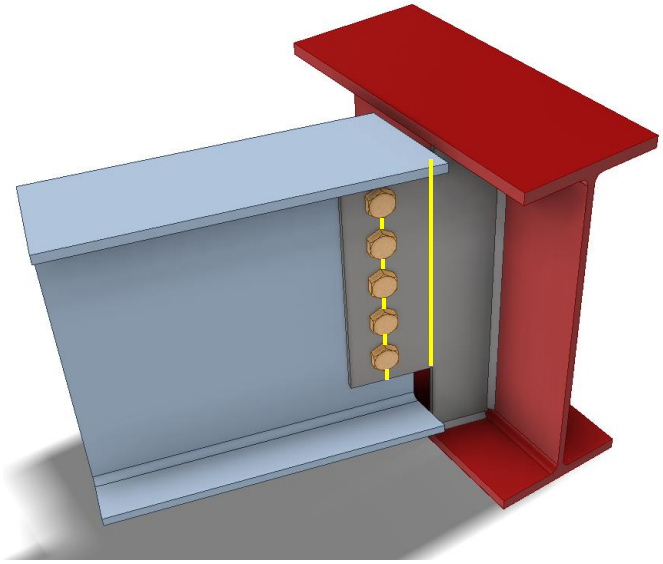 **Fin plate shear resistance (gross section):** $t_p = 10mm < 16mm$ $\therefore f_{y,p} = 355MPa$ Gross section shear resistance: $V_{Rd,g} = \frac{h_p t_p}{1.27} \frac{f_{y,p}}{\sqrt{3}\gamma_{M0}}$ $= \frac{360 \times 10}{1.27} \times \frac{355}{\sqrt{3}} \times 10^{-3}$ $= 580.99kN$ **Fin plate shear resistance (net section):** $A_{v,net} = t_p(h_p - n_1 d_0)$ $= 10 \times (360 - 5 \times 22)$ $= 2500mm^2$ Net area shear resistance: $V_{Rd,n} = \frac{A_{v,net} f_{u,p}}{\sqrt{3}\gamma_{M2}}$ $= 2500 \times \frac{490}{\sqrt{3} \times 1.25} \times 10^{-3}$ $= 565.80kN$	$h_p = 360mm$ $\gamma_{M0} = 1.0$ (SS EN1993-1-1)

Check 2 – Fin plate resistance		
Ref	Calculations	Remark
	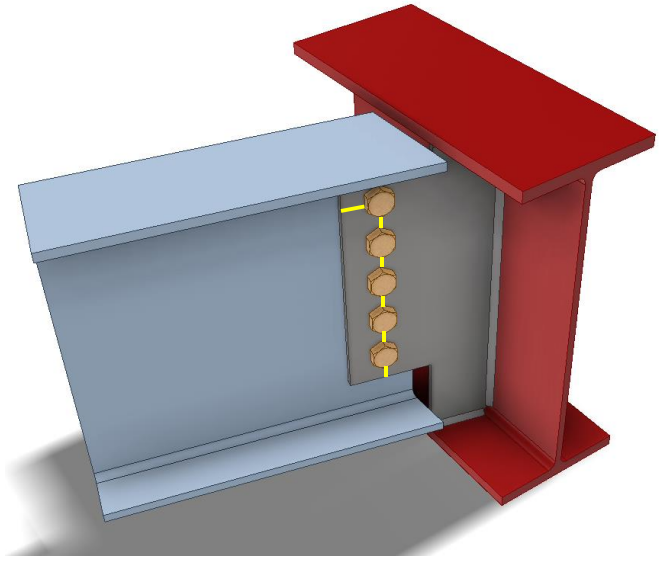	
	Fin plate shear resistance (block shear): For single vertical line of bolts ($n_2 = 1$): Net area subject to tension: $A_{nt} = t_p\left(e_2 - \frac{d_0}{2}\right)$ $= 10 \times (50 - \frac{22}{2})$ $= 390mm^2$ Net area subject to shear: $A_{nv} = t_p(h_p - e_1 - (n_1 - 0.5)d_0)$ $= 10 \times (360 - 50 - (5 - 0.5) \times 22)$ $= 2110mm^2$ $V_{Rd,b} = \left(\frac{0.5 f_{u,p} A_{nt}}{\gamma_{M2}} + \frac{f_{y,p}}{\sqrt{3}}\frac{A_{nv}}{\gamma_{M0}}\right)$ $= \left(\frac{0.5 \times 490 \times 390}{1.25} + \frac{355}{\sqrt{3}}\frac{2110}{1.0}\right) \times 10^{-3}$ $= 508.90kN$ $V_{Rd,min} = \min(V_{Rd,g}; V_{Rd,n}; V_{Rd,b})$ $= \min(580.99kN; 565.80kN; 508.90kN)$ $= 508.90kN > V_{Ed} = 300kN$	OK!

Check 2 – Fin plate resistance		
Ref	Calculations	Remark
SCI_P358 SS EN1993-1-8	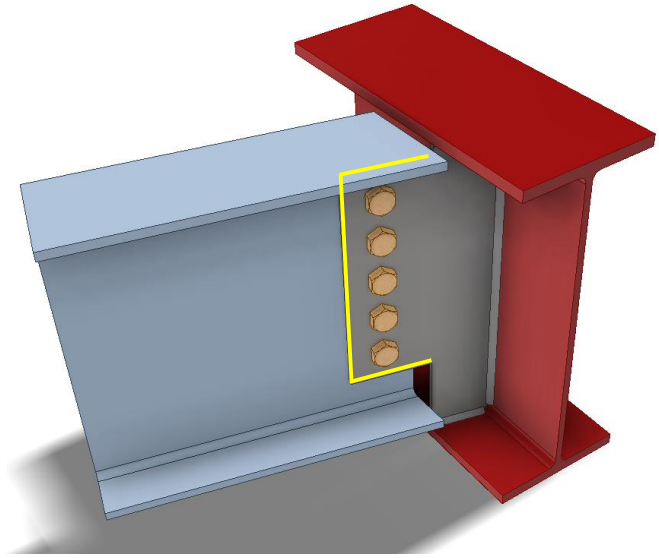 **Fin plate bending:** $h_p = 360mm > 2.73z = 164.76mm$ $\therefore V_{Rd} = \infty$ **Lateral torsional buckling:** $z_p = 60mm < \frac{t_p}{0.15} = 100mm$ ∴The fin plate is classified as **Short fin plate** $W_{el,p} = \frac{t_p h_p^2}{6}$ $= \frac{15 \times 220^2}{6}$ $= 216000mm^3$ $V_{Rd} = \frac{W_{el,p}}{z}\frac{f_{y,p}}{\gamma_{M0}}$ $= \frac{216000 \times 355}{60.35 \times 1.0}$ $= 1270.59kN > V_{Ed} = 300kN$	OK! OK!

Check 3 – Secondary beam web resistance		
Ref	Calculations	Remark
SCI_P358 SS EN1993-1-8	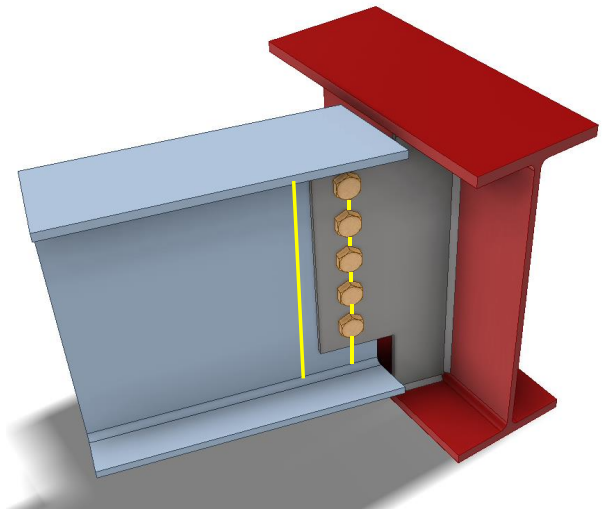 **Beam web shear resistance (gross section):** For unnotched beams (UB457x152x60): $A_V = A_g - 2b_{b1}t_{f,b1} + (t_{w,b1} + 2r_{b1})t_{f,b1}$ $= 7620 - 2 \times 152.9 \times 13.3 + (8.1 + 2 \times 10.2) \times 13.3$ $= 3931.91mm^2$ $V_{Rd,g} = V_{pl,Rd} = \frac{A_V f_{y,b1}}{\sqrt{3}\gamma_{M0}}$ $= 3931.91 \times \frac{355}{\sqrt{3} \times 1.0} \times 10^{-3}$ $= 805.88kN$ **Beam web shear resistance (net section):** $A_{V,net} = A_V - n_1 d_0 t_{w,b1}$ $= 3931.91 - 5 \times 22 \times 8.1$ $= 3040.9mm^2 1$ $V_{Rd,n} = \frac{A_{V,net} f_{u,b1}}{\sqrt{3}\gamma_{M2}}$ $= 3040.91 \times \frac{490}{\sqrt{3} \times 1.25} \times 10^{-3}$ $= 688.22kN$	

Check 3 – Secondary beam web resistance		
Ref	Calculations	Remark
	$V_{Rd,min} = \min(V_{Rd,g}; V_{Rd,n})$ $= \min(805.88kN; 688.22kN)$ $= 688.22kN > V_{Ed} = 300kN$ **Shear and bending interaction of secondary beam web:** For Short fin plate, shear and bending moment interaction check is NOT necessary	OK!

Check 4 – Welds (C shape fillet welds)		
Ref	Calculations	Remark
	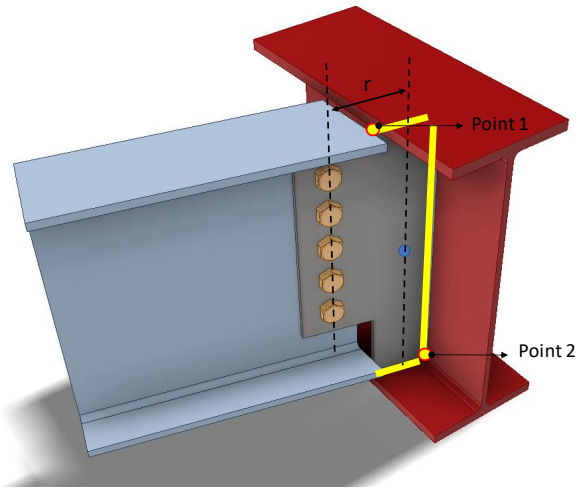	
SS EN1993-1-8	Location of centre of gravity of welds group: $\bar{x} = \frac{b^2}{(2b + d)}$ $= \frac{88.12^2}{(2 \times 88.12 + 471.9)}$ $= 7.52mm$ $\bar{y} = \frac{d}{2}$ $= \frac{471.9}{2}$ $= 235.95mm$ Unit throat area: $A_u = 2b + d$ $= 2 \times 88.12 + 471.9$ $= 648.14mm$ Moment arm between applied force and weld center: $r = 161.48mm$ Induced moment on welds: $M = V_{Ed} \times r$ $= 300 \times 161.48$ $= 48444kNmm$	Length of the c-shape fillet welds: Horizontal length: $b = 88.12mm$ Depth: $d = 471.9mm$

Check 4 – Welds (C shape fillet welds)		
Ref	Calculations	Remark
	Polar moment of inertia: $J = \frac{8b^3 + 6bd^2 + d^3}{12} - \frac{b^4}{2b + d}$ $= \frac{8 \times 88.12^3 + 6 \times 88.12 \times 471.9 + 471.9^3}{12} - \frac{88.12^4}{2 \times 88.12 + 471.9}$ $= 18932118mm^3$ **End-point 1:** Horizontal distance from centroid: $r_{zh} = b - \bar{x}$ $= 88.12 - 7.52$ $= 80.60mm$ Vertical distance from centroid: $r_{zv} = \bar{y} + cope\ hole\ size$ $= 235.95 + 15mm$ $= 250.95mm$ Vertical stress: $\tau_v = \frac{V_{Ed}}{A_u} + \frac{Mr_{zh}}{J}$ $= \frac{300}{648.14} + \frac{48444 \times 80.60}{18932118}$ $= 0.6691kN/mm$ Horizontal stress: $\tau_h = \frac{Mr_{zv}}{J}$ $= \frac{48444 \times 250.95}{18932118}$ $= 0.6421kN/mm$ Resultant stress: $\tau_r = \sqrt{\tau_v^2 + \tau_h^2}$ $= \sqrt{0.6691^2 + 0.6421^2}$ $= 0.93kN/mm$	

Check 4 – Welds (C shape fillet welds)		
Ref	Calculations	Remark
	End-point 2: Horizontal distance from centroid: $r_{zh} = \bar{x} + cope\ hole\ size$ $= 7.52 + 15mm$ $= 22.52mm$ Vertical distance from centroid: $r_{zv} = d - \bar{y}$ $= 471.9 - 235.95$ $= 235.95mm$ Vertical stress: $\tau_v = \frac{V_{Ed}}{A_u} + \frac{Mr_{zh}}{J}$ $= \frac{300}{648.14} + \frac{48444 \times 22.52}{18932118}$ $= 0.5205kN/mm$ Horizontal stress: $\tau_h = \frac{Mr_{zv}}{J}$ $= \frac{48444 \times 235.95}{18932118}$ $= 0.6038kN/mm$ Resultant stress: $\tau_r = \sqrt{\tau_v^2 + \tau_h^2}$ $= \sqrt{0.5205^2 + 0.6038^2}$ $= 0.80kN/mm$ Choose fillet weld with 5mm leg length, 3.5mm throat thickness and grade S355 for the side with smaller angle which match beam steel grade: Longitudinal resistance: $F_{w,L,Rd} = 0.84kN/mm$ Transverse resistance: $F_{w,T,Rd} = 1.03kN/mm$	As the angle is 75° ($60° < \theta = 75° < 90°$), the assumption that the throat thickness is 70% of leg length is valid (Refer to table in Note)

Check 4 – Welds (C shape fillet welds)		
Ref	Calculations	Remark
	Simplified method: $F_{w,L,Rd} = 0.84kN/mm > \tau_{Ed}/2 = 0.47kN/mm$ **Directional method:** $SF = \left(\frac{\tau_{h,Ed}/2}{F_{w,L,Rd}}\right)^2 + \left(\frac{\tau_{v,Ed}/2}{F_{w,T,Rd}}\right)^2$ $= \left(\frac{0.33}{0.84}\right)^2 + \left(\frac{0.32}{1.03}\right)^2$ $= 0.26 < 1.00$ **For weld on the other side of the fin plate:** As the angle between fusion faces is: $\theta = 90° + 15° = 105°$ The leg length required is: $s = \frac{a}{0.6} = \frac{3.5}{0.6} = 5.9mm$ Hence, for the fillet weld on the greater angle side of the fin plate, **5.9mm** leg length should be used.	OK! OK!

Note:

According to SS EN1993-1-8 Clause 4.3.2.1 (1)- (3), fillet weld may be used where fusion faces form an angle of between 60° and 120°. For angle lesser than 60°, the weld should be designed as partial penetration butt weld and for angle greater than 120°, the weld resistance should be determined by testing. The table below listed the factors used to find the throat thickness for equal leg length fillet weld with different angles between fusion faces.

Angle between fusion faces θ (degrees)	Factor to be applied to the leg length s
60 to 90	0.70
91 to 100	0.65
101 to 106	0.60
107 to 113	0.55
114 to 120	0.50

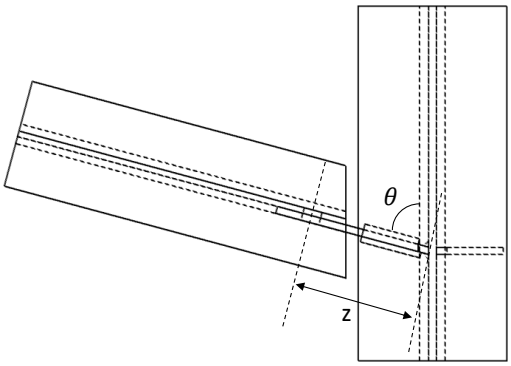

Check 5 – Shear and bearing resistance of primary beam (One 2nd beam)		
Ref	Calculations	Remark
SCI_P358 SS EN1993-1-8	**Local shear** resistance of the primary beam (UB533x210x101) web: $A_v = dt_2$ $= 471.9 \times 10.8$ $= 5096.52mm^2$ $F_{Rd} = \frac{A_v f_{y,2}}{\sqrt{3}\gamma_{M0}}$ $= \frac{5096.52 \times 355}{\sqrt{3} \times 1.0} \times 10^{-3}$ $= 1044.58kN > \frac{V_{Ed}}{2} = 150kN$ **Punching shear resistance:** $t_p = 10mm$ $\frac{t_2 f_{u,2}}{f_{y,p}\gamma_{M2}} = \frac{10.8 \times 490}{355 \times 1.25} = 11.93mm > t_p = 10mm$	$t_2 = 10.8mm$ $f_{y,2} = 355MPa$ $d = 471.9mm$ OK! OK!

2.3.6 Example 4 – Two-sided Beam-to-Column fin plate connection bending about the major axis of the column

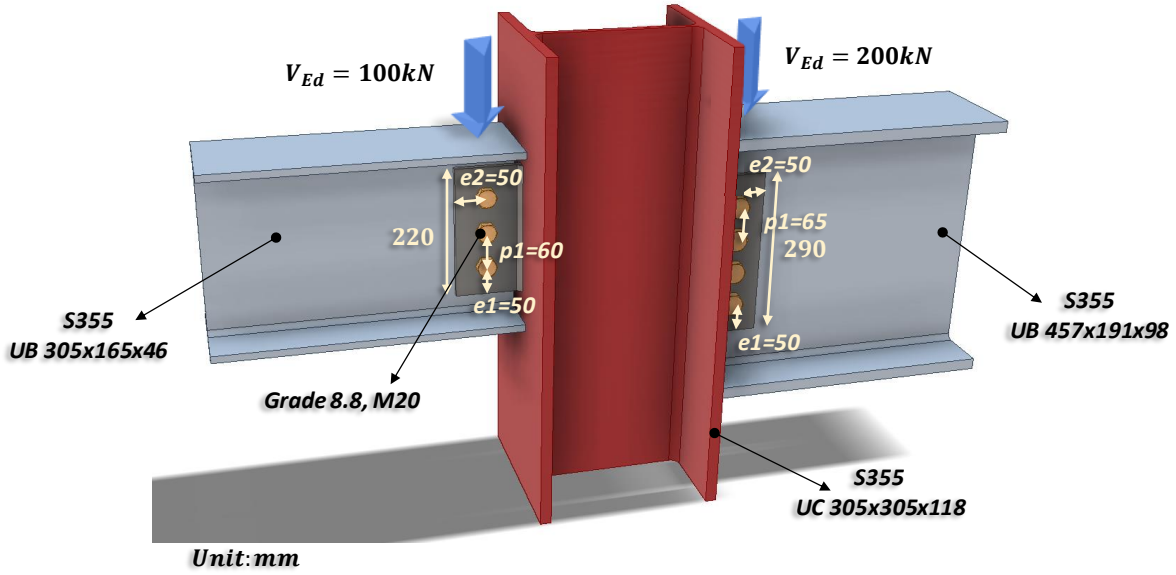

Check 1L – Bolt group resistance (UB305x165x46)		
Ref	Calculation	Remark
	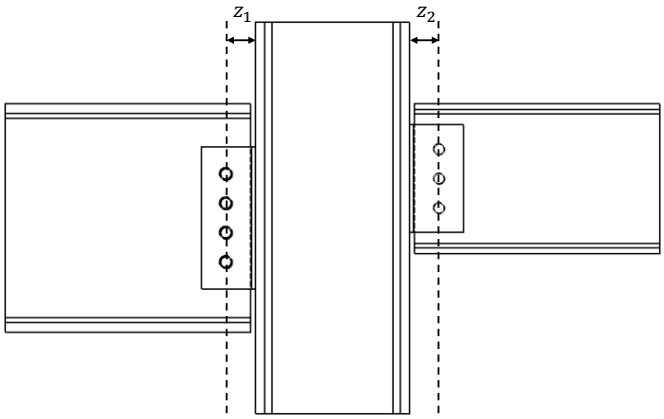 **Bolt resistance:** Using Gr8.8, M20 bolts with: $A_s = 245mm^2; f_{ub} = 800MPa;$ $\alpha_v = 0.6$	
SS EN1993-1-8	Shear resistance of a single bolt: $F_{v,Rd} = \frac{\alpha_v f_{ub} A_s}{\gamma_{M2}}$ $= \frac{0.6 \times 800 \times 245}{1.25} \times 10^{-3}$ $= 94.08kN$ For single vertical line of bolts ($n_2 = 1$): $\alpha = 0$ $\beta = \frac{6z}{n_1(n_1+1)p_1}$ $= \frac{6 \times 60mm}{3 \times (3+1) \times 60mm}$ $= 0.50$ $n_1 = 3, n = 3 \times 1 = 3$ $V_{Rd} = \frac{nF_{V,Rd}}{\sqrt{(1+\alpha n)^2 + (\beta n)^2}}$ $= \frac{3 \times 94.08}{\sqrt{(1+0)^2 + (0.50 \times 3)^2}} \times 10^{-3}$ $= 156.56kN > V_{Ed} = 100kN$	$\gamma_{M2} = 1.25$ (refer to NA to SS) $z = 60mm$ OK!

Check 1L – Bolt group resistance (UB305x165x46)		
Ref	Calculation	Remark
SCI_P358 SS EN1993-1-8 SN017	**Bolt bearing resistance in the fin plate:** For bearing resistance in vertical direction of one bolt: $k_1 = \min\left(\frac{2.8e_2}{d_o} - 1.7; \frac{1.4p_2}{d_0} - 1.7; 2.5\right)$ $= \min\left(\frac{2.8 \times 50}{22} - 1.7; 2.5\right)$ $= 2.5$ $\alpha_b = \min\left(\frac{e_1}{3d_0}; \frac{p_1}{3d_0} - \frac{1}{4}; \frac{f_{ub}}{f_{u,p}}; 1.0\right)$ $= \min\left(\frac{50}{3 \times 22}; \frac{60}{3 \times 22} - \frac{1}{4}; \frac{800}{490}; 1.0\right)$ $= 0.66$ $F_{b,ver,Rd} = \frac{k_1 \alpha_b f_{u,p} d t_p}{\gamma_{M2}}$ $= \frac{2.5 \times 0.66 \times 490 \times 20 \times 10}{1.25} \times 10^{-3}$ $= 129.18kN$ For bearing resistance in horizontal direction of one bolt: $k_1 = \min\left(\frac{2.8e_1}{d_o} - 1.7; \frac{1.4p_1}{d_0} - 1.7; 2.5\right)$ $= \min\left(\frac{2.8 \times 50}{22} - 1.7; \frac{1.4 \times 60}{22} - 1.7; 2.5\right)$ $= 2.12$ $\alpha_b = \min\left(\frac{e_2}{3d_0}; \frac{p_2}{3d_0} - \frac{1}{4}; \frac{f_{ub}}{f_{u,p}}; 1.0\right)$ $= \min\left(\frac{50}{3 \times 22}; \frac{800}{490}; 1.0\right)$ $= 0.76$	$\boldsymbol{e_1 = 50.0mm}$ $(1.2d_0 < e_1 < 4t + 40mm)$ $\boldsymbol{p_1 = 60.0mm}$ $(2.2d_0 < p_1 < 14t\ or\ 200mm)$ $\boldsymbol{e_2 = 50.0mm}$ $(1.2d_0 < e_2 < 4t + 40mm)$ $\boldsymbol{p_2 = nil}$ $(2.4d_0 < p_2 < 14t\ or\ 200mm)$

Check 1L – Bolt group resistance (UB305x165x46)		
Ref	Calculation	Remark
	$F_{b,hor,Rd} = \frac{k_1 \alpha_b f_{u,p} d t_p}{\gamma_{M2}}$ $= \frac{2.12 \times 0.76 \times 490 \times 20 \times 10}{1.25} \times 10^{-3}$ $= 125.81\text{kN}$ Bolt group bearing resistance: $V_{Rd} = \frac{n}{\sqrt{\left(\frac{1+\alpha n}{F_{b,ver,Rd}}\right)^2 + \left(\frac{\beta n}{F_{b,hor,Rd}}\right)^2}}$ $= \frac{3}{\sqrt{\left(\frac{1}{129.18}\right)^2 + \left(\frac{0.50 \times 3}{125.81}\right)^2}} \times 10^{-3}$ $= 211.04kN > V_{Ed} = 100kN$	OK!
SCI_P358 SS EN1993-1-8	**Bolt bearing resistance in secondary beam web:** Vertical bearing resistance: $k_1 = \min\left(\frac{2.8e_{2,b}}{d_o} - 1.7; \frac{1.4p_2}{d_0} - 1.7; 2.5\right)$ $= \min\left(\frac{2.8 \times 50}{22} - 1.7; 2.5\right)$ $= 2.5$ $\alpha_b = \min\left(\frac{e_{1,b}}{3d_0}; \frac{p_1}{3d_0} - \frac{1}{4}; \frac{f_{ub}}{f_{u,b1}}; 1.0\right)$ $= \min\left(\frac{93.3}{3 \times 22}; \frac{60}{3 \times 22} - \frac{1}{4}; \frac{800}{490}; 1.0\right)$ $= 0.66$ $F_{b,ver,Rd} = \frac{k_1 \alpha_b f_{u,b1} d t_{w,b1}}{\gamma_{M2}}$ $= \frac{2.5 \times 0.66 \times 490 \times 20 \times 6.7}{1.25} \times 10^{-3}$ $= 86.55kN$	$\boldsymbol{e_{1,b} = 93.3mm}$ $\boldsymbol{e_{2,b} = 50.0mm}$

Check 1L – Bolt group resistance (UB305x165x46)		
Ref	Calculation	Remark
	Horizontal bearing resistance: $k_1 = \min\left(\frac{2.8e_{1,b}}{d_o} - 1.7; \frac{1.4p_1}{d_0} - 1.7; 2.5\right)$ $= \min\left(\frac{2.8 \times 93.3}{22} - 1.7; \frac{1.4 \times 60}{22} - 1.7; 2.5\right)$ $= 2.12$ $\alpha_b = \min\left(\frac{e_{2,b}}{3d_0}; \frac{p_2}{3d_0} - \frac{1}{4}; \frac{f_{ub}}{f_{u,b1}}; 1.0\right)$ $= \min\left(\frac{50}{3 \times 22}; \frac{800}{490}; 1.0\right)$ $= 0.76$ $F_{b,hor,Rd} = \frac{k_1 \alpha_b f_{u,b1} d t_{w,b1}}{\gamma_{M2}}$ $= \frac{2.12 \times 0.76 \times 490 \times 20 \times 6.7}{1.25} \times 10^{-3}$ $= 84.29kN$ Bolt group bearing resistance: $V_{Rd} = \frac{n}{\sqrt{\left(\frac{1 + \alpha n}{F_{b,ver,Rd}}\right)^2 + \left(\frac{\beta n}{F_{b,hor,Rd}}\right)^2}}$ $= \frac{3}{\sqrt{\left(\frac{1}{86.55}\right)^2 + \left(\frac{0.52 \times 3}{84.29}\right)^2}} \times 10^{-3}$ $= 141.39kN > V_{Ed} = 100kN$	OK!

Check 2L – Fin plate resistance (UB 305x165x46)		
Ref	Calculations	Remark
SS EN1993-1-8 SCI_P358	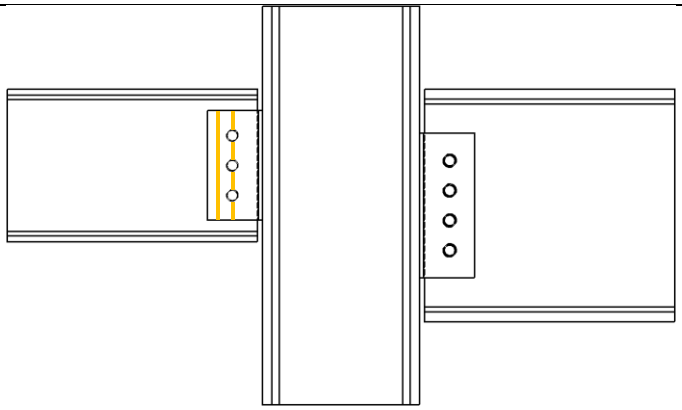 **Fin plate shear resistance (gross section):** $t_p = 10mm < 16mm$ $\therefore f_{y,p} = 355MPa$ Gross section shear resistance: $V_{Rd,g} = \frac{h_p t_p}{1.27} \frac{f_{y,p}}{\sqrt{3}\gamma_{M0}}$ $= \frac{220 \times 10}{1.27} \times \frac{355}{\sqrt{3}} \times 10^{-3}$ $= 355.05kN$ **Fin plate shear resistance (net section):** $A_{v,net} = t_p(h_p - n_1 d_0)$ $= 10 \times (220 - 3 \times 22)$ $= 1540mm^2$ Net area shear resistance: $V_{Rd,n} = \frac{A_{v,net} f_{u,p}}{\sqrt{3}\gamma_{M2}}$ $= 1540 \times \frac{490}{\sqrt{3} \times 1.25} \times 10^{-3}$ $= 348.53kN$	$h_p = 220mm$ $\gamma_{M0} = 1.0$ (SS EN1993-1-1)

Check 2L – Fin plate resistance (UB 305x165x46)		
Ref	Calculations	Remark
	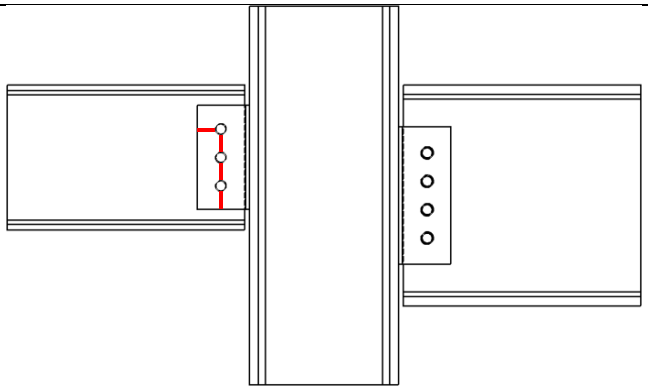 **Fin plate shear resistance (block shear):** For single vertical line of bolts ($n_2 = 1$): Net area subject to tension: $A_{nt} = t_p\left(e_2 - \frac{d_0}{2}\right)$ $= 10 \times (50 - \frac{22}{2})$ $= 390mm^2$ Net area subject to shear: $A_{nv} = t_p(h_p - e_1 - (n_1 - 0.5)d_0)$ $= 10 \times (220 - 50 - (3 - 0.5) \times 22)$ $= 1150mm^2$ $V_{Rd,b} = \left(\frac{0.5 f_{u,p} A_{nt}}{\gamma_{M2}} + \frac{f_{y,p}}{\sqrt{3}}\frac{A_{nv}}{\gamma_{M0}}\right)$ $= \left(\frac{0.5 \times 490 \times 390}{1.25} + \frac{355}{\sqrt{3}}\frac{1150}{1.0}\right) \times 10^{-3}$ $= 312.14kN$ $V_{Rd,min} = \min(V_{Rd,g}; V_{Rd,n}; V_{Rd,b})$ $= \min(355.05kN; 348.53kN; 312.14kN)$ $= 312.14kN > V_{Ed} = 100kN$	OK!

Check 2L – Fin plate resistance (UB 305x165x46)		
Ref	Calculations	Remark
SCI_P358 SS EN1993-1-8	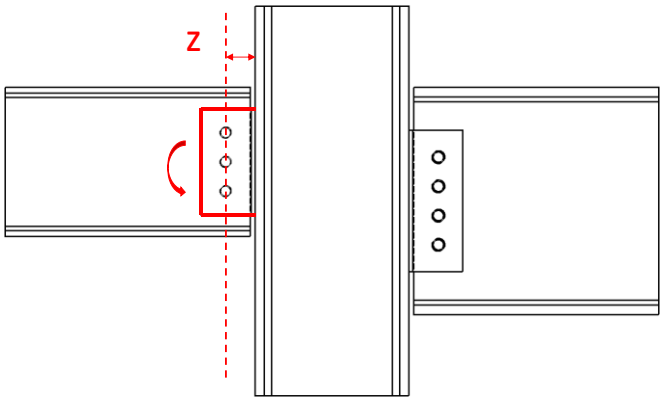 **Fin plate bending:** $h_p = 220mm > 2.73z = 163.8mm$ $\therefore V_{Rd} = \infty$ **Lateral torsional buckling:** $z_p = 60mm < \frac{t_p}{0.15} = 66.7mm$ ∴The fin plate is classified as **Short fin plate** $W_{el,p} = \frac{t_p h_p^2}{6}$ $= \frac{10 \times 220^2}{6}$ $= 80666.67mm^3$ $V_{Rd} = \frac{W_{el,p}}{z}\frac{f_{y,p}}{\gamma_{M0}}$ $= \frac{80666.67 \times 355}{60 \times 1.0} \times 10^{-3}$ $= 477.28kN > V_{Ed} = 100kN$	OK! OK!

Check 3L – Beam web resistance (UB305x165x46)		
Ref	Calculations	Remark
SCI_P358 SS EN1993-1-8	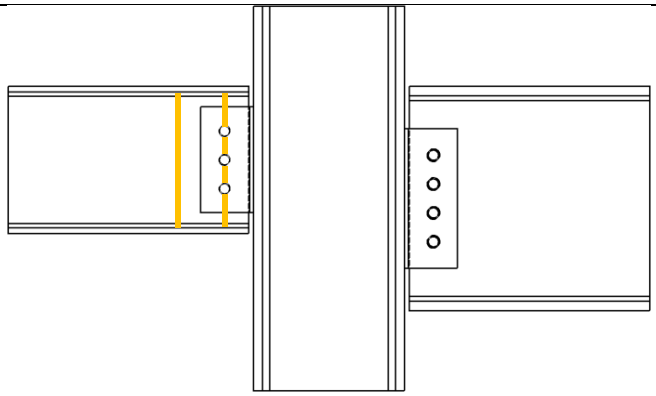 **Beam web shear resistance (gross section):** For unnotched beams (UB305x165x46): $A_V = A_g - 2b_{b1}t_{f,b1} + (t_{w,b1} + 2r_{b1})t_{f,b1}$ $= 5870 - 2 \times 165.7 \times 11.8 + (6.7 + 2 \times 8.9) \times 11.8$ $= 2248.58mm^2$ $V_{Rd,g} = V_{pl,Rd} = \frac{A_V f_{y,b1}}{\sqrt{3}\gamma_{M0}}$ $= 2248.58 \times \frac{355}{\sqrt{3} \times 1.0} \times 10^{-3}$ $= 460.87kN$ **Beam web shear resistance (net section):** $A_{V,net} = A_V - n_1 d_0 t_{w,b1}$ $= 2248.58 - 3 \times 22 \times 6.7$ $= 1806.38mm^2$ $V_{Rd,n} = \frac{A_{V,net} f_{u,b1}}{\sqrt{3}\gamma_{M2}}$ $= 1806.38 \times \frac{490}{\sqrt{3} \times 1.25} \times 10^{-3}$ $= 408.82kN$	

Check 3L – Beam web resistance (UB305x165x46)		
Ref	Calculations	Remark
	$V_{Rd,min} = \min(V_{Rd,g}; V_{Rd,n})$ $= \min(460.87kN; 408.82kN)$ $= 408.82kN > V_{Ed} = 100kN$ **Shear and bending interaction of secondary beam web:** For Short fin plate, shear and bending moment interaction check is NOT necessary	OK!

Check 4L – Welds (UB305x165x46)		
Ref	Calculations	Remark
	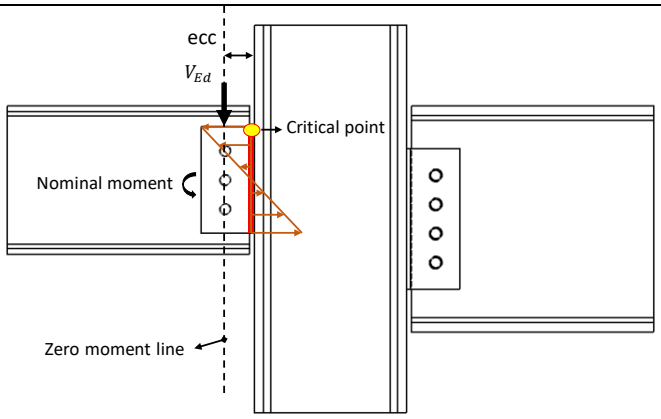 The fin plate to column connection is assumed to be stiffer than the bolt connection due to the presence of the beam web. There is some nominal moment applied on the fillet weld and hence the welding needs to be designed for nominal moment.	
SS EN1993-1-8	Unit throat area: $A_u = 2l = 2 \times 220$ $= 440mm$ Eccentricity between weld and line of action: $ecc = z = 60mm$ Nominal moment due to eccentricity: $M = V_{Ed} ecc$ $= 100 \times 0.060$ $= 6kNm$ Polar moment of inertia: $J = \frac{l^3}{12} = \frac{220^3}{12} = 887333mm^3$ **Critical point:** Vertical stress: $\tau_v = \frac{V_{Ed}}{A_u}$ $= \frac{100}{440}$ $= 0.23kN/mm$	Length of fillet weld: $length\ l = 220mm$

Check 4L – Welds (UB305x165x46)		
Ref	Calculations	Remark
	Transverse stress: $\tau_h = \frac{Mr_{zv}}{2J}$ $= \frac{6000 \times 110}{887333 \times 2}$ $= 0.37kN/mm$ Resultant stress: $\tau_r = \sqrt{\tau_v^2 + \tau_h^2}$ $= \sqrt{0.23^2 + 0.37^2}$ $= 0.44kN/mm$	Vertical distance between critical point and centroid: $r_{zv} = \frac{d}{2}$ $= 110mm$
SCI_P363	Choose fillet weld with 5mm leg length, 3.5mm throat thickness and grade S355 which match beam steel grade: Longitudinal resistance: $F_{w,L,Rd} = 0.84kN/mm$ Transverse resistance: $F_{w,T,Rd} = 1.03kN/mm$ **Simplified method:** $F_{w,L,Rd} = 0.84kN/mm > \tau_{Ed} = 0.44kN/mm$	OK!
	Directional method: $SF = \left(\frac{\tau_{v,Ed}}{F_{w,L,Rd}}\right)^2 + \left(\frac{\tau_{h,Ed}}{F_{w,T,Rd}}\right)^2$ $= \left(\frac{0.23}{0.84}\right)^2 + \left(\frac{0.37}{1.03}\right)^2$ $= 0.21 < 1.00$	OK!

Check 5L – Local shear and bearing resistance of column flange		
Ref	Calculation	Remark
SCI_P358	Local shear resistance of the column (UC305x305x118) flange: $A_v = h_p t_2$ $= 220 \times 18.7$ $= 4114mm^2$ $F_{Rd} = \frac{A_v f_{y,2}}{\sqrt{3}\gamma_{M0}}$ $= \frac{4114 \times 355}{\sqrt{3} \times 1.0} \times 10^{-3}$ $= 819.45kN > \frac{V_{Ed}}{2} = 50kN$	OK!

Check 1R – Bolt group resistance (UB 457x191x98)		
Ref	Calculations	Remark
	Bolt shear resistance: Using class 8.8, M20 bolts with: $A_s = 245mm^2$, $f_{ub} = 800MPa$, $\alpha_v = 0.6$ 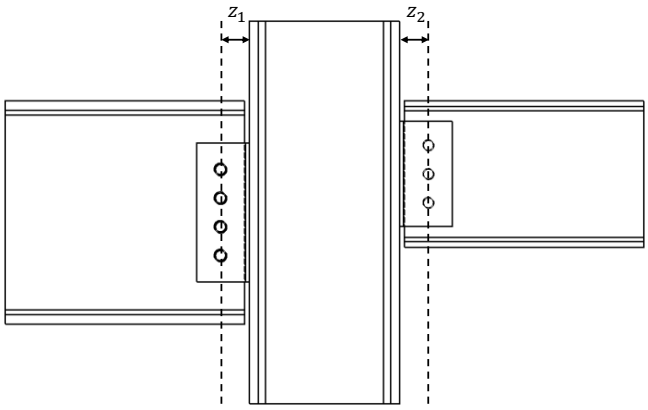 	
SS EN1993-1-8	Shear resistance of a single bolt: $F_{v,Rd} = \frac{\alpha_v f_{ub} A_s}{\gamma_{M2}}$ $= \frac{0.6 \times 800 \times 245}{1.25} \times 10^{-3}$ $= 94.08kN$	$\gamma_{M2} = 1.25$ (refer to NA to SS)
SCI_P358 SN017	For single vertical line of bolts ($n_2 = 1$): $n_1 = 4, n = 4 \times 1 = 4$ $\alpha = 0$ $\beta = \frac{6z}{n_1(n_1+1)p_1}$ $= \frac{6 \times 60mm}{4 \times (4+1) \times 60mm}$ $= 0.30$ $V_{Rd} = \frac{nF_{V,Rd}}{\sqrt{(1+\alpha n)^2 + (\beta n)^2}}$ $= \frac{4 \times 94.08}{\sqrt{(1+0)^2 + (0.3 \times 4)^2}} \times 10^{-3}$ $= 240.91kN > V_{Ed} = 200kN$	OK!

Check 1R – Bolt group resistance (UB 457x191x98)		
Ref	Calculations	Remark
SCI_P358 SS EN1993-1-8	**Bolt bearing resistance in the fin plate:** For bearing resistance in vertical direction of one bolt: $k_1 = \min\left(\frac{2.8e_2}{d_o} - 1.7; \frac{1.4p_2}{d_0} - 1.7; 2.5\right)$ $= \min\left(\frac{2.8 \times 50}{22} - 1.7; 2.5\right)$ $= 2.5$ $\alpha_b = \min\left(\frac{e_1}{3d_0}; \frac{p_1}{3d_0} - \frac{1}{4}; \frac{f_{ub}}{f_{u,p}}; 1.0\right)$ $= \min\left(\frac{55}{3 \times 22}; \frac{60}{3 \times 22} - \frac{1}{4}; \frac{800}{490}; 1.0\right)$ $= 0.66$ $F_{b,ver,Rd} = \frac{k_1 \alpha_b f_{u,p} d t_p}{\gamma_{M2}}$ $= \frac{2.5 \times 0.66 \times 490 \times 20 \times 10}{1.25} \times 10^{-3}$ $= 129.18kN$ For bearing resistance in horizontal direction of one bolt: $k_1 = \min\left(\frac{2.8e_1}{d_o} - 1.7; \frac{1.4p_1}{d_0} - 1.7; 2.5\right)$ $= \min\left(\frac{2.8 \times 55}{22} - 1.7; \frac{1.4 \times 60}{22} - 1.7; 2.5\right)$ $= 2.12$ $\alpha_b = \min\left(\frac{e_2}{3d_0}; \frac{p_2}{3d_0} - \frac{1}{4}; \frac{f_{ub}}{f_{u,p}}; 1.0\right)$ $= \min\left(\frac{50}{3 \times 22}; \frac{800}{490}; 1.0\right)$ $= 0.76$	$\boldsymbol{e_1 = 55.0mm}$ $(1.2d_0 < e_1 < 4t + 40mm)$ $\boldsymbol{p_1 = 60.0mm}$ $(2.2d_0 < p_1 < 14t\ or\ 200mm)$ $\boldsymbol{e_2 = 50.0mm}$ $(1.2d_0 < e_2 < 4t + 40mm)$ $\boldsymbol{p_2 = nil}$ $(2.4d_0 < p_2 < 14t\ or\ 200mm)$

Check 1R – Bolt group resistance (UB 457x191x98)		
Ref	Calculations	Remark
	$F_{b,hor,Rd} = \frac{k_1 \alpha_b f_{u,p} d t_p}{\gamma_{M2}}$ $= \frac{2.12 \times 0.76 \times 490 \times 20 \times 10}{1.25} \times 10^{-3}$ $= 125.81\text{kN}$ **Bolt group bearing resistance:** $V_{Rd} = \frac{n}{\sqrt{\left(\frac{1+\alpha n}{F_{b,ver,Rd}}\right)^2 + \left(\frac{\beta n}{F_{b,hor,Rd}}\right)^2}}$ $= \frac{5}{\sqrt{\left(\frac{1}{129.18}\right)^2 + \left(\frac{0.51 \times 4}{125.81}\right)^2}} \times 10^{-3}$ $= 325.62kN > V_{Ed} = 200kN$	OK!
SCI_P358 SS EN1993-1-8	**Bolt bearing resistance in secondary beam web:** Vertical bearing resistance: $k_1 = \min\left(\frac{2.8e_{2,b}}{d_o} - 1.7; \frac{1.4p_2}{d_0} - 1.7; 2.5\right)$ $= \min\left(\frac{2.8 \times 50}{22} - 1.7; 2.5\right)$ $= 2.5$ $\alpha_b = \min\left(\frac{e_{1,b}}{3d_0}; \frac{p_1}{3d_0} - \frac{1}{4}; \frac{f_{ub}}{f_{u,b1}}; 1.0\right)$ $= \min\left(\frac{143.6}{3 \times 22}; \frac{60}{3 \times 22} - \frac{1}{4}; \frac{800}{490}; 1.0\right)$ $= 0.66$ $F_{b,ver,Rd} = \frac{k_1 \alpha_b f_{u,b1} d t_{w,b1}}{\gamma_{M2}}$ $= \frac{2.5 \times 0.66 \times 490 \times 20 \times 11.4}{1.25} \times 10^{-3}$ $= 147.27kN$	$\boldsymbol{e_{1,b} = 138.6mm}$ $\boldsymbol{e_{2,b} = 50.0mm}$

Check 1R – Bolt group resistance (UB 457x191x98)		
Ref	Calculations	Remark
	Horizontal bearing resistance: $k_1 = \min\left(\frac{2.8e_{1,b}}{d_o} - 1.7; \frac{1.4p_1}{d_0} - 1.7; 2.5\right)$ $= \min\left(\frac{2.8 \times 143.6}{22} - 1.7; \frac{1.4 \times 60}{22} - 1.7; 2.5\right)$ $= 2.12$ $\alpha_b = \min\left(\frac{e_{2,b}}{3d_0}; \frac{p_2}{3d_0} - \frac{1}{4}; \frac{f_{ub}}{f_{u,b1}}; 1.0\right)$ $= \min\left(\frac{50}{3 \times 22}; \frac{800}{490}; 1.0\right)$ $= 0.76$ $F_{b,hor,Rd} = \frac{k_1 \alpha_b f_{u,b1} d t_{w,b1}}{\gamma_{M2}}$ $= \frac{2.12 \times 0.76 \times 490 \times 20 \times 11.4}{1.25} \times 10^{-3}$ $= 143.42kN$ **Bolt group bearing resistance:** $V_{Rd} = \frac{n}{\sqrt{\left(\frac{1+\alpha n}{F_{b,ver,Rd}}\right)^2 + \left(\frac{\beta n}{F_{b,hor,Rd}}\right)^2}}$ $= \frac{4}{\sqrt{\left(\frac{1}{147.27}\right)^2 + \left(\frac{0.5 \times 4}{143.42}\right)^2}} \times 10^{-3}$ $= 371.20kN > V_{Ed} = 200kN$	OK!

Check 2R – Fin plate resistance (UB457x191x98)		
Ref	Calculations	Remark
SS EN1993-1-8 SCI_P358	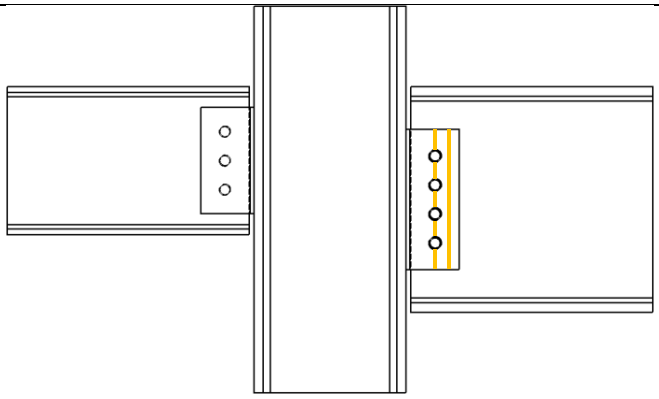 **Fin plate shear resistance (gross section):** $t_p = 10mm < 16mm$ $\therefore f_{y,p} = 355MPa$ Gross section shear resistance: $V_{Rd,g} = \frac{h_p t_p}{1.27} \frac{f_{y,p}}{\sqrt{3}\gamma_{M0}}$ $= \frac{290 \times 10}{1.27} \times \frac{355}{\sqrt{3}} \times 10^{-3}$ $= 468.02kN$ **Fin plate shear resistance (net section):** $A_{v,net} = t_p(h_p - n_1 d_0)$ $= 10 \times (290 - 4 \times 22)$ $= 2020mm^2$ Net area shear resistance: $V_{Rd,n} = \frac{A_{v,net} f_{u,p}}{\sqrt{3}\gamma_{M2}}$ $= 2020 \times \frac{490}{\sqrt{3} \times 1.25} \times 10^{-3}$ $= 457.17kN$	$h_p = 290mm$ $\gamma_{M0} = 1.0$ (SS EN1993-1-1)

Check 2R – Fin plate resistance (UB457x191x98)		
Ref	Calculations	Remark
	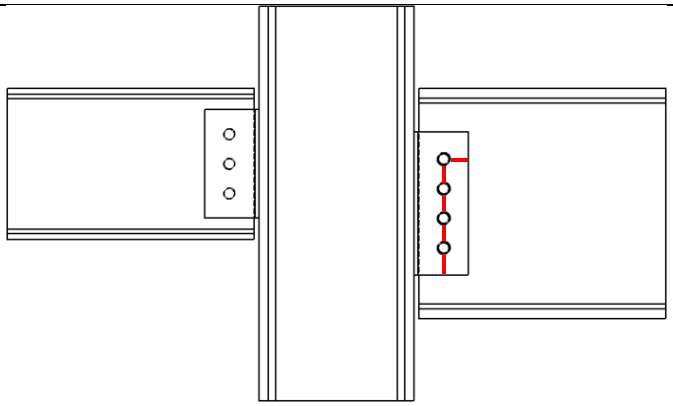 **Fin plate shear resistance (block shear):** For single vertical line of bolts ($n_2 = 1$): Net area subject to tension: $A_{nt} = t_p\left(e_2 - \frac{d_0}{2}\right)$ $= 10 \times (50 - \frac{22}{2})$ $= 390mm^2$ Net area subject to shear: $A_{nv} = t_p(h_p - e_1 - (n_1 - 0.5)d_0)$ $= 10 \times (290 - 55 - (4 - 0.5) \times 22)$ $= 1580mm^2$ $V_{Rd,b} = \left(\frac{0.5 f_{u,p} A_{nt}}{\gamma_{M2}} + \frac{f_{y,p}}{\sqrt{3}}\frac{A_{nv}}{\gamma_{M0}}\right)$ $= \left(\frac{0.5 \times 490 \times 390}{1.25} + \frac{355}{\sqrt{3}}\frac{1580}{1.0}\right) \times 10^{-3}$ $= 400.28kN$ $V_{Rd,min} = \min(V_{Rd,g}; V_{Rd,n}; V_{Rd,b})$ $= \min(468.02kN; 457.17kN; 400.28kN)$ $= 400.28kN > V_{Ed} = 200kN$	OK!

Check 2R – Fin plate resistance (UB457x191x98)		
Ref	Calculations	Remark
SCI_P358 SS EN1993-1-8	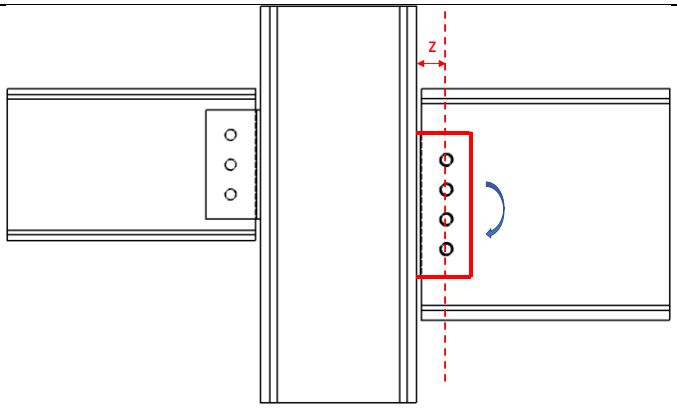 **Fin plate bending:** $h_p = 290mm > 2.73z = 163.8mm$ $\therefore V_{Rd} = \infty$ **Lateral torsional buckling:** $z_p = 60mm < \frac{t_p}{0.15} = 66.67mm$ ∴The fin plate is classified as **Short fin plate** $W_{el,p} = \frac{t_p h_p^2}{6}$ $= \frac{10 \times 290^2}{6}$ $= 140166.7mm^3$ $V_{Rd} = \frac{W_{el,p}}{z} \frac{f_{y,p}}{\gamma_{M0}}$ $= \frac{140166.7 \times 355}{60 \times 1.0} \times 10^{-3}$ $= 829.32kN > V_{Ed} = 200kN$	OK! OK!

Check 3R – Beam web resistance (UB457x191x98)		
Ref	Calculations	Remark
SCI_P358 SS EN1993-1-8	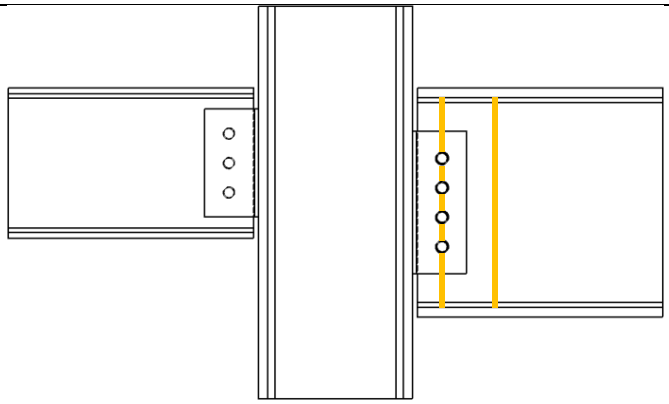 **Beam web shear resistance (gross section):** For unnotched beams (UB457x191x98): $A_V = A_g - 2b_{b1}t_{f,b1} + (t_{w,b1} + 2r_{b1})t_{f,b1}$ $= 12500 - 2 \times 192.8 \times 19.6 + (11.4 + 2 \times 10.2) \times 19.6$ $= 5565.52mm^2$ $V_{Rd,g} = V_{pl,Rd} = \frac{A_V f_{y,b1}}{\sqrt{3}\gamma_{M0}}$ $= 5565.52 \times \frac{355}{\sqrt{3} \times 1.0} \times 10^{-3}$ $= 1140.71kN$ **Beam web shear resistance (net section):** $A_{V,net} = A_V - n_1 d_0 t_{w,b1}$ $= 5565.52 - 4 \times 22 \times 11.4$ $= 4562.32mm^2$ $V_{Rd,n} = \frac{A_{V,net} f_{u,b1}}{\sqrt{3}\gamma_{M2}}$ $= 4562.32 \times \frac{490}{\sqrt{3} \times 1.25} \times 10^{-3}$ $= 1032.55kN$	

Check 3R – Beam web resistance (UB457x191x98)		
Ref	Calculations	Remark
	$V_{Rd,min} = \min(V_{Rd,g}; V_{Rd,n})$ $= \min(1140.71kN; 1035.55kN)$ $= 1035.55kN > V_{Ed} = 200kN$ **Shear and bending interaction of secondary beam web:** For Short fin plate, shear and bending moment interaction check is NOT necessary	

Check 4R – Welds (UB457x191x98)		
Ref	Calculations	Remark
	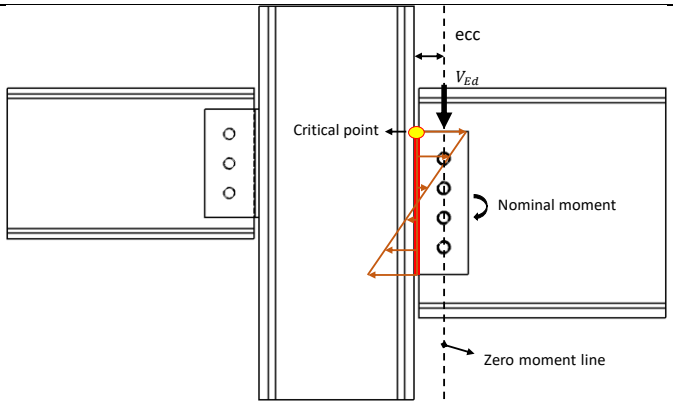 The fin plate to column connection is assumed to be stiffer than the bolt connection due to the presence of the beam web. There is some nominal moment applied on the fillet weld and hence the welding needs to be designed for nominal moment.	
SS EN1993-1-8	Unit throat area: $A_u = 2l = 2 \times 290$ $= 580mm$ Eccentricity between weld and line of action: $ecc = z = 60mm$ Nominal moment due to eccentricity: $M = V_{Ed}ecc$ $= 200 \times 0.060$ $= 12kNm$ Polar moment of inertia: $J = \frac{l^3}{12} = \frac{290^3}{12} = 2032417mm^3$ **Critical point:** Vertical stress: $\tau_v = \frac{V_{Ed}}{A_u}$ $= \frac{200}{580}$ $= 0.34kN/mm$	Length of fillet weld: $length\ l = 290mm$

Check 4R – Welds (UB457x191x98)		
Ref	Calculations	Remark
	Transverse stress: $\tau_h = \frac{Mr_{zv}}{2J}$ $= \frac{12000 \times 145}{2032417 \times 2}$ $= 0.43kN/mm$ Resultant stress: $\tau_r = \sqrt{\tau_v^2 + \tau_h^2}$ $= \sqrt{0.34^2 + 0.43^2}$ $= 0.55kN/mm$	
SCI_P363	Choose fillet weld with 5mm leg length, 3.5mm throat thickness and grade S355 which match beam steel grade: Longitudinal resistance: $F_{w,L,Rd} = 0.84kN/mm$ Transverse resistance: $F_{w,T,Rd} = 1.03kN/mm$ **Simplified method:** $F_{w,L,Rd} = 0.84kN/mm > \tau_{Ed} = 0.55kN/mm$	OK!
	Directional method: $SF = \left(\frac{\tau_{v,Ed}}{F_{w,L,Rd}}\right)^2 + \left(\frac{\tau_{h,Ed}}{F_{w,T,Rd}}\right)^2$ $= \left(\frac{0.34}{0.84}\right)^2 + \left(\frac{0.43}{1.03}\right)^2$ $= 0.34 < 1.00$	OK!

Check 5R – Local shear and bearing resistance of column flange		
Ref	Calculation	Remark
SCI_P358	Local shear resistance of the column (UC305x305x118) flange: $A_v = h_p t_2$ $= 290 \times 18.7$ $= 5423mm^2$ $F_{Rd} = \frac{A_v f_{y,2}}{\sqrt{3}\gamma_{M0}}$ $= \frac{5423 \times 345}{\sqrt{3} \times 1.0} \times 10^{-3}$ $= 1080.19kN > \frac{V_{Ed}}{2} = 100kN$	OK!

Note:

Since the design forces from the beams acting on two sides of the column are different, there is an unbalanced moment induced on the column. Hence, the column design needs to be designed for the unbalanced moment.

2.3.7 Example 5 – Two-sided Beam-to-Column extended fin plate connection in minor axis with extended fin plate

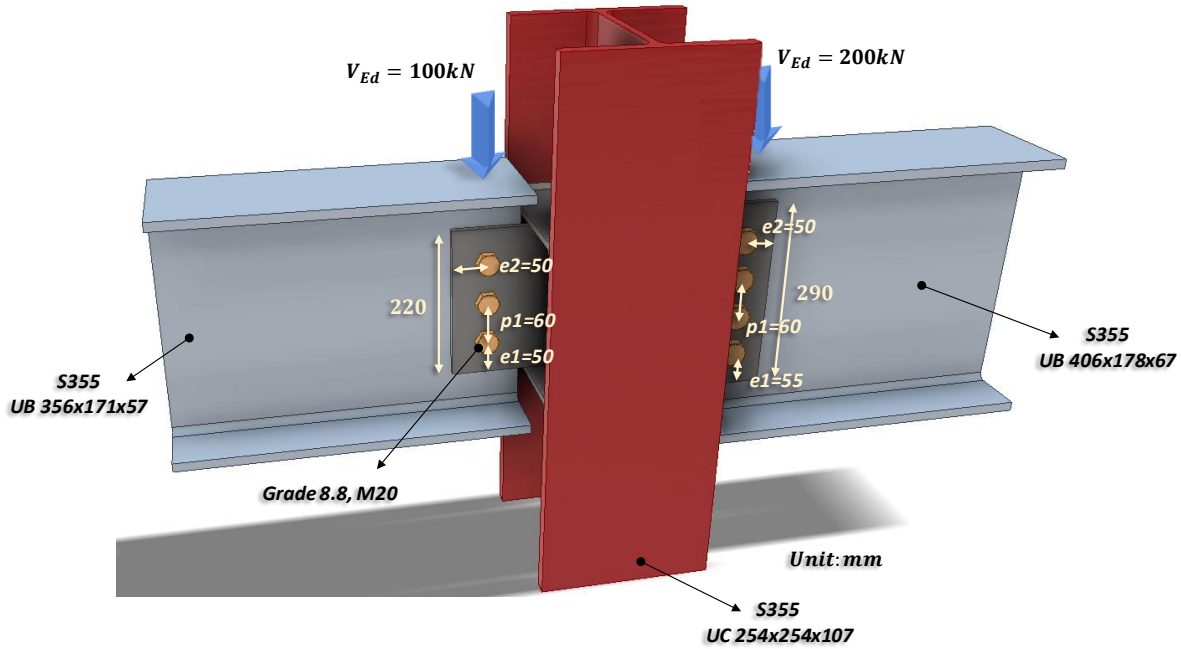

Check 1L – Bolt group resistance (UB356x171x57)		
Ref	Calculations	Remark
	Bolt resistance: Using Gr8.8, M20 bolts with: $A_s = 245mm^2; f_{ub} = 800MPa;$ $\alpha_v = 0.6$ 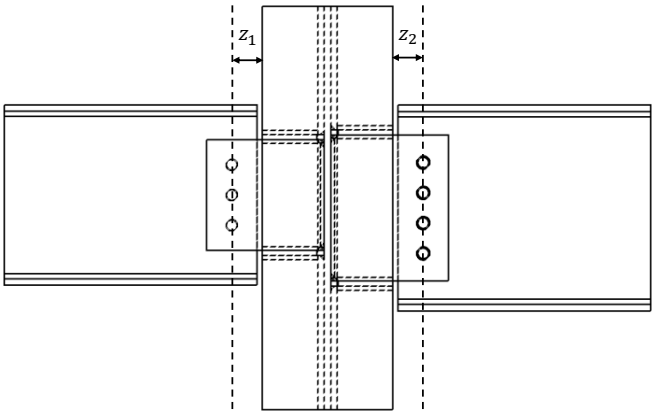 	
SS EN1993-1-8	Shear resistance of a single bolt: $F_{v,Rd} = \frac{\alpha_v f_{ub} A_s}{\gamma_{M2}}$ $= \frac{0.6 \times 800 \times 245}{1.25} \times 10^{-3}$ $= 94.08kN$	$\gamma_{M2} = 1.25$ (refer to NA to SS)
SN017	For single vertical line of bolts ($n_2 = 1$): $\alpha = 0$ $\beta = \frac{6z}{n_1(n_1+1)p_1}$ $= \frac{6 \times 60mm}{3 \times (3+1) \times 60mm}$ $= 0.50$ $n_1 = 3, n = 3 \times 1 = 3$ $V_{Rd} = \frac{nF_{V,Rd}}{\sqrt{(1+\alpha n)^2 + (\beta n)^2}}$ $= \frac{3 \times 94.08}{\sqrt{(1+0)^2 + (0.50 \times 3)^2}} \times 10^{-3}$ $= 156.56kN > V_{Ed} = 100kN$	OK!

Check 1L – Bolt group resistance (UB356x171x57)		
Ref	Calculations	Remark
SCI_P358 SS EN1993-1-8	**Bolt bearing resistance in the fin plate:** For bearing resistance in vertical direction of one bolt: $k_1 = \min\left(\frac{2.8e_2}{d_o} - 1.7; \frac{1.4p_2}{d_0} - 1.7; 2.5\right)$ $= \min\left(\frac{2.8 \times 50}{22} - 1.7; 2.5\right)$ $= 2.5$ $\alpha_b = \min\left(\frac{e_1}{3d_0}; \frac{p_1}{3d_0} - \frac{1}{4}; \frac{f_{ub}}{f_{u,p}}; 1.0\right)$ $= \min\left(\frac{50}{3 \times 22}; \frac{60}{3 \times 22} - \frac{1}{4}; \frac{800}{490}; 1.0\right)$ $= 0.66$ $F_{b,ver,Rd} = \frac{k_1 \alpha_b f_{u,p} d t_p}{\gamma_{M2}}$ $= \frac{2.5 \times 0.66 \times 490 \times 20 \times 10}{1.25} \times 10^{-3}$ $= 129.18kN$ For bearing resistance in horizontal direction of one bolt: $k_1 = \min\left(\frac{2.8e_1}{d_o} - 1.7; \frac{1.4p_1}{d_0} - 1.7; 2.5\right)$ $= \min\left(\frac{2.8 \times 50}{22} - 1.7; \frac{1.4 \times 60}{22} - 1.7; 2.5\right)$ $= 2.12$ $\alpha_b = \min\left(\frac{e_2}{3d_0}; \frac{p_2}{3d_0} - \frac{1}{4}; \frac{f_{ub}}{f_{u,p}}; 1.0\right)$ $= \min\left(\frac{50}{3 \times 22}; \frac{800}{490}; 1.0\right)$ $= 0.76$	$\boldsymbol{e_1 = 50.0mm}$ $(1.2d_0 < e_1 < 4t + 40mm)$ $\boldsymbol{p_1 = 60.0mm}$ $(2.2d_0 < p_1 < 14t\ or\ 200mm)$ $\boldsymbol{e_2 = 50.0mm}$ $(1.2d_0 < e_2 < 4t + 40mm)$ $\boldsymbol{p_2 = nil}$ $(2.4d_0 < p_2 < 14t\ or\ 200mm)$

Check 1L – Bolt group resistance (UB356x171x57)		
Ref	Calculations	Remark
	$F_{b,hor,Rd} = \frac{k_1 \alpha_b f_{u,p} d t_p}{\gamma_{M2}}$ $= \frac{2.12 \times 0.76 \times 490 \times 20 \times 10}{1.25} \times 10^{-3}$ $= 125.81\text{kN}$ **Bolt group bearing resistance:** $V_{Rd} = \frac{n}{\sqrt{\left(\frac{1+\alpha n}{F_{b,ver,Rd}}\right)^2 + \left(\frac{\beta n}{F_{b,hor,Rd}}\right)^2}}$ $= \frac{3}{\sqrt{\left(\frac{1}{129.18}\right)^2 + \left(\frac{0.50 \times 3}{125.81}\right)^2}} \times 10^{-3}$ $= 211.04kN > V_{Ed} = 100kN$	OK!
SCI_P358 SS EN1993-1-8	**Bolt bearing resistance in secondary beam web:** Vertical bearing resistance: $k_1 = \min\left(\frac{2.8e_{2,b}}{d_o} - 1.7; \frac{1.4p_2}{d_0} - 1.7; 2.5\right)$ $= \min\left(\frac{2.8 \times 50}{22} - 1.7; 2.5\right)$ $= 2.5$ $\alpha_b = \min\left(\frac{e_{1,b}}{3d_0}; \frac{p_1}{3d_0} - \frac{1}{4}; \frac{f_{ub}}{f_{u,b1}}; 1.0\right)$ $= \min\left(\frac{119}{3 \times 22}; \frac{60}{3 \times 22} - \frac{1}{4}; \frac{800}{490}; 1.0\right)$ $= 0.66$ $F_{b,ver,Rd} = \frac{k_1 \alpha_b f_{u,b1} d t_{w,b1}}{\gamma_{M2}}$ $= \frac{2.5 \times 0.66 \times 490 \times 20 \times 8.1}{1.25} \times 10^{-3}$ $= 104.64kN$	$\boldsymbol{e_{1,b} = 119mm}$ $\boldsymbol{e_{2,b} = 50.0mm}$

Check 1L – Bolt group resistance (UB356x171x57)		
Ref	Calculations	Remark
	Horizontal bearing resistance: $k_1 = \min\left(\frac{2.8e_{1,b}}{d_o} - 1.7; \frac{1.4p_1}{d_0} - 1.7; 2.5\right)$ $= \min\left(\frac{2.8 \times 119}{22} - 1.7; \frac{1.4 \times 60}{22} - 1.7; 2.5\right)$ $= 2.12$ $\alpha_b = \min\left(\frac{e_{2,b}}{3d_0}; \frac{p_2}{3d_0} - \frac{1}{4}; \frac{f_{ub}}{f_{u,b1}}; 1.0\right)$ $= \min\left(\frac{50}{3 \times 22}; \frac{800}{490}; 1.0\right)$ $= 0.76$ $F_{b,hor,Rd} = \frac{k_1 \alpha_b f_{u,b1} d t_{w,b1}}{\gamma_{M2}}$ $= \frac{2.12 \times 0.76 \times 490 \times 20 \times 8.1}{1.25} \times 10^{-3}$ $= 101.90kN$ **Bolt group bearing resistance:** $V_{Rd} = \frac{n}{\sqrt{\left(\frac{1 + \alpha n}{F_{b,ver,Rd}}\right)^2 + \left(\frac{\beta n}{F_{b,hor,Rd}}\right)^2}}$ $= \frac{3}{\sqrt{\left(\frac{1}{104.64}\right)^2 + \left(\frac{0.5 \times 3}{101.90}\right)^2}}$ $= 170.94kN > V_{Ed} = 100kN$	OK!

Check 2L – Fin plate resistance (UB356x171x57)		
Ref	Calculations	Remark
SS EN1993-1-8 SCI_P358	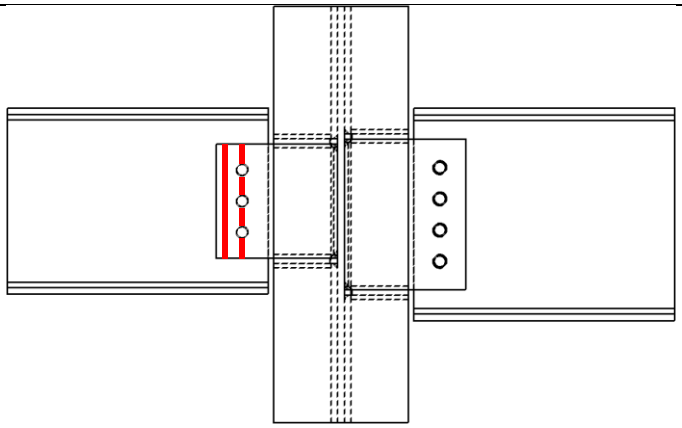 **Fin plate shear resistance (gross section):** $t_p = 10mm < 16mm$ $\therefore f_{y,p} = 355MPa$ Gross section shear resistance: $V_{Rd,g} = \frac{h_p t_p}{1.27} \frac{f_{y,p}}{\sqrt{3}\gamma_{M0}}$ $= \frac{220 \times 10}{1.27} \times \frac{355}{\sqrt{3}} \times 10^{-3}$ $= 355.05N$ **Fin plate shear resistance (net section):** $A_{v,net} = t_p(h_p - n_1 d_0)$ $= 10 \times (220 - 3 \times 22)$ $= 1540mm^2$ Net area shear resistance: $V_{Rd,n} = \frac{A_{v,net} f_{u,p}}{\sqrt{3}\gamma_{M2}}$ $= 1540 \times \frac{490}{\sqrt{3} \times 1.25} \times 10^{-3}$ $= 348.53kN$	$h_p = 220mm$ $\gamma_{M0} = 1.0$ (SS EN1993-1-1)

Check 2L – Fin plate resistance (UB356x171x57)		
Ref	Calculations	Remark
	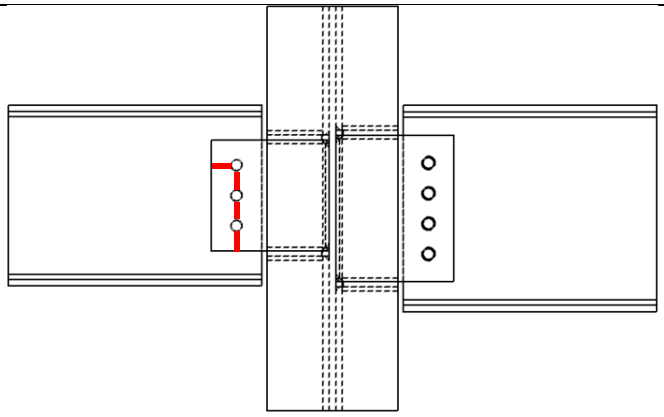 **Fin plate shear resistance (block shear):** For single vertical line of bolts ($n_2 = 1$): Net area subject to tension: $A_{nt} = t_p\left(e_2 - \frac{d_0}{2}\right)$ $= 10 \times (50 - \frac{22}{2})$ $= 390mm^2$ Net area subject to shear: $A_{nv} = t_p(h_p - e_1 - (n_1 - 0.5)d_0)$ $= 10 \times (220 - 50 - (3 - 0.5) \times 22)$ $= 1150mm^2$ $V_{Rd,b} = \left(\frac{0.5 f_{u,p} A_{nt}}{\gamma_{M2}} + \frac{f_{y,p}}{\sqrt{3}}\frac{A_{nv}}{\gamma_{M0}}\right)$ $= \left(\frac{0.5 \times 490 \times 390}{1.25} + \frac{355}{\sqrt{3}}\frac{1150}{1.0}\right) \times 10^{-3}$ $= 312.14kN$ $V_{Rd,min} = \min(V_{Rd,g}; V_{Rd,n}; V_{Rd,b})$ $= \min(355.05kN; 348.53kN; 312.14kN)$ $= 312.14kN > V_{Ed} = 100kN$	OK!

Check 2L – Fin plate resistance (UB356x171x57)		
Ref	Calculations	Remark
SCI_P358 SS EN1993-1-8	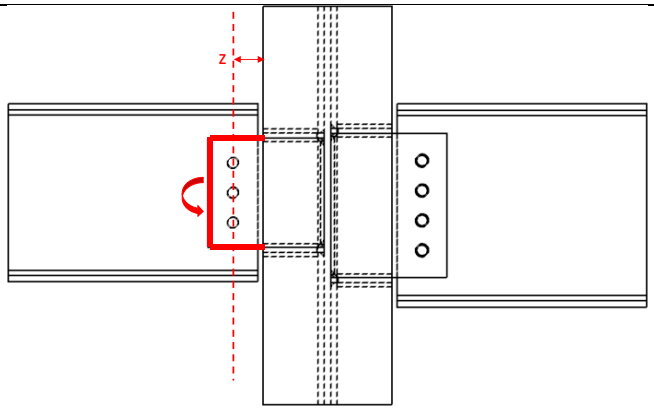 **Fin plate bending:** $h_p = 220mm > 2.73z = 163.8mm$ $\therefore V_{Rd} = \infty$ **Lateral torsional buckling:** $z_p = 60mm < \frac{t_p}{0.15} = 66.7mm$ ∴The fin plate is classified as **Short fin plate** $W_{el,p} = \frac{t_p h_p^2}{6}$ $= \frac{10 \times 220^2}{6}$ $= 80666.67mm^3$ $V_{Rd} = \frac{W_{el,p}}{z}\frac{f_{y,p}}{\gamma_{M0}}$ $= \frac{80666.67 \times 355}{60 \times 1.0}$ $= 477.28kN > V_{Ed} = 100kN$	OK! OK!

Check 3L – Secondary beam web resistance (UB356x171x57)		
Ref	Calculations	Remark
SCI_P358 SS EN1993-1-8	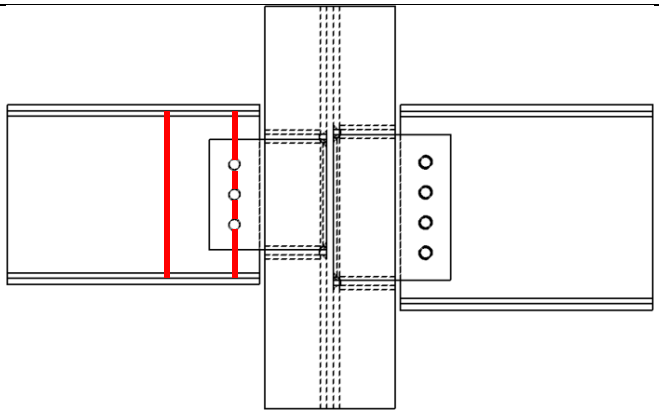 **Beam web shear resistance (gross section):** For unnotched beams (UB356x171x57): $A_V = A_g - 2b_{b1}t_{f,b1} + (t_{w,b1} + 2r_{b1})t_{f,b1}$ $= 7260 - 2 \times 172.2 \times 13 + (8.1 + 2 \times 10.2) \times 13$ $= 3153.3mm^2$ $V_{Rd,g} = V_{pl,Rd} = \frac{A_V f_{y,b1}}{\sqrt{3}\gamma_{M0}}$ $= 3153.3 \times \frac{355}{\sqrt{3} \times 1.0} \times 10^{-3}$ $= 646.30kN$ **Beam web shear resistance (net section):** $A_{V,net} = A_V - n_1 d_0 t_{w,b1}$ $= 3153.3 - 3 \times 22 \times 8.1$ $= 2618.7mm^2$ $V_{Rd,n} = \frac{A_{V,net} f_{u,b1}}{\sqrt{3}\gamma_{M2}}$ $= 2618.7 \times \frac{490}{\sqrt{3} \times 1.25} \times 10^{-3}$ $= 592.67kN$	

Check 3L – Secondary beam web resistance (UB356x171x57)		
Ref	Calculations	Remark
	$V_{Rd,min} = \min(V_{Rd,g}; V_{Rd,n}; V_{Rd,b})$ $= \min(646.30kN; 592.67kN)$ $= 592.67kN > V_{Ed} = 100kN$ **Shear and bending interaction of secondary beam web:** For Short fin plate, shear and bending moment interaction check is NOT necessary	OK!

Check 4L – Welds (C shape fillet weld) (UB356x171x57)		
Ref	Calculations	Remark
SS EN1993-1-8	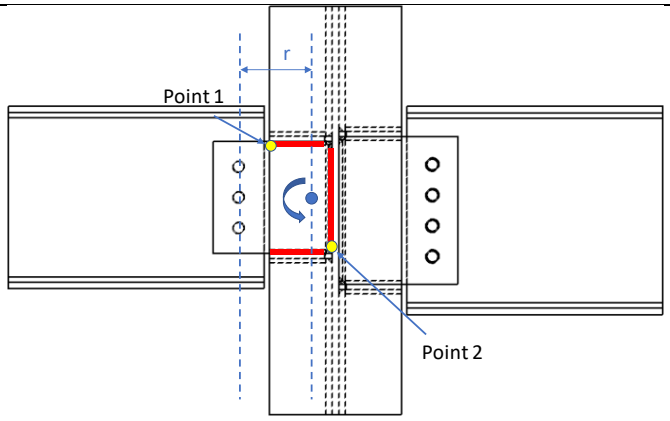 Location of centre of gravity of welds group: $\bar{x} = \frac{b^2}{(2b + d)}$ $= \frac{108^2}{(2 \times 108 + 190)}$ $= 23.9mm$ $\bar{y} = \frac{d}{2}$ $= \frac{190}{2}$ $= 95mm$ Unit throat area: $A_u = 2b + d$ $= 2 \times 108 + 190$ $= 406mm$ Moment arm between applied force and weld centre: $r = 159.1mm$ Induced moment on welds: $M = V_{Ed} \times r$ $= 100 \times 159.1$ $= 15910kNmm$	Length of the fillet welds: Horizontal length: $b = 108mm$ Depth: $d = 190mm$

Check 4L – Welds (C shape fillet weld) (UB356x171x57)		
Ref	Calculations	Remark
	Polar moment of inertia: $J = \frac{8b^3 + 6bd^2 + d^3}{12} - \frac{b^4}{2b + d}$ $= \frac{8 \times 108^3 + 6 \times 108 \times 190 + 190^3}{12} - \frac{108^4}{2 \times 108 + 190}$ $= 3025696mm^3$ **End-point 1:** Horizontal distance from centroid: $r_{zh} = b - \bar{x}$ $= 108 - 23.9$ $= 84.10mm$ Vertical distance from centroid: $r_{zv} = \bar{y} + cope\ hole\ size$ $= 95 + 15mm$ $= 110mm$ Vertical stress: $\tau_v = \frac{V_{Ed}}{2A_u} + \frac{Mr_{zh}}{2J}$ $= \frac{100}{2 \times 406} + \frac{15910 \times 84.10}{2 \times 3025696}$ $= 0.344kN/mm$ Horizontal stress: $\tau_h = \frac{Mr_{zv}}{2J}$ $= \frac{15910 \times 110}{2 \times 3025696}$ $= 0.289kN/mm$	

Check 4L – Welds (C shape fillet weld) (UB356x171x57)		
Ref	Calculations	Remark
	Resultant stress: $\tau_r = \sqrt{\tau_v^2 + \tau_h^2}$ $= \sqrt{0.344^2 + 0.289^2}$ $= 0.45kN/mm$ **End-point 2:** Horizontal distance from centroid: $r_{zh} = \bar{x} + cope\ hole\ size$ $= 23.9 + 15mm = 38.90mm$ Vertical distance from centroid: $r_{zv} = d - \bar{y}$ $= 190 - 95$ $= 95mm$ Vertical stress: $\tau_v = \frac{V_{Ed}}{2A_u} + \frac{Mr_{zh}}{2J}$ $= \frac{100}{2 \times 406} + \frac{15910 \times 38.90}{2 \times 3025696}$ $= 0.225kN/mm$ Horizontal stress: $\tau_h = \frac{Mr_{zv}}{2J}$ $= \frac{15910 \times 95}{2 \times 3025696}$ $= 0.250kN/mm$ Resultant stress: $\tau_r = \sqrt{\tau_v^2 + \tau_h^2}$ $= \sqrt{0.225^2 + 0.250^2}$ $= 0.34kN/mm$	

Check 4L – Welds (C shape fillet weld) (UB356x171x57)		
Ref	Calculations	Remark
	Choose fillet weld with 5mm leg length, 3.5mm throat thickness and grade S355 which match beam steel grade: Longitudinal resistance: $F_{w,L,Rd} = 0.84kN/mm$ Transverse resistance: $F_{w,T,Rd} = 1.03kN/mm$ **Simplified method:** $F_{w,L,Rd} = 0.78kN/mm > \tau_{Ed} = 0.45kN/mm$ **Directional method:** $SF = \left(\frac{\tau_{h,Ed}}{F_{w,L,Rd}}\right)^2 + \left(\frac{\tau_{v,Ed}}{F_{w,T,Rd}}\right)^2$ $= \left(\frac{0.34}{0.84}\right)^2 + \left(\frac{0.29}{1.03}\right)^2$ $= 0.25 < 1.00$	 OK! OK!

Note:

The fillet welds between the stiffeners and column adopt the same size of the fillet weld used for the fin plate. The fillet welds for stiffeners will be one side fillet weld due to space constraint.

Check 5L – Local shear resistance of column web (UC254x254x107)		
Ref	Calculations	Remark
SCI_P358	Local shear resistance of the column (UC254x254x107) web: $A_v = h_p t_2$ $= 220 \times 12.8$ $= 2816mm^2$ $F_{Rd} = \frac{A_v f_{y,2}}{\sqrt{3}\gamma_{M0}}$ $= \frac{2816 \times 355}{\sqrt{3} \times 1.0} \times 10^{-3}$ $= 577.17kN > \frac{V_{Ed}}{2} = 50kN$	OK!

Check 1R – Bolt group resistance (UB406x178x67)		
Ref	Calculations	Remark
	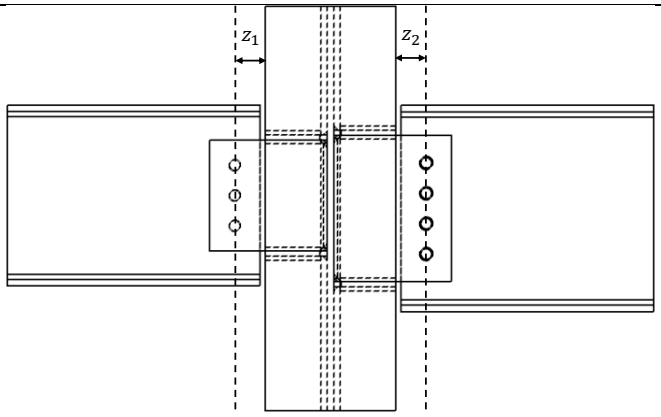 **Bolt shear resistance:** Using class 8.8, M20 bolts with: $A_s = 245mm^2$, $f_{ub} = 800MPa$, $\alpha_v = 0.6$	
SS EN1993-1-8	Shear resistance of a single bolt: $F_{v,Rd} = \frac{\alpha_v f_{ub} A_s}{\gamma_{M2}}$ $= \frac{0.6 \times 800 \times 245}{1.25} \times 10^{-3}$ $= 94.08kN$ For single vertical line of bolts ($n_2 = 1$): $n_1 = 4, n = 4 \times 1 = 4$ $\alpha = 0$ $\beta = \frac{6z}{n_1(n_1+1)p_1}$ $= \frac{6 \times 60mm}{4 \times (4+1) \times 60mm}$ $= 0.30$ $V_{Rd} = \frac{nF_{V,Rd}}{\sqrt{(1+\alpha n)^2 + (\beta n)^2}}$ $= \frac{4 \times 94.08}{\sqrt{(1+0)^2 + (0.3 \times 4)^2}} \times 10^{-3}$ $= 240.91kN > V_{Ed} = 200kN$	$\gamma_{M2} = 1.25$ (refer to NA to SS) OK!

Check 1R – Bolt group resistance (UB406x178x67)		
Ref	Calculations	Remark
SCI_P358 SS EN1993-1-8	**Bolt bearing resistance in the fin plate:** For bearing resistance in vertical direction of one bolt: $k_1 = \min\left(\frac{2.8e_2}{d_o} - 1.7; \frac{1.4p_2}{d_0} - 1.7; 2.5\right)$ $= \min\left(\frac{2.8 \times 50}{22} - 1.7; 2.5\right)$ $= 2.5$ $\alpha_b = \min\left(\frac{e_1}{3d_0}; \frac{p_1}{3d_0} - \frac{1}{4}; \frac{f_{ub}}{f_{u,p}}; 1.0\right)$ $= \min\left(\frac{55}{3 \times 22}; \frac{60}{3 \times 22} - \frac{1}{4}; \frac{800}{490}; 1.0\right)$ $= 0.66$ $F_{b,ver,Rd} = \frac{k_1 \alpha_b f_{u,p} d t_p}{\gamma_{M2}}$ $= \frac{2.5 \times 0.66 \times 490 \times 20 \times 10}{1.25} \times 10^{-3}$ $= 129.18kN$ For bearing resistance in horizontal direction of one bolt: $k_1 = \min\left(\frac{2.8e_1}{d_o} - 1.7; \frac{1.4p_1}{d_0} - 1.7; 2.5\right)$ $= \min\left(\frac{2.8 \times 55}{22} - 1.7; \frac{1.4 \times 60}{22} - 1.7; 2.5\right)$ $= 2.12$ $\alpha_b = \min\left(\frac{e_2}{3d_0}; \frac{p_2}{3d_0} - \frac{1}{4}; \frac{f_{ub}}{f_{u,p}}; 1.0\right)$ $= \min\left(\frac{50}{3 \times 22}; \frac{800}{490}; 1.0\right)$ $= 0.76$	$\boldsymbol{e_1 = 55.0mm}$ $(1.2d_0 < e_1 < 4t + 40mm)$ $\boldsymbol{p_1 = 60.0mm}$ $(2.2d_0 < p_1 < 14t\ or\ 200mm)$ $\boldsymbol{e_2 = 50.0mm}$ $(1.2d_0 < e_2 < 4t + 40mm)$ $\boldsymbol{p_2 = nil}$ $(2.4d_0 < p_2 < 14t\ or\ 200mm)$

Check 1R – Bolt group resistance (UB406x178x67)		
Ref	Calculations	Remark
	$F_{b,hor,Rd} = \frac{k_1 \alpha_b f_{u,p} d t_p}{\gamma_{M2}}$ $= \frac{2.12 \times 0.76 \times 490 \times 20 \times 10}{1.25} \times 10^{-3}$ $= 125.81\text{kN}$ **Bolt group bearing resistance:** $V_{Rd} = \frac{n}{\sqrt{\left(\frac{1+\alpha n}{F_{b,ver,Rd}}\right)^2 + \left(\frac{\beta n}{F_{b,hor,Rd}}\right)^2}}$ $= \frac{5}{\sqrt{\left(\frac{1}{129.18}\right)^2 + \left(\frac{0.51 \times 4}{125.81}\right)^2}} \times 10^{-3}$ $= 325.62kN > V_{Ed} = 200kN$	OK!
SCI_P358 SS EN1993-1-8	**Bolt bearing resistance in secondary beam web:** Vertical bearing resistance: $k_1 = \min\left(\frac{2.8e_{2,b}}{d_o} - 1.7; \frac{1.4p_2}{d_0} - 1.7; 2.5\right)$ $= \min\left(\frac{2.8 \times 50}{22} - 1.7; 2.5\right)$ $= 2.5$ $\alpha_b = \min\left(\frac{e_{1,b}}{3d_0}; \frac{p_1}{3d_0} - \frac{1}{4}; \frac{f_{ub}}{f_{u,b1}}; 1.0\right)$ $= \min\left(\frac{114.7}{3 \times 22}; \frac{60}{3 \times 22} - \frac{1}{4}; \frac{800}{490}; 1.0\right)$ $= 0.66$ $F_{b,ver,Rd} = \frac{k_1 \alpha_b f_{u,b1} d t_{w,b1}}{\gamma_{M2}}$ $= \frac{2.5 \times 0.66 \times 490 \times 20 \times 8.8}{1.25} \times 10^{-3}$ $= 113.68kN$	$\boldsymbol{e_{1,b} = 114.7mm}$ $\boldsymbol{e_{2,b} = 50.0mm}$

Check 1R – Bolt group resistance (UB406x178x67)		
Ref	Calculations	Remark
	Horizontal bearing resistance: $k_1 = \min\left(\frac{2.8e_{1,b}}{d_o} - 1.7; \frac{1.4p_1}{d_0} - 1.7; 2.5\right)$ $= \min\left(\frac{2.8 \times 114.7}{22} - 1.7; \frac{1.4 \times 60}{22} - 1.7; 2.5\right)$ $= 2.12$ $\alpha_b = \min\left(\frac{e_{2,b}}{3d_0}; \frac{p_2}{3d_0} - \frac{1}{4}; \frac{f_{ub}}{f_{u,b1}}; 1.0\right)$ $= \min\left(\frac{50}{3 \times 22}; \frac{800}{490}; 1.0\right)$ $= 0.76$ $F_{b,hor,Rd} = \frac{k_1 \alpha_b f_{u,b1} d t_{w,b1}}{\gamma_{M2}}$ $= \frac{2.12 \times 0.76 \times 490 \times 20 \times 8.8}{1.25} \times 10^{-3}$ $= 110.71kN$ **Bolt group bearing resistance:** $V_{Rd} = \frac{n}{\sqrt{\left(\frac{1+\alpha n}{F_{b,ver,Rd}}\right)^2 + \left(\frac{\beta n}{F_{b,hor,Rd}}\right)^2}}$ $= \frac{4}{\sqrt{\left(\frac{1}{113.68}\right)^2 + \left(\frac{0.5 \times 4}{110.71}\right)^2}} \times 10^{-3}$ $= 286.54kN > V_{Ed} = 200kN$	OK!

Check 2R – Fin plate resistance (UB406x178x67)		
Ref	Calculations	Remark
SS EN1993-1-8 SCI_P358	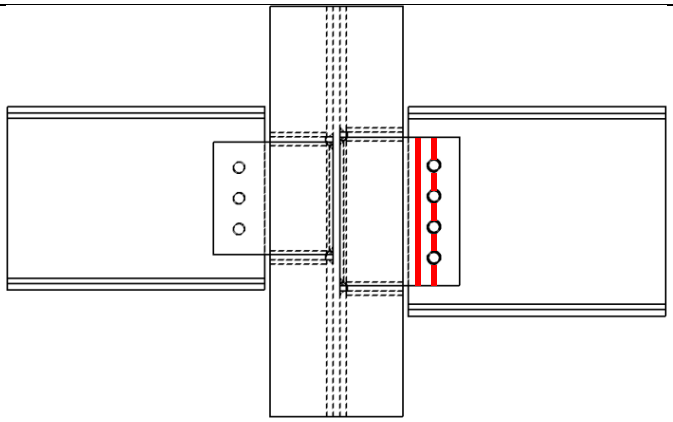 **Fin plate shear resistance (gross section):** $t_p = 10mm < 16mm$ $\therefore f_{y,p} = 355MPa$ Gross section shear resistance: $V_{Rd,g} = \frac{h_p t_p}{1.27} \frac{f_{y,p}}{\sqrt{3}\gamma_{M0}}$ $= \frac{290 \times 10}{1.27} \times \frac{355}{\sqrt{3}} \times 10^{-3}$ $= 468.02kN$ **Fin plate shear resistance (net section):** $A_{v,net} = t_p(h_p - n_1 d_0)$ $= 10 \times (290 - 4 \times 22)$ $= 2020mm^2$ Net area shear resistance: $V_{Rd,n} = \frac{A_{v,net} f_{u,p}}{\sqrt{3}\gamma_{M2}}$ $= 2020 \times \frac{490}{\sqrt{3} \times 1.25} \times 10^{-3}$ $= 457.17kN$	$h_p = 290mm$ $\gamma_{M0} = 1.0$ (SS EN1993-1-1)

Check 2R – Fin plate resistance (UB406x178x67)		
Ref	Calculations	Remark
	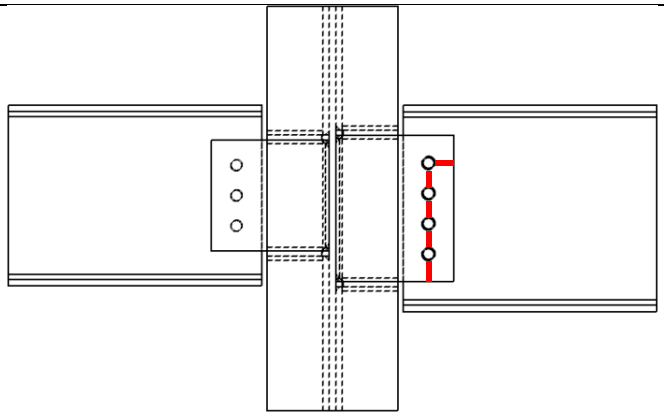 **Fin plate shear resistance (block shear):** For single vertical line of bolts ($n_2 = 1$): Net area subject to tension: $A_{nt} = t_p\left(e_2 - \frac{d_0}{2}\right)$ $= 10 \times (50 - \frac{22}{2})$ $= 390mm^2$ Net area subject to shear: $A_{nv} = t_p(h_p - e_1 - (n_1 - 0.5)d_0)$ $= 10 \times (290 - 55 - (4 - 0.5) \times 22)$ $= 1580mm^2$ $V_{Rd,b} = \left(\frac{0.5 f_{u,p} A_{nt}}{\gamma_{M2}} + \frac{f_{y,p}}{\sqrt{3}}\frac{A_{nv}}{\gamma_{M0}}\right)$ $= \left(\frac{0.5 \times 490 \times 390}{1.25} + \frac{355}{\sqrt{3}}\frac{1580}{1.0}\right) \times 10^{-3}$ $= 400.28kN$ $V_{Rd,min} = \min(V_{Rd,g}; V_{Rd,n}; V_{Rd,b})$ $= \min(468.02kN; 457.17kN; 400.28kN)$ $= 400.28kN > V_{Ed} = 200kN$	OK!

Check 2R – Fin plate resistance (UB406x178x67)		
Ref	Calculations	Remark
SCI_P358 SS EN1993-1-8	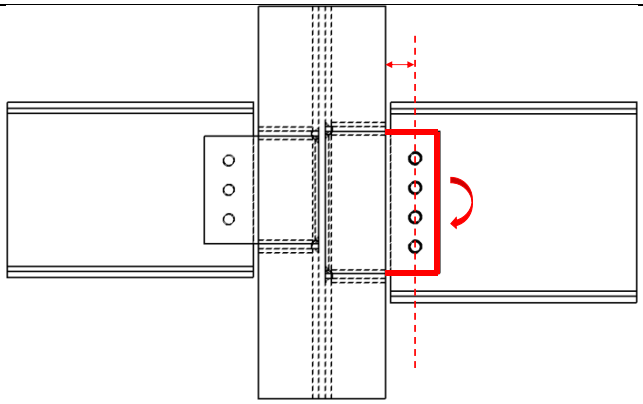 **Fin plate Bending:** $h_p = 290mm > 2.73z = 163.8mm$ $\therefore V_{Rd} = \infty$ **Lateral torsional buckling:** $z_p = 60mm < \frac{t_p}{0.15} = 66.67mm$ ∴The fin plate is classified as **Short fin plate** $W_{el,p} = \frac{t_p h_p^2}{6}$ $= \frac{10 \times 290^2}{6}$ $= 140166.7mm^3$ $V_{Rd} = \frac{W_{el,p}}{z}\frac{f_{y,p}}{\gamma_{M0}}$ $= \frac{140166.7 \times 355}{60 \times 1.0}$ $= 829.32kN > V_{Ed} = 200kN$	OK! OK!

Check 3R – Beam web resistance (UB406x178x67)		
Ref	Calculations	Remark
SCI_P358 SS EN1993-1-8	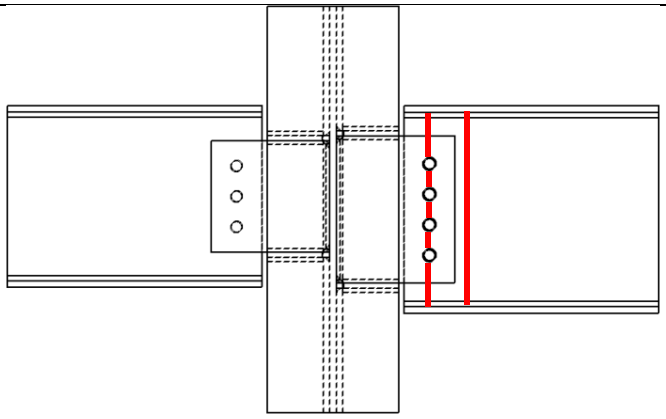 **Beam web shear resistance (gross section):** For unnotched beams (UB406x178x60): $A_V = A_g - 2b_{b1}t_{f,b1} + (t_{w,b1} + 2r_{b1})t_{f,b1}$ $= 8550 - 2 \times 178.8 \times 14.3 + (8.8 + 2 \times 10.2) \times 14.3$ $= 3853.88mm^2$ $V_{Rd,g} = V_{pl,Rd} = \frac{A_V f_{y,b1}}{\sqrt{3}\gamma_{M0}}$ $= 3853.88 \times \frac{355}{\sqrt{3} \times 1.0} \times 10^{-3}$ $= 789.89kN$ **Beam web shear resistance (net section):** $A_{V,net} = A_V - n_1 d_0 t_{w,b1}$ $= 3853.88 - 4 \times 22 \times 8.8$ $= 3079.48mm^2$ $V_{Rd,n} = \frac{A_{V,net} f_{u,b1}}{\sqrt{3}\gamma_{M2}}$ $= 3079.48 \times \frac{490}{\sqrt{3} \times 1.25} \times 10^{-3}$ $= 696.95kN$	

Check 3R – Beam web resistance (UB406x178x67)		
Ref	Calculations	Remark
	$V_{Rd,min} = \min(V_{Rd,g}; V_{Rd,n})$ $= \min(789.89kN; 696.95kN)$ $= 696.95kN > V_{Ed} = 200kN$ **Shear and bending interaction of secondary beam web:** For Short fin plate, shear and bending moment interaction check is NOT necessary	OK!

Check 4R – Welds (UB406x178x67)		
Ref	Calculations	Remark
SS EN1993-1-8	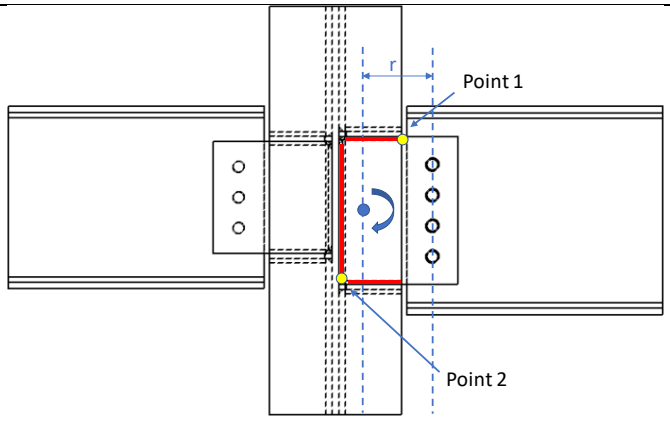 Location of centre of gravity of welds group: $\bar{x} = \frac{b^2}{(2b + d)}$ $= \frac{108^2}{(2 \times 108 + 260)}$ $= 18.57mm$ $\bar{y} = \frac{d}{2}$ $= \frac{260}{2}$ $= 130mm$ Unit throat area: $A_u = 2b + d$ $= 2 \times 108 + 260$ $= 476mm$ Moment arm between applied force and weld centre: $r = 164.43mm$ Induced moment on welds: $M = V_{Ed} \times r$ $= 200 \times 164.43$ $= 32886kNmm$	Length of the fillet welds: Horizontal length: $b = 108mm$ Depth: $d = 260mm$

Check 4R – Welds (UB406x178x67)		
Ref	Calculations	Remark
	Polar moment of inertia: $J = \frac{8b^3 + 6bd^2 + d^3}{12} - \frac{b^4}{2b + d}$ $= \frac{8 \times 108^3 + 6 \times 108 \times 260 + 260^3}{12} - \frac{108^4}{2 \times 108 + 260}$ $= 5669058mm^3$ **End-point 1:** Horizontal distance from centroid: $r_{zh} = b - \bar{x}$ $= 108 - 18.57$ $= 89.43mm$ Vertical distance from centroid: $r_{zv} = \bar{y} + cope\ hole\ size$ $= 130 + 15mm$ $= 145mm$ Vertical stress: $\tau_v = \frac{V_{Ed}}{2A_u} + \frac{Mr_{zh}}{2J}$ $= \frac{200}{2 \times 476} + \frac{32886 \times 89.43}{2 \times 5669058}$ $= 0.470kN/mm$ Horizontal stress: $\tau_h = \frac{Mr_{zv}}{2J}$ $= \frac{32886 \times 145}{2 \times 5669058}$ $= 0.421kN/mm$	

Check 4R – Welds (UB406x178x67)		
Ref	Calculations	Remark
	Resultant stress: $\tau_r = \sqrt{\tau_v^2 + \tau_h^2}$ $= \sqrt{0.470^2 + 0.421^2}$ $= 0.63 kN/mm$ **End-point 2:** Horizontal distance from centroid: $r_{zh} = \bar{x} + cope\ hole\ size$ $= 18.57 + 15mm = 33.57mm$ Vertical distance from centroid: $r_{zv} = d - \bar{y}$ $= 260 - 130$ $= 130mm$ Vertical stress: $\tau_v = \frac{V_{Ed}}{2A_u} + \frac{Mr_{zh}}{2J}$ $= \frac{200}{2 \times 476} + \frac{32886 \times 33.57}{2 \times 5669058}$ $= 0.307 kN/mm$ Horizontal stress: $\tau_h = \frac{Mr_{zv}}{2J}$ $= \frac{32886 \times 130}{2 \times 5669058}$ $= 0.377 kN/mm$ Resultant stress: $\tau_r = \sqrt{\tau_v^2 + \tau_h^2}$ $= \sqrt{0.307^2 + 0.377^2}$ $= 0.49 kN/mm$	

Check 4R – Welds (UB406x178x67)		
Ref	Calculations	Remark
SCI_P363	Choose fillet weld with 6mm leg length, 4.2mm throat thickness and grade S355 which match beam steel grade: Longitudinal resistance: $F_{w,L,Rd} = 1.01kN/mm$ Transverse resistance: $F_{w,T,Rd} = 1.24kN/mm$ **Simplified method:** $F_{w,L,Rd} = 1.24kN/mm > \tau_{Ed} = 0.63kN/mm$ **Directional method:** $SF = \left(\frac{\tau_{h,Ed}}{F_{w,L,Rd}}\right)^2 + \left(\frac{\tau_{v,Ed}}{F_{w,T,Rd}}\right)^2$ $= \left(\frac{0.47}{1.01}\right)^2 + \left(\frac{0.42}{1.24}\right)^2$ $= 0.33 < 1.00$	 OK! OK!

Check 5R – Local shear resistance of column web (UC254x254x107)		
Ref	Calculations	Remark
SCI_P358	Local shear resistance of the column (UC254x254x107) web: $A_v = h_p t_2$ $= 290 \times 12.8$ $= 3712mm^2$ $F_{Rd} = \frac{A_v f_{y,2}}{\sqrt{3}\gamma_{M0}}$ $= \frac{3712 \times 355}{\sqrt{3} \times 1.0} \times 10^{-3}$ $= 760.81kN > \frac{V_{Ed}}{2} = 100kN$	OK!

2.3.8 Example 6 – Fin plate connection to circular hollow column

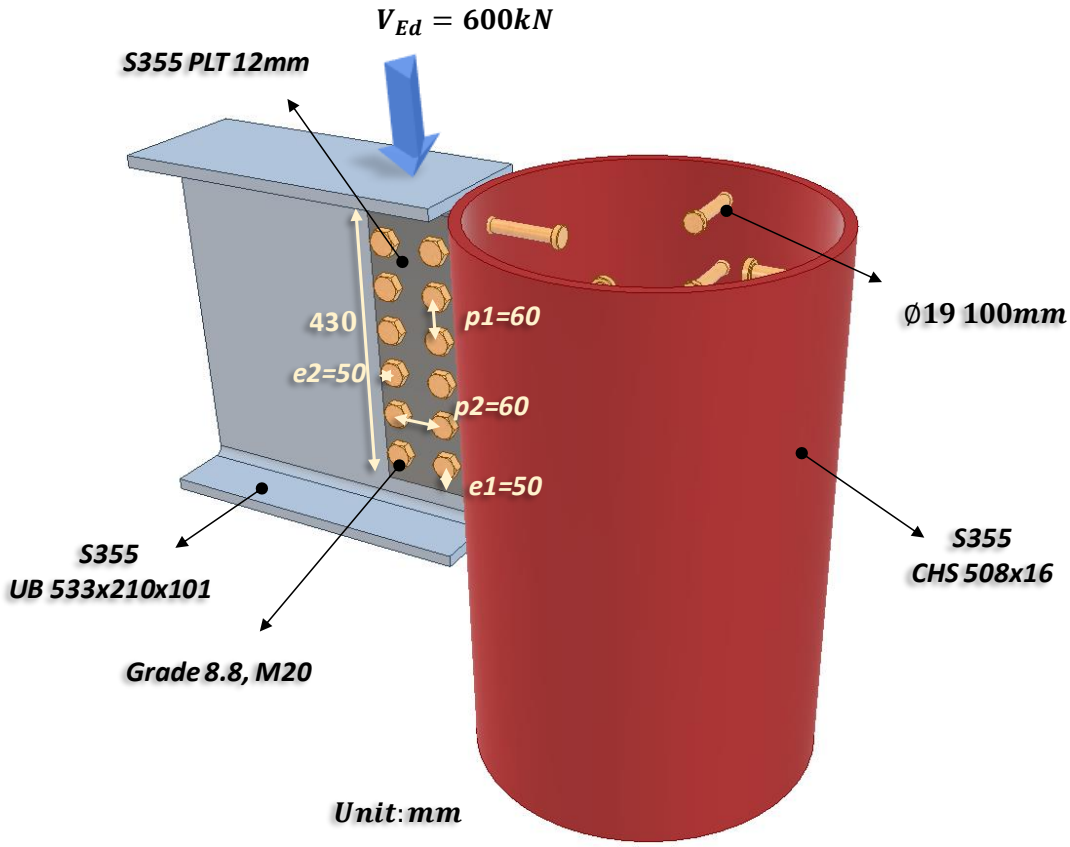

Check 1 – Bolt group resistance		
Ref	Calculations	Remark
	Bolt resistance: Using Gr8.8, M20 bolts with: $A_s = 245mm^2; f_{ub} = 800MPa;$ $\alpha_v = 0.6$ 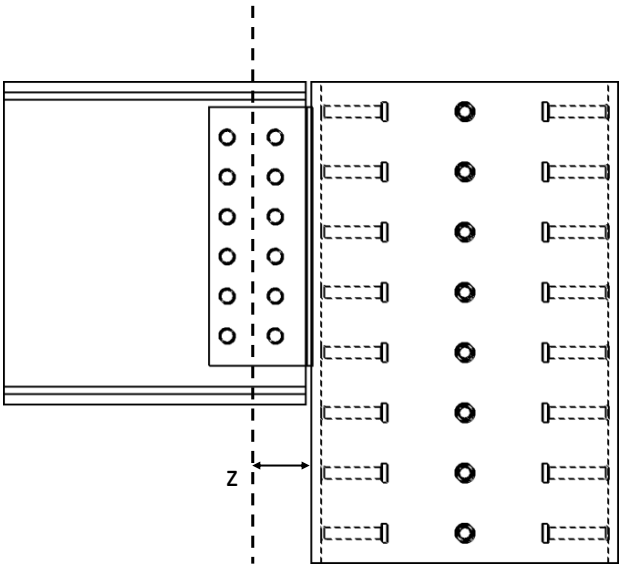 	
SS EN1993-1-8	Shear resistance of a single bolt: As the distance between the centres of the end fasters: $L_j = 330mm > 15d = 300mm$ ∴Reduction factor to cater long joints effect is applied $\beta_{Lj} = \left(1 - \frac{L_j - 15d}{200d}\right)$ $= \left(1 - \frac{330 - 15 \times 20}{200 \times 20}\right)$ $= 0.9925$ $F_{v,Rd} = \frac{\alpha_v f_{ub} A_s}{\gamma_{M2}} \beta_{Lj}$ $= \frac{0.6 \times 800 \times 245}{1.25} \times 0.9925 \times 10^{-3}$ $= 93.37kN$	$\gamma_{M2} = 1.25$ (refer to NA to SS) $z = 90mm$ $\boldsymbol{e_1 = 50.0mm}$ $(1.2d_0 < e_1 < 4t + 40mm)$ $\boldsymbol{p_1 = 66.0mm}$ $(2.2d_0 < p_1 < 14t\ or\ 200mm)$ $\boldsymbol{e_2 = 50.0mm}$ $(1.2d_0 < e_2 < 4t + 40mm)$ $\boldsymbol{p_2 = 60.0mm}$ $(2.4d_0 < p_2 < 14t\ or\ 200mm)$

Check 1 – Bolt group resistance		
Ref	Calculations	Remark
SN017	For two vertical lines of bolts ($n_2 = 2$): $l = \frac{n_1}{2}p_2^2 + \frac{1}{6}n_1(n_1^2 - 1)p_1^2$ $= \frac{6}{2}(60^2) + \frac{1}{6}(6)(6^2 - 1)(66^2)$ $= 163260mm^2$ $\alpha = \frac{zp_2}{2l}$ $= \frac{90 \times 60}{2 \times 163260}$ $= 0.0165$ $\beta = \frac{zp_1}{2l}(n_1 - 1)$ $= \frac{90 \times 66}{2 \times 163260}(6 - 1)$ $= 0.0910$ $n_1 = 6, n_2 = 2,\ n = 6 \times 2 = 12$ $V_{Rd} = \frac{nF_{V,Rd}}{\sqrt{(1 + \alpha n)^2 + (\beta n)^2}}$ $= \frac{12 \times 93.37 \times 10^{-3}}{\sqrt{(1 + 0.0165 \times 12)^2 + (0.0910 \times 12)^2}}$ $= 686.04kN > V_{Ed} = 600kN$	OK!
SCI_P358 SS EN1993-1-8	**Bolt bearing resistance in the fin plate:** For bearing resistance in vertical direction of one bolt: $k_1 = \min\left(\frac{2.8e_2}{d_o} - 1.7; \frac{1.4p_2}{d_0} - 1.7; 2.5\right)$ $= \min\left(\frac{2.8 \times 50}{22} - 1.7; \frac{1.4 \times 60}{22} - 1.7; 2.5\right)$ $= 2.12$	$t_p = 12mm$

Check 1 – Bolt group resistance		
Ref	Calculations	Remark
	$\alpha_b = \min\left(\frac{e_1}{3d_0}; \frac{p_1}{3d_0} - \frac{1}{4}; \frac{f_{ub}}{f_{u,p}}; 1.0\right)$ $= \min\left(\frac{50}{3 \times 22}; \frac{66}{3 \times 22} - \frac{1}{4}; \frac{800}{490}; 1.0\right)$ $= 0.75$ $F_{b,ver,Rd} = \frac{k_1 \alpha_b f_{u,p} d t_p}{\gamma_{M2}}$ $= \frac{2.12 \times 0.75 \times 490 \times 20 \times 12}{1.25} \times 10^{-3}$ $= 149.46kN$ For bearing resistance in horizontal direction of one bolt: $k_1 = \min\left(\frac{2.8e_1}{d_o} - 1.7; \frac{1.4p_1}{d_0} - 1.7; 2.5\right)$ $= \min\left(\frac{2.8 \times 50}{22} - 1.7; \frac{1.4 \times 66}{22} - 1.7; 2.5\right)$ $= 2.5$ $\alpha_b = \min\left(\frac{e_2}{3d_0}; \frac{p_2}{3d_0} - \frac{1}{4}; \frac{f_{ub}}{f_{u,p}}; 1.0\right)$ $= \min\left(\frac{50}{3 \times 22}; \frac{60}{3 \times 22} - \frac{1}{4}; \frac{800}{490}; 1.0\right)$ $= 0.66$ $F_{b,hor,Rd} = \frac{k_1 \alpha_b f_{u,p} d t_p}{\gamma_{M2}}$ $= \frac{2.5 \times 0.66 \times 490 \times 20 \times 12}{1.25} \times 10^{-3}$ $= 155.02\text{kN}$	

Check 1 – Bolt group resistance		
Ref	Calculations	Remark
	Bolt group bearing resistance: $V_{Rd} = \frac{n}{\sqrt{\left(\frac{1+\alpha n}{F_{b,ver,Rd}}\right)^2 + \left(\frac{\beta n}{F_{b,hor,Rd}}\right)^2}}$ $= \frac{12 \times 10^{-3}}{\sqrt{\left(\frac{1+0.0165 \times 12}{149.46}\right)^2 + \left(\frac{0.0910 \times 12}{155.02}\right)^2}}$ $= 1124.51kN > V_{Ed} = 600kN$	OK!
SCI_P358 SS EN1993-1-8	**Bolt bearing resistance in secondary beam web:** Vertical bearing resistance: $k_1 = \min\left(\frac{2.8e_{2,b}}{d_o} - 1.7; \frac{1.4p_2}{d_0} - 1.7; 2.5\right)$ $= \min\left(\frac{2.8 \times 50}{22} - 1.7; \frac{1.4 \times 60}{22} - 1.7; 2.5\right)$ $= 2.12$ $\alpha_b = \min\left(\frac{e_{1,b}}{3d_0}; \frac{p_1}{3d_0} - \frac{1}{4}; \frac{f_{ub}}{f_{u,b1}}; 1.0\right)$ $= \min\left(\frac{103.35}{3 \times 22}; \frac{66}{3 \times 22} - \frac{1}{4}; \frac{800}{490}; 1.0\right)$ $= 0.75$ $F_{b,ver,Rd} = \frac{k_1 \alpha_b f_{u,b1} d t_{w,b1}}{\gamma_{M2}}$ $= \frac{2.12 \times 0.75 \times 490 \times 20 \times 10.8}{1.25} \times 10^{-3}$ $= 134.51kN$ Horizontal bearing resistance: $k_1 = \min\left(\frac{2.8e_{1,b}}{d_o} - 1.7; \frac{1.4p_1}{d_0} - 1.7; 2.5\right)$ $= \min\left(\frac{2.8 \times 103.35}{22} - 1.7; \frac{1.4 \times 66}{22} - 1.7; 2.5\right)$ $= 2.5$	$\boldsymbol{e_{1,b} = 103.35mm}$ $\boldsymbol{e_{2,b} = 50.0mm}$

Check 1 – Bolt group resistance		
Ref	Calculations	Remark
	$\alpha_b = \min\left(\frac{e_{2,b}}{3d_0}; \frac{p_2}{3d_0} - \frac{1}{4}; \frac{f_{ub}}{f_{u,b1}}; 1.0\right)$ $= \min\left(\frac{50}{3 \times 22}; \frac{60}{3 \times 22} - \frac{1}{4}; \frac{800}{490}; 1.0\right)$ $= 0.66$ $F_{b,hor,Rd} = \frac{k_1 \alpha_b f_{u,b1} d t_{w,b1}}{\gamma_{M2}}$ $= \frac{2.5 \times 0.66 \times 490 \times 20 \times 10.8}{1.25} \times 10^{-3}$ $= 139.52kN$ **Bolt group bearing resistance:** $V_{Rd} = \frac{n}{\sqrt{\left(\frac{1 + \alpha n}{F_{b,ver,Rd}}\right)^2 + \left(\frac{\beta n}{F_{b,hor,Rd}}\right)^2}}$ $= \frac{12 \times 10^{-3}}{\sqrt{\left(\frac{1 + 0.0165 \times 12}{134.51}\right)^2 + \left(\frac{0.0910 \times 12}{139.52}\right)^2}}$ $= 1012.06kN > V_{Ed} = 600kN$	OK!

Check 2 – Fin plate resistance		
Ref	Calculations	Remark
SS EN1993-1-8 SCI_P358	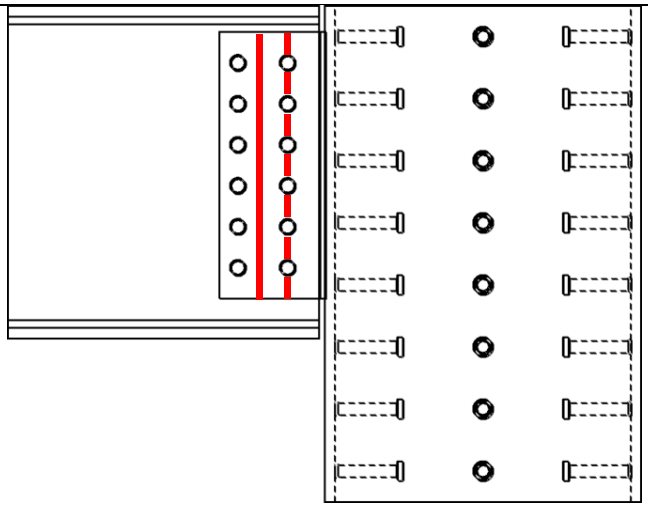 **Fin plate shear resistance (gross section):** $t_p = 12mm < 16mm$ $\therefore f_{y,p} = 355MPa$ Gross section shear resistance: $V_{Rd,g} = \frac{h_p t_p}{1.27} \frac{f_{y,p}}{\sqrt{3}\gamma_{M0}}$ $= \frac{430 \times 12}{1.27} \times \frac{355}{\sqrt{3}} \times 10^{-3}$ $= 832.75kN$ **Fin plate shear resistance (net section):** $A_{v,net} = t_p(h_p - n_1 d_0)$ $= 12 \times (430 - 6 \times 22)$ $= 3576mm^2$ Net area shear resistance: $V_{Rd,n} = \frac{A_{v,net} f_{u,p}}{\sqrt{3}\gamma_{M2}}$ $= 3576 \times \frac{490}{\sqrt{3} \times 1.25} \times 10^{-3}$ $= 809.32kN$	$h_p = 430mm$ $\gamma_{M0} = 1.0$ (SS EN1993-1-1)

Check 2 – Fin plate resistance		
Ref	Calculations	Remark
	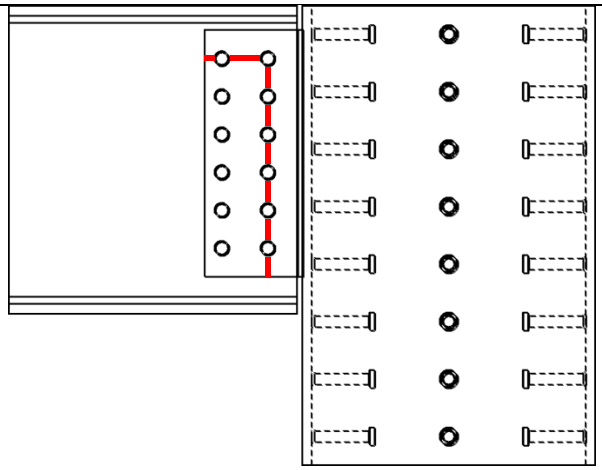	
	Fin plate shear resistance (block shear):	
	For single vertical line of bolts ($n_2 = 2$): Net area subject to tension: $A_{nt} = t_p\left(p_2 + e_2 - \frac{3d_0}{2}\right)$	
	$= 12 \times (60 + 50 - \frac{3 \times 22}{2})$	
	$= 924mm^2$	
	Net area subject to shear: $A_{nv} = t_p(h_p - e_1 - (n_1 - 0.5)d_0)$	
	$= 12 \times (430 - 50 - (6 - 0.5) \times 22)$	
	$= 3108mm^2$	
	$V_{Rd,b} = \left(\frac{0.5 f_{u,p} A_{nt}}{\gamma_{M2}} + \frac{f_{y,p}}{\sqrt{3}}\frac{A_{nv}}{\gamma_{M0}}\right)$	
	$= \left(\frac{0.5 \times 490 \times 924}{1.25} + \frac{355}{\sqrt{3}}\frac{3108}{1.0}\right) \times 10^{-3}$	
	$= 818.12kN$	
	$V_{Rd,min} = \min(V_{Rd,g}; V_{Rd,n}; V_{Rd,b})$	
	$= \min(832.75kN; 809.32kN; 818.12kN)$	
	$= 809.32kN > V_{Ed} = 600kN$	OK!

Check 2 – Fin plate resistance		
Ref	Calculations	Remark
SCI_P358 SS EN1993-1-8	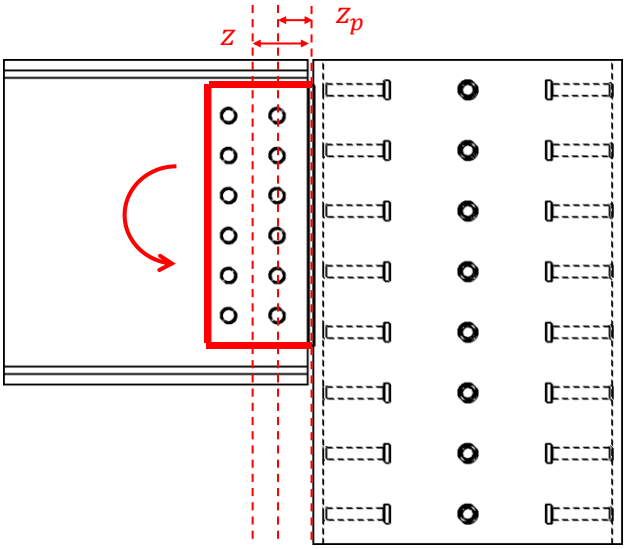 **Fin plate bending:** $h_p = 430mm > 2.73z = 245.7mm$ $\therefore V_{Rd} = \infty$	OK!
	Lateral torsional buckling: $z_p = 60mm < \frac{t_p}{0.15} = 80mm$ ∴The fin plate is classified as **Short fin plate** $W_{el,p} = \frac{t_p h_p^2}{6}$ $= \frac{12 \times 430^2}{6}$ $= 369800mm^3$ $V_{Rd} = \frac{W_{el,p}}{z}\frac{f_{y,p}}{\gamma_{M0}}$ $= \frac{369800 \times 355}{90 \times 1.0}$ $= 1458.66kN > V_{Ed} = 600kN$	OK!

Check 3 – Beam web resistance		
Ref	Calculations	Remark
SCI_P358 SS EN1993-1-8	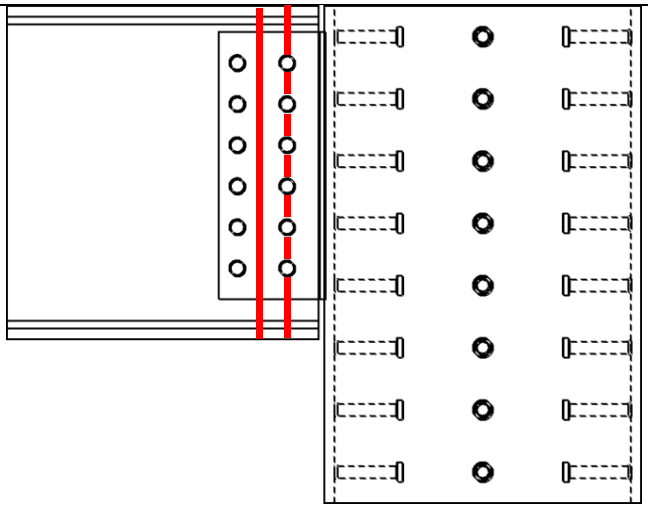 **Beam web shear resistance (gross section):** For unnotched beams (UB533x210x101): $A_V = A_g - 2b_{b1}t_{f,b1} + (t_{w,b1} + 2r_{b1})t_{f,b1}$ $= 12900 - 2 \times 210 \times 17.4 + (10.8 + 2 \times 12.7) \times 17.4$ $= 6221.88mm^2$ $V_{Rd,g} = V_{pl,Rd} = \frac{A_V f_{y,b1}}{\sqrt{3}\gamma_{M0}}$ $= 6221.88 \times \frac{355}{\sqrt{3} \times 1.0} \times 10^{-3}$ $= 1275.23kN$ **Beam web shear resistance (net section):** $A_{V,net} = A_V - n_1 d_0 t_{w,b1}$ $= 6221.88 - 6 \times 22 \times 10.8$ $= 4796.28mm^2$ $V_{Rd,n} = \frac{A_{V,net} f_{u,b1}}{\sqrt{3}\gamma_{M2}}$ $= 4796.28 \times \frac{490}{\sqrt{3} \times 1.25} \times 10^{-3}$ $= 1085.50kN$	

Check 3 – Beam web resistance		
Ref	Calculations	Remark
	$V_{Rd,min} = \min(V_{Rd,g}; V_{Rd,n})$ $= \min(1275.23kN; 1085.50kN)$ $= 1085.50kN > V_{Ed} = 600kN$ **Shear and bending interaction of secondary beam web:** For Short fin plate, shear and bending moment interaction check is not necessary	OK!

Check 4 - Welds		
Ref	Calculations	Remark
	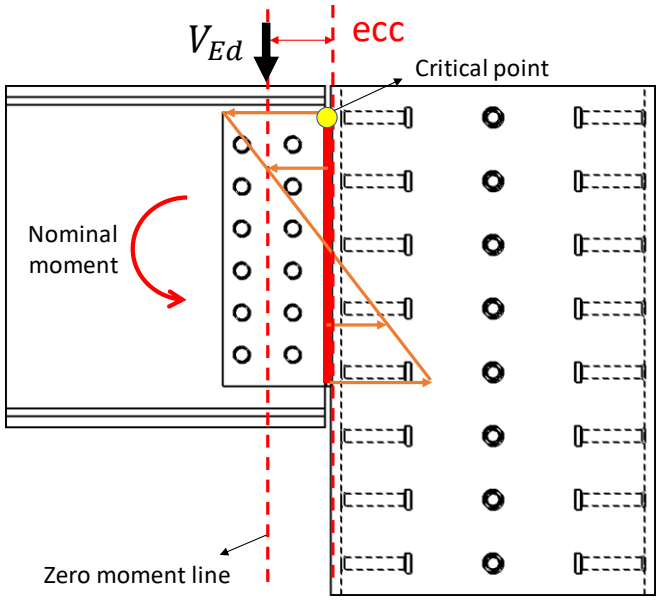	
SS EN1993-1-8	Unit throat area: $A_u = 2l = 2 \times 430$ $= 860mm^2$ Eccentricity between weld and line of action: $ecc = z = 90mm$ Nominal moment due to eccentricity: $M = V_{Ed}ecc$ $= 600 \times 90$ $= 54000kNmm$ Polar moment of inertia: $J = \frac{d^3}{12} = \frac{430^2}{12} = 6625583mm^3$ **Critical point:** Vertical stress: $\tau_{Ed} = \frac{V_{Ed}}{A_u}$ $= \frac{600}{860}$ $= 0.70kN/mm$	Length of the fillet welds: $l = 430mm$

Check 4 - Welds		
Ref	Calculations	Remark
	Transverse stress: $\tau_h = \frac{Mr_{zv}}{2J}$ $= \frac{54000 \times 215}{6625583 \times 2}$ $= 0.88N/mm$ Resultant stress: $\tau_r = \sqrt{\tau_v^2 + \tau_h^2}$ $= \sqrt{0.70^2 + 0.88^2}$ $= 1.12kN/mm$ Choose fillet weld with 8mm leg length, 5.6mm throat thickness and grade S355 which match beam steel grade: Longitudinal resistance: $F_{w,L,Rd} = 1.35kN/mm$ Transverse resistance: $F_{w,T,Rd} = 1.65kN/mm$	
	Simplified method: $F_{w,L,Rd} = 1.35kN/mm > \tau_{Ed} = 1.12kN/mm$	OK!
	Directional method: $SF = \left(\frac{\tau_{v,Ed}}{F_{w,L,Rd}}\right)^2 + \left(\frac{\tau_{h,Ed}}{F_{w,T,Rd}}\right)^2$ $= \left(\frac{0.70}{1.35}\right)^2 + \left(\frac{0.88}{1.65}\right)^2$ $= 0.55 < 1.00$	OK!

Check 5 – Local resistance of the column		
Ref	Calculations	Remark
SCI_P358	Shear area: $A_v = h_p t_2$ $= 430 \times 16$ $= 6880mm^2$ Shear resistance: $F_{Rd} = \frac{A_v f_{y,2}}{\sqrt{3}\gamma_{M0}}$ $= \frac{6880 \times 355}{\sqrt{3}} \times 10^{-3}$ $= 1410.12kN > V_{Ed} = 600kN$	OK!
SS EN1993-1-8	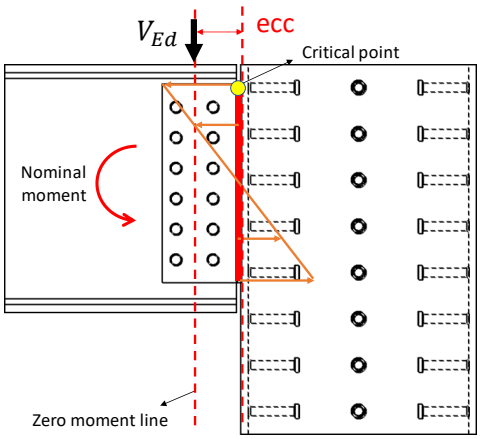	
Table 7.3	Tying resistance: $N_{Rd} = \frac{5 f_{u,2} t_2^2 (1 + 0.25\eta) \times 0.67}{\gamma_{Mu}}$ $= \frac{5 \times 355 \times 16^2 \left(1 + 0.25 \times \left(\frac{430/2}{508}\right)\right) \times 0.67}{1.1}$ $= 306.06kN$ As only half of the fin plate in tension: $\eta = \frac{h}{2}/d_0$ $V_{Rd} = \frac{F_{Rd}\left(\frac{2}{3}h\right)}{ecc} = 306.06 \times \frac{\frac{2}{3} \times 430}{90}$ $= 974.84kN > V_{Ed} = 600kN$	OK!

Check 6 – Column shear resistance		
Ref	Calculations	Remark
SS EN1994	The reaction force from the beam is transferred to the composite column via the steel tube. The force acting on the concrete may be assumed to be proportional to the cross section axial resistance: $N_{cs,Ed} = N_{Ed}\left(1 - \frac{N_{a,Rd}}{N_{pl,Rd}}\right)$ $= 600(1 - \frac{8770}{14703.66})$ $= 242.13kN$	$N_{a,Rd}$: Steel section axial resistance $N_{pl,Rd}$: Axial resistance of composite column
	The longitudinal shear stress at the surface of the steel section: $\tau_{Ed} = \frac{N_{cs,Ed}}{u_a l_v}$ $= \frac{242.13 \times 10^3}{1495.4 \times 952}$ $= 0.17MPa$	u_a: Perimeter of the section $u_a = \pi(D - 2t)$ $= \pi \times (508 - 32)$ $= 1495.4mm$ l_v:Load introduction length (According to EC4, the introduction length should not exceed 2d or L/3, where d is the minimum transverse dimension of the column and L is the column length) Assume: $l_v = 2(D - 2t)$ $= 2(508 - 32)$ $= 952mm$
	For Concrete-filled circular sections, the bond resistance is: $\tau_{Rd} = 0.55MPa > \tau_{Ed} = 0.17MPa$	OK!

Note: As the shear capacity between steel and concrete is sufficient, shear stud may not be needed in this case

Check 6a (For info) – Shear stud capacity		
Ref	Calculations	Remark
SS EN1994	Note: A conservative assumption is to assume that the bond is not effective in transferring the beam force to the concrete. The force acting on the concrete is designed to be resisted by shear studs. Shear capacity of shear stud: For h/d = 5.26 > 4, $\alpha = 1.0$ $P_{Rd} = \min\left(\frac{0.8 f_u \left(\frac{\pi d^2}{4}\right)}{\gamma_{Mv}}; \frac{0.29 \alpha d^2 (F_{ck} E_{cm})^{\frac{1}{2}}}{\gamma_{Mv}}\right)$ $= \min\left(\frac{0.8 \times 450 \times \left(\frac{\pi 19^2}{4}\right)}{1.25} \times 10^{-3};\right.$ $\left.\frac{0.29 \times 1.0 \times 19^2 \times (50 \times 37000)^{\frac{1}{2}}}{1.25} \times 10^{-3}\right)$ $= 81.66kN$ Total resistance: $V_{Rd} = nP_{Rd} + 2R$ ∴ Number of shear studs required assuming zero bond resistance: $n = \frac{N_{cs,Ed}}{P_{Rd}} = \frac{242.13}{81.66} = 3\ (Use\ 4\ studs)$	d: diameter of the shank of the stud $d = 19mm$ f_{ck}: characteristic cylinder strength of the concrete $f_{ck} = 50MPa$ f_u: ultimate strength of the stud $f_u = 450MPa$ h: overall height of the stud $h = 100mm$ E_{cm}: Secant modulus of the concrete $E_{cm} = 37000MPa$ γ_{Mv}: partial safety factor =1.25 R should not be considered in this case as it is applicable to concrete encased section SS EN1994-1-1, 6.7.4.2(4).

2.3.9 Example 7 – Beam-to-Beam connection

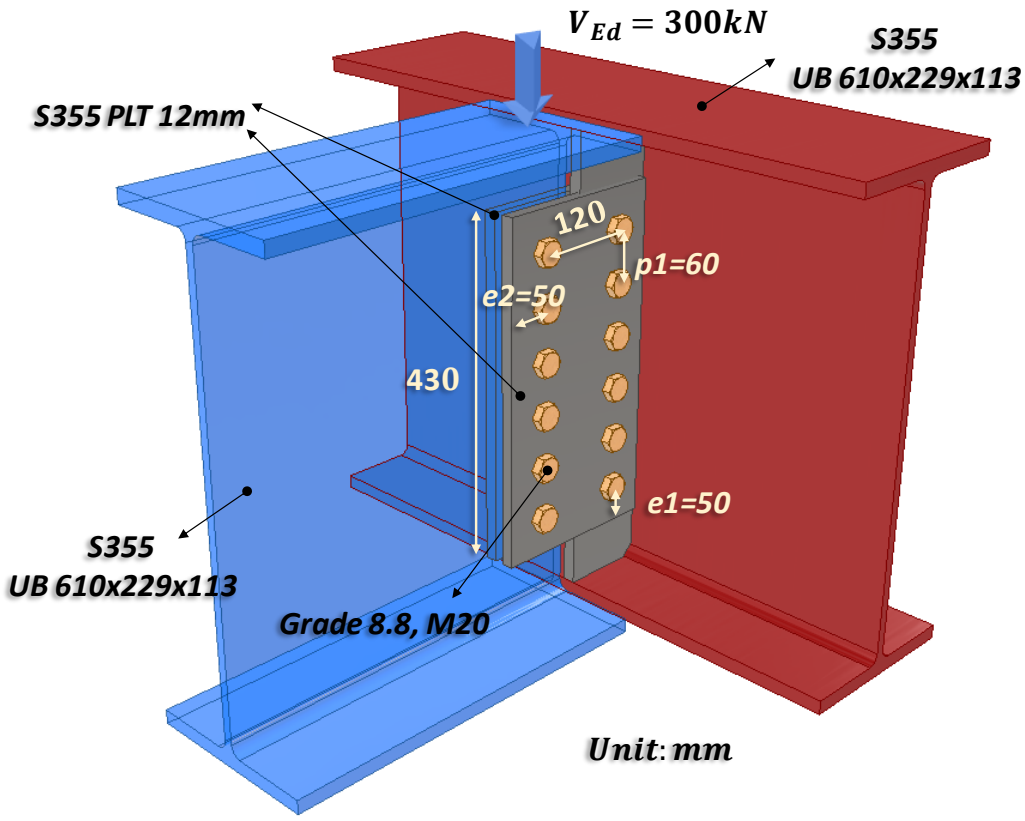

Check 1 – Bolt group resistance		
Ref	Calculations	Remark
	Bolt shear resistance: Using Gr8.8, M20 bolts with: $A_s = 245mm^2$, $f_{ub} = 800MPa$, $\alpha_v = 0.6$ 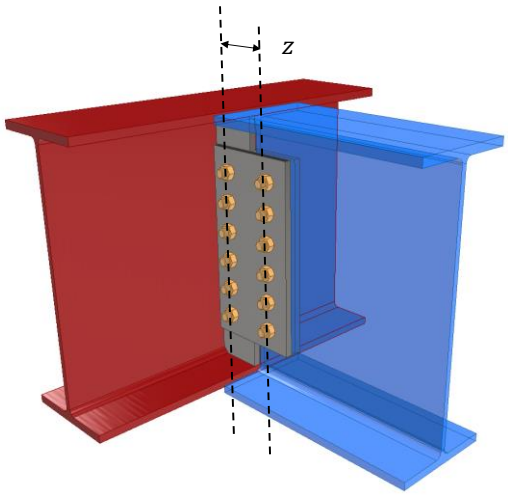 	
SS EN1993-1-8	Shear resistance of a bolt: As the distance between the centers of the end fasters: $L_j = 330mm > 15d = 300mm$ ∴Reduction factor to cater long joints effect is applied $\beta_{Lj} = \left(1 - \frac{L_j - 15d}{200d}\right)$ $= \left(1 - \frac{330 - 15 \times 20}{200 \times 20}\right)$ $= 0.9925$ $F_{v,Rd} = \frac{\alpha_v f_{ub} A_s}{\gamma_{M2}} \beta_{Lj}$ $= \frac{0.6 \times 800 \times 245}{1.25} \times 0.9925 \times 10^{-3}$ $= 93.37kN$	$\gamma_{M2} = 1.25$ (refer to NA to SS)

Check 1 – Bolt group resistance		
Ref	Calculations	Remark
SCI_P358 SN017	For single vertical line of bolts ($n_2 = 1$): $n_1 = 6, n = 6 \times 1 = 6$ $\alpha = 0$ $\beta = \frac{6z}{n_1(n_1+1)p_1}$ $= \frac{6 \times 120mm}{6 \times (6+1) \times 66mm}$ $= 0.26$ $V_{Rd} = \frac{nF_{V,Rd}}{\sqrt{(1+\alpha n)^2 + (\beta n)^2}}$ $= \frac{6 \times 93.37}{\sqrt{(1+0)^2 + (0.26 \times 6)^2}} \times 10^{-3}$ $= 300.29kN > \frac{V_{Ed}}{2} = 150kN$	$z = 120mm$ OK!
SCI_P358 SS EN1993-1-8	**Bolt bearing resistance in the gusset plate:** For bearing resistance in vertical direction of one bolt: $k_1 = \min\left(\frac{2.8e_2}{d_o} - 1.7; \frac{1.4p_2}{d_0} - 1.7; 2.5\right)$ $= \min\left(\frac{2.8 \times 50}{22} - 1.7; 2.5\right)$ $= 2.5$ $\alpha_b = \min\left(\frac{e_1}{3d_0}; \frac{p_1}{3d_0} - \frac{1}{4}; \frac{f_{ub}}{f_{u,p}}; 1.0\right)$ $= \min\left(\frac{50}{3 \times 22}; \frac{66}{3 \times 22} - \frac{1}{4}; \frac{800}{490}; 1.0\right)$ $= 0.75$	$\boldsymbol{e_1 = 50.0mm}$ $(1.2d_0 < e_1 < 4t + 40mm)$ $\boldsymbol{p_1 = 66.0mm}$ $(2.2d_0 < p_1 < 14t\ or\ 200mm)$ $\boldsymbol{e_2 = 50.0mm}$ $(1.2d_0 < e_2 < 4t + 40mm)$ $\boldsymbol{p_2 = nil}$ $(2.4d_0 < p_2 < 14t\ or\ 200mm)$

Check 1 – Bolt group resistance		
Ref	Calculations	Remark
	$F_{b,ver,Rd} = \frac{k_1 \alpha_b f_{u,p} d t_p}{\gamma_{M2}}$ $= \frac{2.5 \times 0.75 \times 490 \times 20 \times 12}{1.25} \times 10^{-3}$ $= 176.40kN$ For bearing resistance in horizontal direction of one bolt: $k_1 = \min\left(\frac{2.8e_1}{d_o} - 1.7; \frac{1.4p_1}{d_0} - 1.7; 2.5\right)$ $= \min\left(\frac{2.8 \times 50}{22} - 1.7; \frac{1.4 \times 66}{22} - 1.7; 2.5\right)$ $= 2.5$ $\alpha_b = \min\left(\frac{e_2}{3d_0}; \frac{p_2}{3d_0} - \frac{1}{4}; \frac{f_{ub}}{f_{u,p}}; 1.0\right)$ $= \min\left(\frac{50}{3 \times 22}; \frac{800}{490}; 1.0\right)$ $= 0.76$ $F_{b,hor,Rd} = \frac{k_1 \alpha_b f_{u,p} d t_p}{\gamma_{M2}}$ $= \frac{2.44 \times 0.76 \times 490 \times 20 \times 12}{1.25} \times 10^{-3}$ $= 178.18\text{kN}$ **Bolt group bearing resistance:** $V_{Rd} = \frac{n}{\sqrt{\left(\frac{1+\alpha n}{F_{b,ver,Rd}}\right)^2 + \left(\frac{\beta n}{F_{b,hor,Rd}}\right)^2}}$ $= \frac{6}{\sqrt{\left(\frac{1}{176.40}\right)^2 + \left(\frac{0.26 \times 6}{178.18}\right)^2}} \times 10^{-3}$ $= 575.66kN > \frac{V_{Ed}}{2} = 150kN$	OK!

Check 1 – Bolt group resistance		
Ref	Calculations	Remark
SCI_P358 SS EN1993-1-8	**Bolt bearing resistance in secondary beam web:** Vertical bearing resistance: $k_1 = \min\left(\frac{2.8e_{2,b}}{d_o} - 1.7; \frac{1.4p_2}{d_0} - 1.7; 2.5\right)$ $= \min\left(\frac{2.8 \times 50}{22} - 1.7; 2.5\right)$ $= 2.5$ $\alpha_b = \min\left(\frac{e_{1,b}}{3d_0}; \frac{p_1}{3d_0} - \frac{1}{4}; \frac{f_{ub}}{f_{u,b1}}; 1.0\right)$ $= \min\left(\frac{138.8}{3 \times 22}; \frac{66}{3 \times 22} - \frac{1}{4}; \frac{800}{490}; 1.0\right)$ $= 0.75$ $F_{b,ver,Rd} = \frac{k_1 \alpha_b f_{u,b1} d t_{w,b1}}{\gamma_{M2}}$ $= \frac{2.5 \times 0.75 \times 490 \times 20 \times 11.1}{1.25} \times 10^{-3}$ $= 163.17kN$ Horizontal bearing resistance: $k_1 = \min\left(\frac{2.8e_{1,b}}{d_o} - 1.7; \frac{1.4p_1}{d_0} - 1.7; 2.5\right)$ $= \min\left(\frac{2.8 \times 138.8}{22} - 1.7; \frac{1.4 \times 66}{22} - 1.7; 2.5\right)$ $= 2.5$ $\alpha_b = \min\left(\frac{e_{2,b}}{3d_0}; \frac{p_2}{3d_0} - \frac{1}{4}; \frac{f_{ub}}{f_{u,b1}}; 1.0\right)$ $= \min\left(\frac{50}{3 \times 22}; \frac{800}{490}; 1.0\right)$ $= 0.76$	$\boldsymbol{e_{1,b} = 138.8mm}$ $\boldsymbol{e_{2,b} = 50.0mm}$ $t_{w,b1} = \boldsymbol{11.1mm}$

Check 1 – Bolt group resistance		
Ref	Calculations	Remark
	$F_{b,hor,Rd} = \frac{k_1 \alpha_b f_{u,b1} d t_{w,b1}}{\gamma_{M2}}$ $= \frac{2.5 \times 0.76 \times 490 \times 20 \times 11.1}{1.25} \times 10^{-3}$ $= 164.82kN$ **Bolt group bearing resistance:** $V_{Rd} = \frac{n}{\sqrt{\left(\frac{1+\alpha n}{F_{b,ver,Rd}}\right)^2 + \left(\frac{\beta n}{F_{b,hor,Rd}}\right)^2}}$ $= \frac{6}{\sqrt{\left(\frac{1}{163.17}\right)^2 + \left(\frac{0.26 \times 6}{164.82}\right)^2}} \times 10^{-3}$ $= 532.48kN > V_{Ed} = 300kN$	OK!

Check 1a – Bolt group resistance (Nominal moment + shear)		
Ref	Calculations	Remark
SS EN1993	Nominal moment: $M = V_{Ed} ecc$ $= 300 \times 120$ $= 36000kNmm$ Force on bolt due to moment: $F_{Ed,m} = \frac{Mr}{2\sum y^2}$ $= 36000 \times \frac{165}{2 \times 76230} = 38.96kN$ Force due to vertical shear: $F_{Ed,s} = \frac{V_{Ed}}{2n} = \frac{300}{2 \times 6} = 25kN$ Resultant force on bolt: $F_{Ed,result} = \sqrt{F_{Ed,m}^2 + F_{Ed,s}^2} = \sqrt{38.96^2 + 25^2}$ $= 46.29kN < F_{v,Rd} = 93.37kN$	$ecc = z = 120mm$ $\sum y^2 = 76230mm^2$ Furthest distance between bolt and centroid: $r = 165mm$ OK!

Check 2 – Gusset plate resistance		
Ref	Calculations	Remark
SS EN1993-1-8 SCI_P358	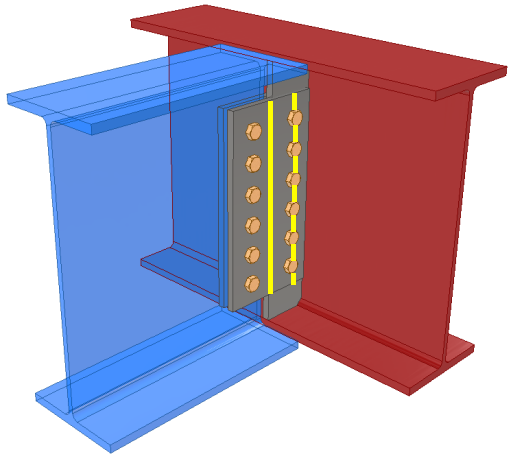 **Gusset plate shear resistance (gross section):** $t_p = 11mm < 16mm$ $\therefore f_{y,p} = 355MPa$ Gross section shear resistance: $V_{Rd,g} = \frac{h_p t_p}{1.27} \frac{f_{y,p}}{\sqrt{3}\gamma_{M0}}$ $= \frac{430 \times 12}{1.27} \times \frac{355}{\sqrt{3}} \times 10^{-3}$ $= 832.75kN$ **Gusset plate shear resistance (net section):** $A_{v,net} = t_p(h_p - n_1 d_0)$ $= 12 \times (430 - 6 \times 22)$ $= 3576mm^2$ Net area shear resistance: $V_{Rd,n} = \frac{A_{v,net} f_{u,p}}{\sqrt{3}\gamma_{M2}}$ $= 3576 \times \frac{490}{\sqrt{3} \times 1.25} \times 10^{-3}$ $= 809.32kN$	$h_p = 500mm$ $\gamma_{M0} = 1.0$ (SS EN1993-1-1)

Check 2 – Gusset plate resistance		
Ref	Calculations	Remark
	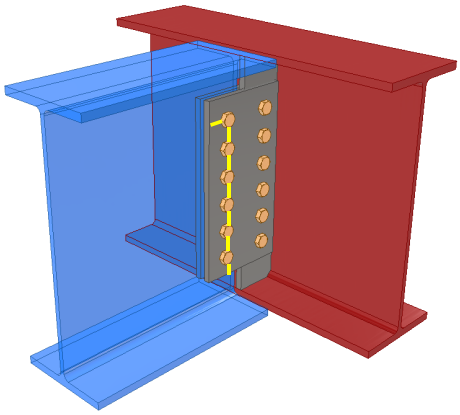 **Gusset plate shear resistance (block shear):** For single vertical line of bolts ($n_2 = 1$): Net area subject to tension: $A_{nt} = t_p\left(e_2 - \frac{d_0}{2}\right)$ $= 12 \times (50 - \frac{22}{2})$ $= 468mm^2$ Net area subject to shear: $A_{nv} = t_p(h_p - e_1 - (n_1 - 0.5)d_0)$ $= 12 \times (430 - 50 - (6 - 0.5) \times 22)$ $= 3108mm^2$ $V_{Rd,b} = \left(\frac{0.5 f_{u,p} A_{nt}}{\gamma_{M2}} + \frac{f_{y,p}}{\sqrt{3}}\frac{A_{nv}}{\gamma_{M0}}\right)$ $= \left(\frac{0.5 \times 490 \times 468}{1.25} + \frac{355}{\sqrt{3}}\frac{3108}{1.0}\right) \times 10^{-3}$ $= 728.74kN$ $V_{Rd,min} = \min(V_{Rd,g}; V_{Rd,n}; V_{Rd,b})$ $= \min(832.75kN; 809.32kN; 728.74kN)$ $= 728.74kN > \frac{V_{Ed}}{2} = 150kN$	OK!

Check 2 – Gusset plate resistance		
Ref	Calculations	Remark
SCI_P358 SS EN1993-1-8	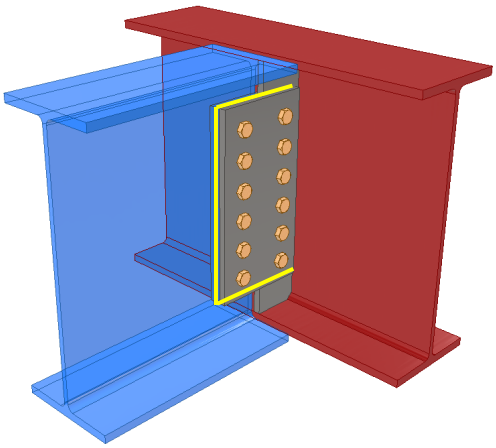 **Gusset plate bending:** $h_p = 430mm > 2.73z = 327.6mm$ $\therefore V_{Rd} = \infty$ **Lateral torsional buckling:** $z_p = 120mm > \frac{t_p}{0.15} = 80mm$ ∴The fin plate is classified as **Long fin plate** Raidus of gyration: $i = \frac{t_p}{\sqrt{12}} = \frac{12}{\sqrt{12}} = 3.46$ Slenderness of the fin plate: $\overline{\lambda_{LT}} = \frac{L_{cr}}{\pi i}\sqrt{\frac{f_y}{E}}$ $= \frac{120}{\pi \times 3.46}\left(\frac{355}{210000}\right)^{\frac{1}{2}}$ $= 0.454$ LTB reduction factor: $\therefore \chi_{LT} = 0.87$	OK!

Check 2 – Gusset plate resistance		
Ref	Calculations	Remark
	$W_{el,p} = \frac{t_p h_p^2}{6}$ $= \frac{12 \times 430^2}{6}$ $= 369800 mm^3$ $V_{Rd} = \min\left(\frac{W_{el,p}}{z}\frac{\chi_{LT} f_{y,p}}{0.6\gamma_{M1}}; \frac{W_{el,p}}{z}\frac{f_{y,p}}{\gamma_{M0}}\right)$ $= \min\left(\frac{369800 \times 0.87 \times 355}{120 \times 0.6 \times 1.0}; \frac{369800 \times 355}{120 \times 1.0}\right) \times 10^{-3}$ $= 1093.99 kN > \frac{V_{Ed}}{2} = 150 kN$	OK!

Note:

Lateral restraint should be provided for primary beam with long fin plate to prevent lateral torsional buckling.

Check 3 – Secondary beam web resistance		
Ref	Calculations	Remark
SCI_P358 SS EN1993-1-8	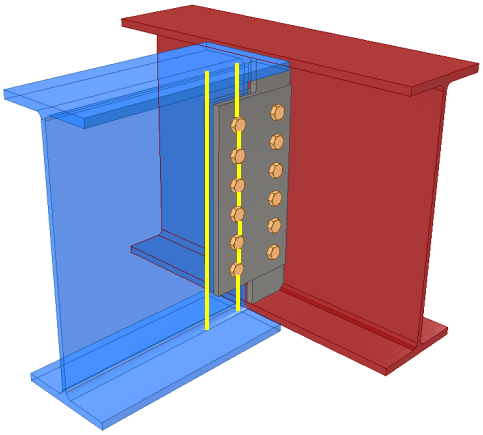 **Beam web shear resistance (gross section):** For unnotched beams (UB610x229x113): $A_V = A_g - 2b_{b1}t_{f,b1} + (t_{w,b1} + 2r_{b1})t_{f,b1}$ $= 14400 - 2 \times 228.2 \times 17.3 + (11.1 + 2 \times 12.7) \times 17.3$ $= 7135.73mm^2$ $V_{Rd,g} = V_{pl,Rd} = \frac{A_V f_{y,b1}}{\sqrt{3}\gamma_{M0}}$ $= 7135.73 \times \frac{355}{\sqrt{3} \times 1.0} \times 10^{-3}$ $= 1462.53kN$ **Beam web shear resistance (net section):** $A_{V,net} = A_V - n_1 d_0 t_{w,b1}$ $= 7135.73 - 6 \times 22 \times 11.1$ $= 5670.53mm^2$ $V_{Rd,n} = \frac{A_{V,net} f_{u,b1}}{\sqrt{3}\gamma_{M2}}$ $= 5670.53 \times \frac{490}{\sqrt{3} \times 1.25} \times 10^{-3}$ $= 1283.36kN$	

Check 3 – Secondary beam web resistance		
Ref	Calculations	Remark
	$V_{Rd,min} = \min(V_{Rd,g}; V_{Rd,n})$ $= \min(1462.53kN; 1283.36kN)$ $= 1283.36kN > V_{Ed} = 300kN$ 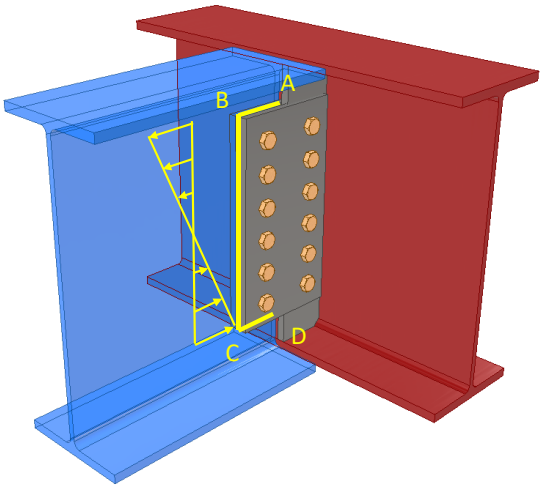 **Shear and bending interaction of secondary beam web:** For long fin plate, shear and bending moment interaction check is necessary For single vertical line of bolts ($n_2 = 1$): $V_{pl,AB,Rd} = \frac{t_{w,b1} e_{2,b} \times f_{y,b1}}{\sqrt{3}\gamma_{M0}}$ $= \frac{11.1 \times 50 \times 355}{\sqrt{3} \times 1.0} \times 10^{-3}$ $= 113.75kN$ $V_{BC,Ed} = \frac{V_{Ed}(n_1 - 1)p_1}{h_{b1}}$ $= 300 \times (6 - 1) \times \frac{66}{607.6} \times 10^{-3}$ $= 162.94kN$	OK!

Check 3 – Secondary beam web resistance		
Ref	Calculations	Remark
	$V_{pl,BC,Rd} = \frac{t_{w,b1}(n_1 - 1)P_1 \times f_{y,b1}}{\sqrt{3}\gamma_{M0}}$ $= 11.1 \times (6 - 1) \times 66 \times \frac{355}{\sqrt{3}} \times 10^{-3}$ $= 581.58kN$ $V_{BC,Ed} < \frac{V_{pl,BC,Rd}}{2}$ $\therefore Low\ shear$ $M_{c,BC,Rd} = \frac{f_{y,b1}t_{w,b1}}{6\gamma_{M0}}\left((n_1 - 1)p_1\right)^2$ $= 355 \times \frac{11.1}{6} \times \left((6 - 1) \times 66\right)^2 \times 10^{-6}$ $= 71.52kNm$ For a single vertical line of bolts ($n_2 = 1$): $V_{Rd} = \frac{M_{c,BC,Rd} + V_{pl,AB,Rd}(n_1 - 1)p_1}{z_p}$ $= \frac{71.52 + 113.75 \times (6 - 1) \times 66}{120}$ $= 313.42kN > V_{Ed} = 300kN$	OK!

Check 4 – Welds (C shaped fillet weld)		
Ref	Calculations	Remark
	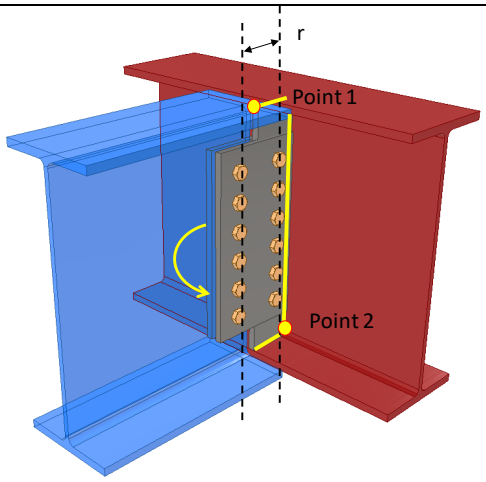	
SS EN1993-1-8	Location of centre of gravity of welds group: $\bar{x} = \frac{b^2}{(2b + d)}$ $= \frac{64.1^2}{(2 \times 64.1 + 543)}$ $= 3.57mm$ $\bar{y} = \frac{d}{2}$ $= \frac{543}{2}$ $= 271.50mm$ Unit throat area: $A_u = 2b + d$ $= 2 \times 64.1 + 543$ $= 671.2mm$ Moment arm between applied force and weld center: $r = 175mm$ Induced moment on welds: $M = V_{Ed} \times r$ $= 300 \times 175$ $= 52500kNmm$	Length of the fillet welds: Horizontal length: $b = 64.1mm$ Depth: $d = 543mm$

Check 4 – Welds (C shaped fillet weld)		
Ref	Calculations	Remark
	Polar moment of inertia: $J = \frac{8b^3 + 6bd^2 + d^3}{12} - \frac{b^4}{2b + d}$ $= \frac{8 \times 64.1^3 + 6 \times 64.1 \times 543 + 543^3}{12} - \frac{64.1^4}{2 \times 64.1 + 543}$ $= 22942258mm^3$ **End-point 1:** Horizontal distance from centroid: $r_{zh} = b - \bar{x}$ $= 64.1 - 3.57$ $= 60.53mm$ Vertical distance from centroid: $r_{zv} = \bar{y} + cope\ hole\ size$ $= 271.50 + 15mm$ $= 286.50mm$ Vertical stress: $\tau_v = \frac{V_{Ed}}{2A_u} + \frac{Mr_{zh}}{2J}$ $= \frac{300}{2 \times 671.2} + \frac{52500 \times 60.53}{2 \times 22942258}$ $= 0.293kN/mm$ Horizontal stress: $\tau_h = \frac{Mr_{zv}}{2J}$ $= \frac{52500 \times 286.50}{2 \times 22942258}$ $= 0.328kN/mm$ Resultant stress: $\tau_r = \sqrt{\tau_v^2 + \tau_h^2}$ $= \sqrt{0.293^2 + 0.328^2}$ $= 0.44kN/mm$	

Check 4 – Welds (C shaped fillet weld)		
Ref	Calculations	Remark
	End-point 2: Horizontal distance from centroid: $r_{zh} = \bar{x} + cope\ hole\ size$ $= 3.57 + 15mm = 18.57mm$ Vertical distance from centroid: $r_{zv} = d - \bar{y}$ $= 543 - 271.50$ $= 286.50mm$ Vertical stress: $\tau_v = \frac{V_{Ed}}{A_u} + \frac{Mr_{zh}}{J}$ $= \frac{300}{2 \times 671.2} + \frac{52500 \times 18.57}{2 \times 22942258}$ $= 0.245kN/mm$ Horizontal stress: $\tau_h = \frac{Mr_{zv}}{2J}$ $= \frac{52500 \times 271.50}{2 \times 22942258}$ $= 0.311kN/mm$ Resultant stress: $\tau_r = \sqrt{\tau_v^2 + \tau_h^2}$ $= \sqrt{0.245^2 + 0.311^2}$ $= 0.40kN/mm$ Choose fillet weld with 5mm leg length, 3.5mm throat thickness and grade S355 which match beam steel grade: Longitudinal resistance: $F_{w,L,Rd} = 0.84kN/mm$ Transverse resistance: $F_{w,T,Rd} = 1.03kN/mm$ **Simplified method:** $F_{w,L,Rd} = 0.84kN/mm > \tau_{Ed} = 0.44kN/mm$	OK!

Check 4 – Welds (C shaped fillet weld)		
Ref	Calculations	Remark
	Directional method: $SF = \left(\frac{\tau_{h,Ed}}{F_{w,L,Rd}}\right)^2 + \left(\frac{\tau_{v,Ed}}{F_{w,T,Rd}}\right)^2$ $= \left(\frac{0.29}{0.84}\right)^2 + \left(\frac{0.33}{1.03}\right)^2$ $= 0.23 < 1.00$	OK!

2.3.10 Example 8 – Beam-to-Beam connection at different level

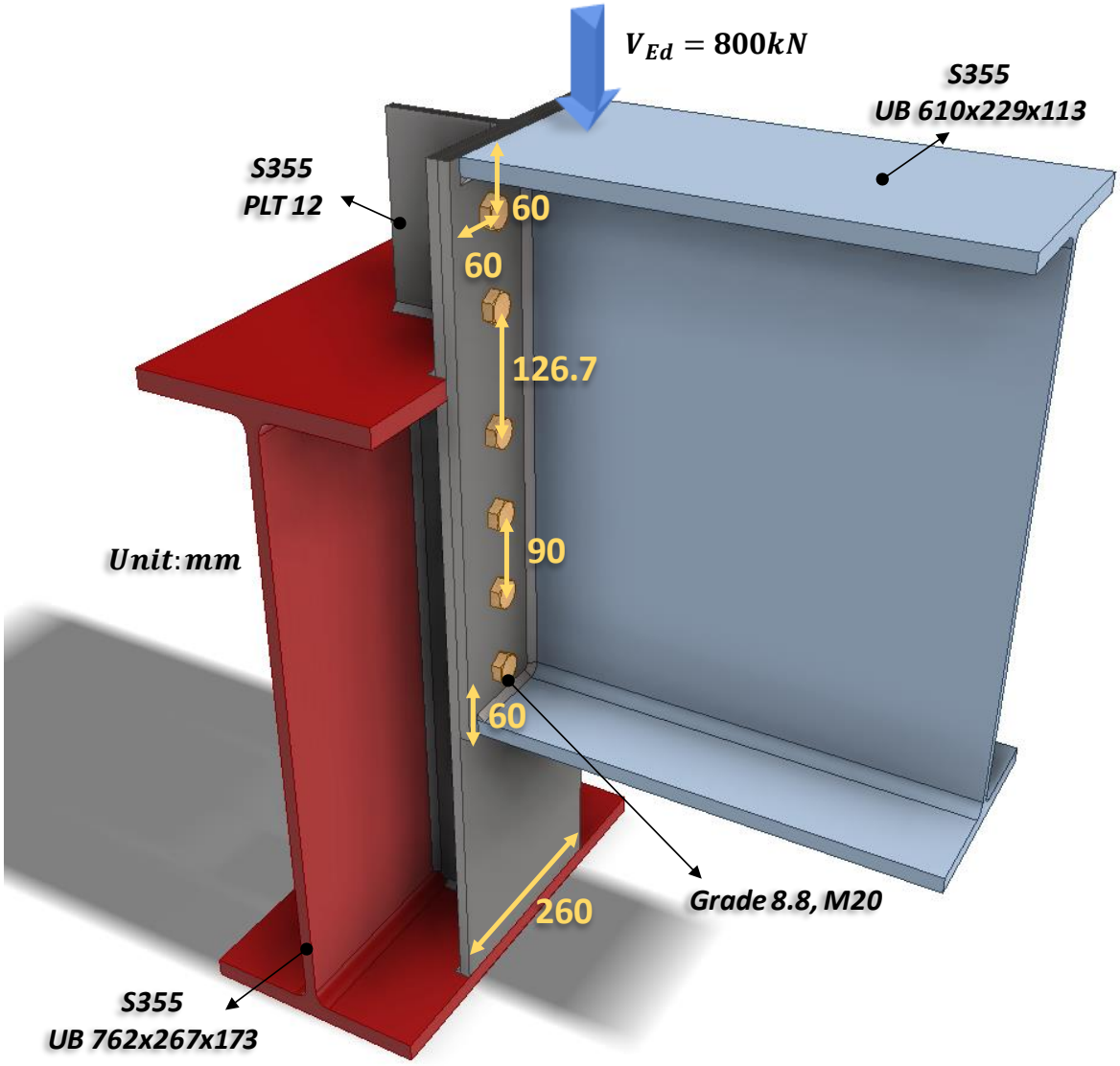

Check 1 – Weld group resistance (secondary beam & end plate)		
Ref	**Calculations**	**Remark**
SS EN1993-1-8	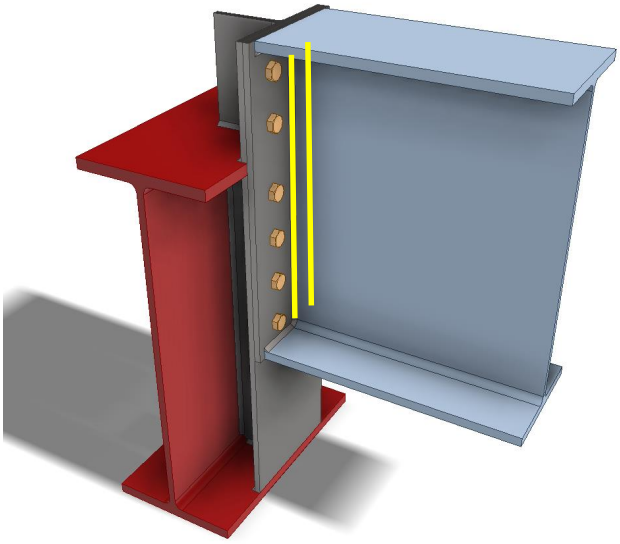 Assume the beam reaction force is resisted by the welds between secondary beam web and end plate only Length of weld: $l_w = 540mm$ Throat area: $A_u = 2l_w$ $= 2 \times 540$ $= 1080mm$ Applied longitudinal stress: $\tau_{Ed} = \frac{V_{Ed}}{A_u}$ $= \frac{800}{1080}$ $= 0.74kN/mm$ Choose fillet weld with 10mm leg length, 7.0mm throat thickness and grade S355: Longitudinal resistance: $F_{w,L,Rd} = 1.69kN/mm > \tau_{Ed} = 0.74kN/mm$	OK!

Check 2 – Secondary beam web shear resistance		
Ref	**Calculations**	**Remark**
	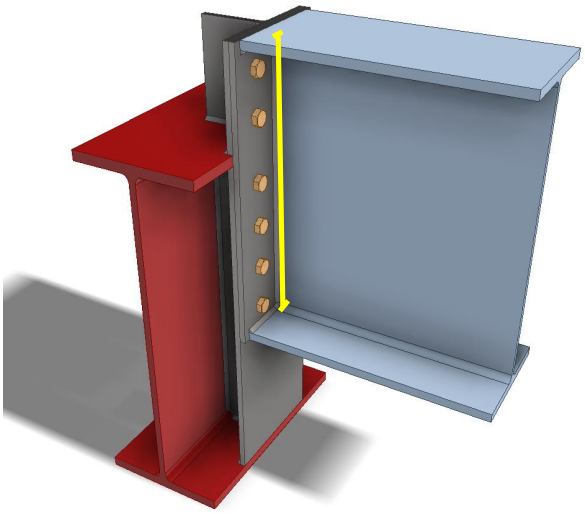	
SCI_P358 SS EN1993	Shear area of unnotched secondary beam: (S355 UB610x229x113) $A_v = A_{b,1} - 2b_{b1}t_{f,b1} + (t_{w,b1} + 2r_{b1})t_{f,b1}$ $= 14400 - 2 \times 228.2 \times 17.3 + (11.1 + 2 \times 12.7) \times 17.3$ $= 7135.73mm^2$ $V_{c,Rd} = \frac{A_v f_{y,b1}}{\sqrt{3}\gamma_{M0}}$ $= \frac{7135.73 \times 355 \times 10^{-3}}{\sqrt{3} \times 1.0}$ $= 1462.53kN > V_{Ed} = 800kN$	$\gamma_{M0} = 1.0$ (SS EN1993-1-1) $f_{y,b1} = 355MPa$ $(t_{w,b1} < 16mm)$ OK!

Check 3 – Bolt group resistance		
Ref	**Calculations**	**Remark**
	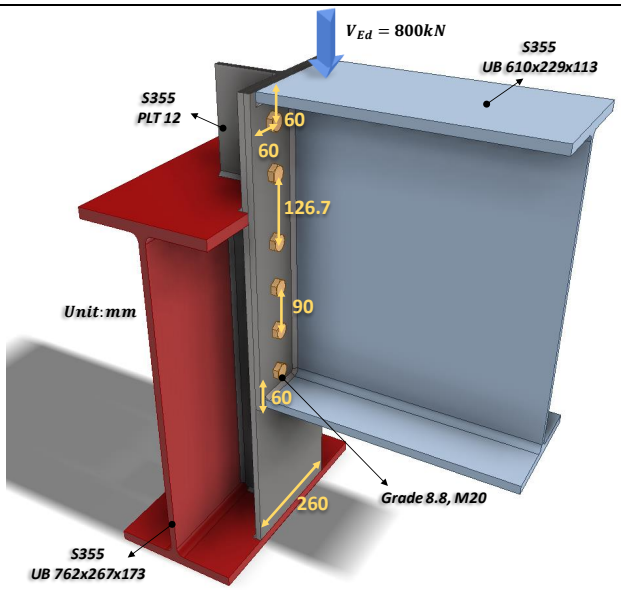	
SCI_P358 SS EN1993-1-8	Using Gr8.8, M20 bolts with: $A_s = 245mm^2, f_{ub} = 800MPa$ Distance between the centres of the end fasters: $L_j = 486.7mm > 15d = 360mm$ ∴Reduction factor is applied to cater long joints effect $\beta_{Lj} = \left(1 - \frac{L_j - 15d}{200d}\right)$ $= (1 - \frac{486.7 - 15 \times 20}{200 \times 20})$ $= 0.953$ **Shear resistance of one bolt:** $F_{v,Rd} = \frac{\alpha_v f_{ub} A_s}{\gamma_{M2}} \beta_{Lj}$ $= \frac{0.6 \times 800 \times 245}{1.25} \times 0.953 \times 10^{-3}$ $= 89.69kN$	For 8.8 bolts: $\alpha_v = 0.6$ $\gamma_{M2} = 1.25$ (SS EN1993-1-1)

Check 3 – Bolt group resistance		
Ref	**Calculations**	**Remark**
SS EN1993-1-8 SCI_P358	**Bearing resistance of end plate:** According to the rotational requirements for pinned connections of SS EN1993-1-8, the maximum thickness of end plate is 10mm or 12mm. $\therefore t_p = 10mm$ Reducing the gauge $p_3$will increase the connection stiffness, $p_3$should be carefully designed to meet the SS EN1993-1-8 requirements. $k_{1,p} = \min\left(\frac{2.8e_2}{d_0} - 1.7; \frac{1.4P_3}{d_0} - 1.7; 2.5\right)$ $= \min\left(2.8 \times \frac{60}{22} - 1.7; 1.4 \times \frac{140}{22} - 1.7; 2.5\right)$ $= 2.5$ $\alpha_{b,p} = \min\left(\frac{e_1}{3d_0}; \frac{p_1}{3d_0} - \frac{1}{4}; \frac{f_{ub}}{f_{u,p}}; 1.0\right)$ $= \min\left(\frac{60}{3 \times 22}; \frac{90}{3 \times 22} - \frac{1}{4}; \frac{800}{490}; 1.0\right)$ $= 0.909$ $F_{b,Rd,p} = \frac{k_{1,p}\alpha_{b,p}f_{u,p}dt_p}{\gamma_{M2}}$ $= \frac{2.5 \times 0.909 \times 4900 \times 20 \times 10}{1.25}$ $= 178.18kN$ For $F_{b,Rd} > 0.8F_{v,Rd}$: $F_{Rd} = 0.8nF_{v,Rd}$ $= 0.8 \times 12 \times 89.69$ $= 861.02kN > V_{Ed} = 800kN$	$\boldsymbol{e_1 = 60mm}$ $(1.2d_0 < e_1 < 4t + 40mm)$ $\boldsymbol{p_1 = 90mm}$ $(2.2d_0 < p_1 < 14t\ or\ 200mm)$ $\boldsymbol{e_2 = 60mm}$ $(1.2d_0 < e_2 < 4t + 40mm)$ $\boldsymbol{p_3 = 140mm}$ $(90 < p_3 < 140mm)$ $f_{u,p} = 510MPa$ $d_0 = 22mm$ Note: The reduction factor 0.8 allows for the presence of tension in the bolts OK!

Check 4 – Shear resistance of end plate		
Ref	**Calculations**	**Remark**
	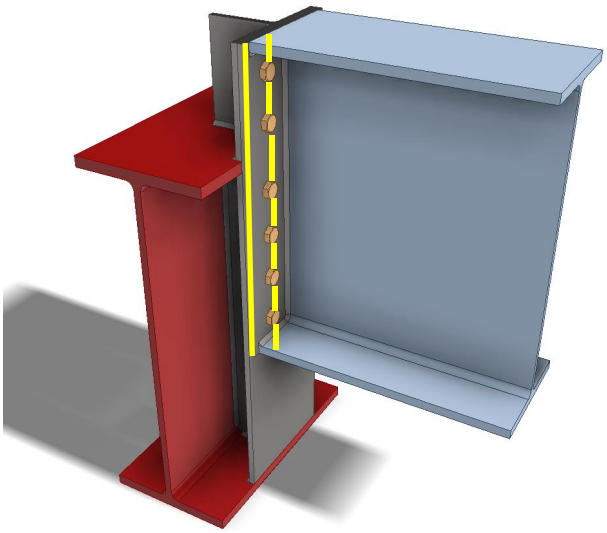	
SCI_P358	**End plate gross-section resistance:** Shear area: $A_v = 2h_p t_p$ $= 2 \times 607.6 \times 10$ $= 12152mm^2$ $V_{Rd,g} = \frac{A_v}{1.27}\frac{f_{y,p}}{\sqrt{3}\gamma_{M0}}$ $= \frac{12152 \times 355}{1.27 \times \sqrt{3}} \times 10^{-3}$ $= 1961.15kN$ Net shear area: $A_{v,net} = A_v - 2n_1 d_0 t_2$ $= 12152 - 2 \times 6 \times 22 \times 10$ $= 9512mm^2$ $V_{Rd,n} = \frac{A_{v,net} f_{u,p}}{\sqrt{3}\gamma_{M2}}$ $= \frac{9512 \times 490}{\sqrt{3} \times 1.25} \times 10^{-3}$ $= 2152.77kN$	$h_p = 607.6mm$ $t_p = 10mm$ $f_{y,p} = 355MPa$ $f_{u,p} = 510MPa$

Check 4 – Shear resistance of end plate		
Ref	**Calculations**	**Remark**
	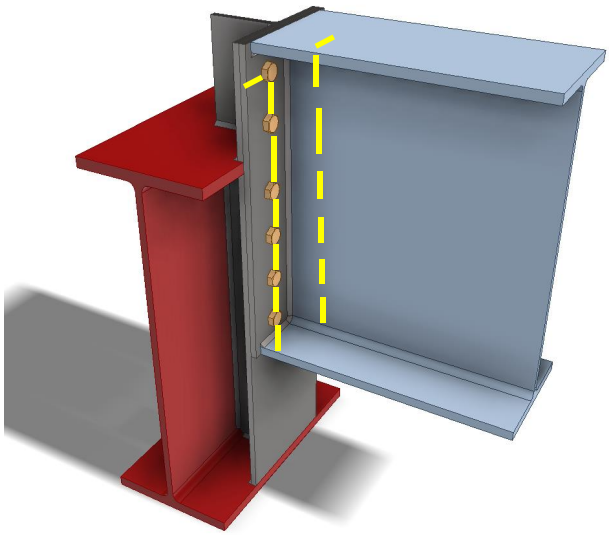 **End plate block tearing resistance:** Net area subject to tension: $A_{nt} = t_p\left(e_2 - \frac{d_0}{2}\right)$ $= 10 \times \left(60 - \frac{22}{2}\right)$ $= 490mm^2$ Net area subject to shear: $A_{nv} = t_p(h_p - e_1 - (n_1 - 0.5)d_0)$ $= 10 \times (607.6 - 60 - 5.5 \times 22)$ $= 4266mm^2$ $V_{Rd,b} = 2\left(\frac{f_{u,p}A_{nt}}{\gamma_{M2}} + \frac{f_{y,p}A_{nv}}{\sqrt{3}\gamma_{M0}}\right)$ $= 2 \times \left(490 \times \frac{4266}{1.25} + 355 \times \frac{490}{\sqrt{3}}\right) \times 10^{-3}$ $= 2132.87kN$ $V_{Rd} = \min(V_{Rd,g}; V_{Rd,n}; V_{Rd,b})$ $= \min(1961.15kN; 2152.77kN; 2132.87kN)$ $= 1961.15kN > V_{Ed} = 800kN$	OK!

Check 5 – Tension zone T-stub		
Ref	**Calculations**	**Remark**
SCI_P398	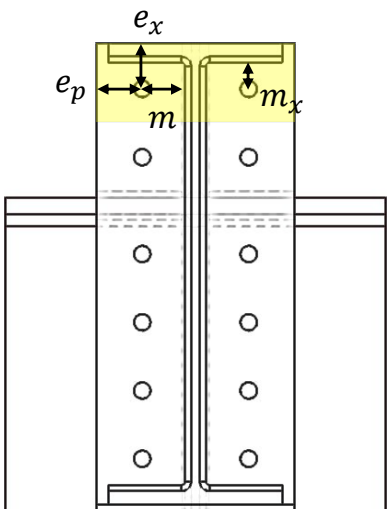 $m = \frac{p_3 - t_{wc} - 2 \times 0.8r_c}{2}$ $= \frac{140 - 12 - 2 \times 0.8 \times 12.7}{2}$ $= 53.84mm$ For the pair of bolts below beam flanges: $l_{eff,cp} = 2\pi m$ $= 2 \times \pi \times 53.84$ $= 338.29mm$ $l_{eff,nc} = \alpha m$ $= 6.4 \times 53.84$ $= 344.58mm$ $l_{eff,1} = \min(l_{eff,cp}, l_{eff,nc})$ $= \min(338.29, 344.58)$ $= 338.29mm$ $l_{eff,2} = l_{eff,nc} = 344.58mm$	$e = \min(e_p, e_c)$ $= 60mm$ $m_2 = e_1 - t_{fb} - 0.8s$ $= 34.7mm$ l_{eff} is calculated based on table 2.2 from section 2 of SCI_P398; $\lambda_1 = \frac{m}{m + e}$ $= 0.473$ $\lambda_2 = \frac{m_2}{m + e}$ $= \frac{34.7}{53.84 + 60}$ $= 0.305$ Based on the Alpha chart from Appendix G of SCI_P198, $\alpha = 6.4$

Check 5 – Tension zone T-stub		
Ref	**Calculations**	**Remark**
	Mode 1 resistance: $M_{pl,1,Rd} = \frac{0.25 \sum l_{eff,1}\, t_f^2 f_y}{\gamma_{M0}}$ $= \frac{0.25 \times 338.29 \times 10^2 \times 355}{1.0} \times 10^{-3}$ $= 3.058kNm$ $n = e_{min} \leq 1.25m$ $= 60mm < 1.25 \times 53.84 = 67.3mm$ $F_{T,1,Rd} = \frac{(8n - 2e_w)M_{pl,1,Rd}}{2mn - e_w(m+n)}$ $= \frac{(8 \times 60 - 2 \times 8.25) \times 3058}{2 \times 53.84 \times 60 - 8.25 \times (53.84 + 60)}$ $= 251.61kN$ Mode 2 resistance: $M_{pl,2,Rd} = \frac{0.25 \sum l_{eff,2}\, t_f^2 f_y}{\gamma_{M0}}$ $= \frac{0.25 \times 344.58 \times 10^2 \times 355}{1.0} \times 10^{-3}$ $= 3114.91kNmm$ Tensile resistance of bolt: $F_{t,Rd} = \frac{k_2 f_{ub} A_s}{\gamma_{M2}}$ $= \frac{0.9 \times 800 \times 245}{1.25} \times 10^{-3}$ $= 141.12kN$ For 2 bolts in a row, $\sum F_{t,Rd} = 2 \times 141.12 = 282.24kN$	For bolt M20, diameter of washer $d_w = 33mm$ $e_w = \frac{d_w}{4}$ $= 8.25mm$

Check 5 – Tension zone T-stub		
Ref	**Calculations**	**Remark**
	$F_{T,2,Rd} = \frac{2M_{pl,2,Rd} + n\sum F_{t,Rd}}{m+n}$ $= \frac{2 \times 3114.91 + 60 \times 282.24}{53.84 + 60}$ $= 201.71kN$ Mode 3 Resistance: $F_{T,3,Rd} = \sum F_{t,Rd} = 2 \times 141.12 = 282.24kN$ Resistance of end-plate in bending: $F_{t,ep,Rd} = \min(F_{T,1,Rd}; F_{T,2,Rd}; F_{T,3,Rd})$ $= \min(251.61kN; 201.71kN; 282.14kN)$ $= 201.71kN$ 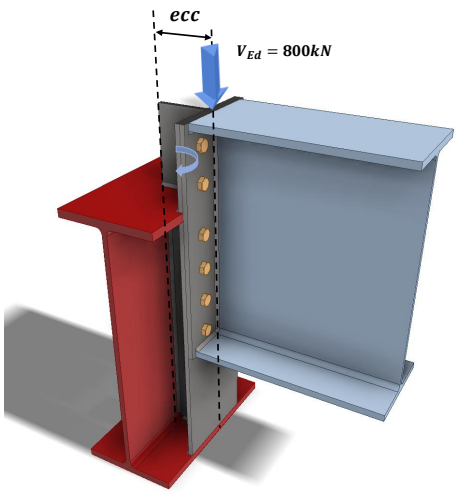 Eccentricity of applied load: $ecc = distance\ between\ endplate\ and\ centroid\ of\ primary\ beam$ $= \frac{b_f}{2}$ $= \frac{266.7}{2} = 133.35mm$ Nominal moment: $M = V_{Ed}ecc$ $= 800 \times 133.35$ $= 106680kNmm$	

Check 5 – Tension zone T-stub		
Ref	**Calculations**	**Remark**
	Moment arm: $r = distance\ between\ cetroid\ of\ flanges\ of\ secondary\ beam$ $= 607.6 - 17.3$ $= 590.3mm$ Tensile force acting on the top flange: $F_{t,Ed} = \frac{M}{r}$ $= \frac{106680}{590.3}$ $= 180.72kN < F_{t,ep,Rd} = 201.71kN$	OK!
	Tension resistance of bolt: $F_{t,Rd} = \frac{k_2 f_{ub} A_s}{\gamma_{M2}}$ $= \frac{0.9 \times 800 \times 245}{1.25} \times 10^{-3}$ $= 141.12kN$	
	Combined shear and tension resistance of bolt: $\frac{F_{v,Ed,b}}{F_{v,Rd}} + \frac{F_{t,Ed,b}}{1.4F_{t,Rd}}$ $= \frac{V_{Ed}}{nF_{v,Rd}} + \frac{F_{t,Ed}}{4 \times 1.4 \times F_{t,Rd}}$ $= \frac{800}{12 \times 89.69} + \frac{180.72}{4 \times 1.4 \times 141.12}$ $= 0.97 < 1.0$	Assume the applied shear force is shared equally among all bolts and the tension force is shared by first two rows of bolt.

Note:

For the T-stub checking, the resistance of first row of bolts is sufficient to resist the tensile force due to the nominal moment, hence, no further checking is carried out for the rows of bolts below. If the resistance of the first row is insufficient, the combine resistance of multiple rows of bolts may be checked.

Check 6 – Welding of stiffener		
Ref	**Calculations**	**Remark**
SS EN1993	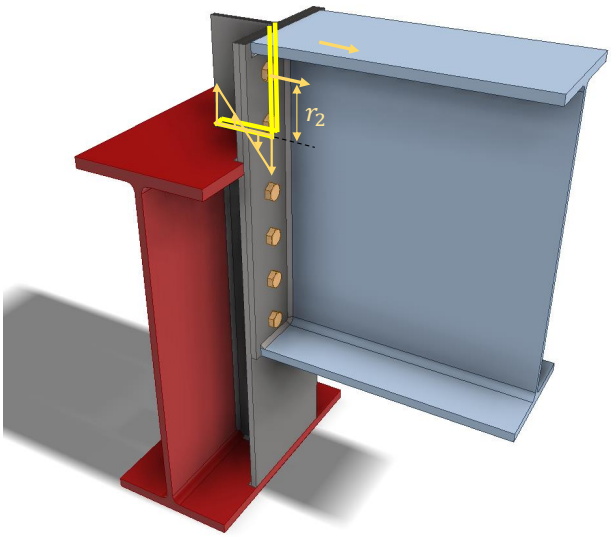 Assume the tensile force on the top flange of the secondary beam is applied on the first row of bolts: $Moment\ act\ on\ the\ welding$: $M = F_{t,Ed} r_2$ $= 180.72 \times 159.2$ $= 28770.89 kNmm$ Polar moment of inertial of the fillet weld: $J = \frac{d^3}{12}$ $= \frac{133.35^3}{12} = 197604.95 mm^3$ Applied transverse stress on the end of the welding: $\tau_{Ed} = \frac{\frac{Md}{2}}{2J}$ $= 28770.89 \times \frac{\frac{133.35}{2}}{2 \times 197604.95}$ $= 4.85 kN/mm$	$Moment\ arm = distance\ away\ from\ the\ welding\ (r_2) = 159.2mm$ $length\ of\ weld$: $d = 133.35mm$

Check 6 – Welding of stiffener		
Ref	**Calculations**	**Remark**
	Assume the welding for the stiffener is all-round fillet weld, the transverse resistance of the welding at the end of the welding is: $\tau_{Rd} = F_{w,R,Rd} t_p$ $= 2.07 \times 10$ $= 20.70 kN/mm > \tau_{Ed} = 4.85 kN/mm$	OK!

Check 7 – Buckling resistance of the stiffener		
Ref	**Calculations**	**Remark**
	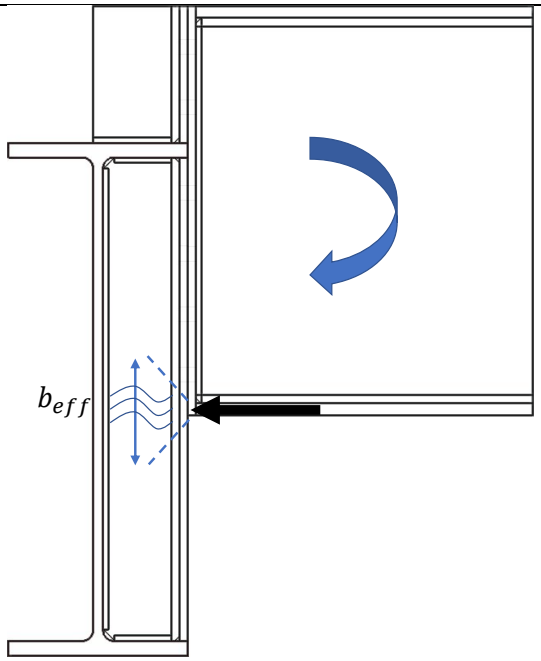	
SCI_P398	Dispersion length: $b_{eff,c,wc} = t_{fb} + 2s_f + 5(t_p + s) + s_p$ $= 17.3 + 2 \times 10 + 5 \times (10 + 12.7) + 20$ $= 170.8mm$ Design compression resistance of stiffener: $F_{c,wc,Rd} = \frac{\omega k_{wc} \rho b_{eff,c,wc} t_p f_{yp}}{\gamma_{M1}}$ $= 170.8 \times 10 \times 355 \times 10^{-3}$ $= 606.34kN > F_{t,Ed} = 180.72kN$ Web buckling resistance is adequate without the additional of plate stiffener. No further check is required.	$t_{fc} = 17.3mm$ $t_p = 12mm$ $s_f = 10mm$ $s = r_c = 12.7mm$ $s_p = 2t_p = 20mm$ $\bar{\lambda}_p = 0.932 \sqrt{\frac{b_{eff,c,wc} d_c f_y}{E t_p^2}}$ $= 0.49 < 0.72$ $\therefore \rho = 1$ Assume $k_{wc} = \omega = 1$

2.4 Design steps for moment-resisting connections – bolted connections

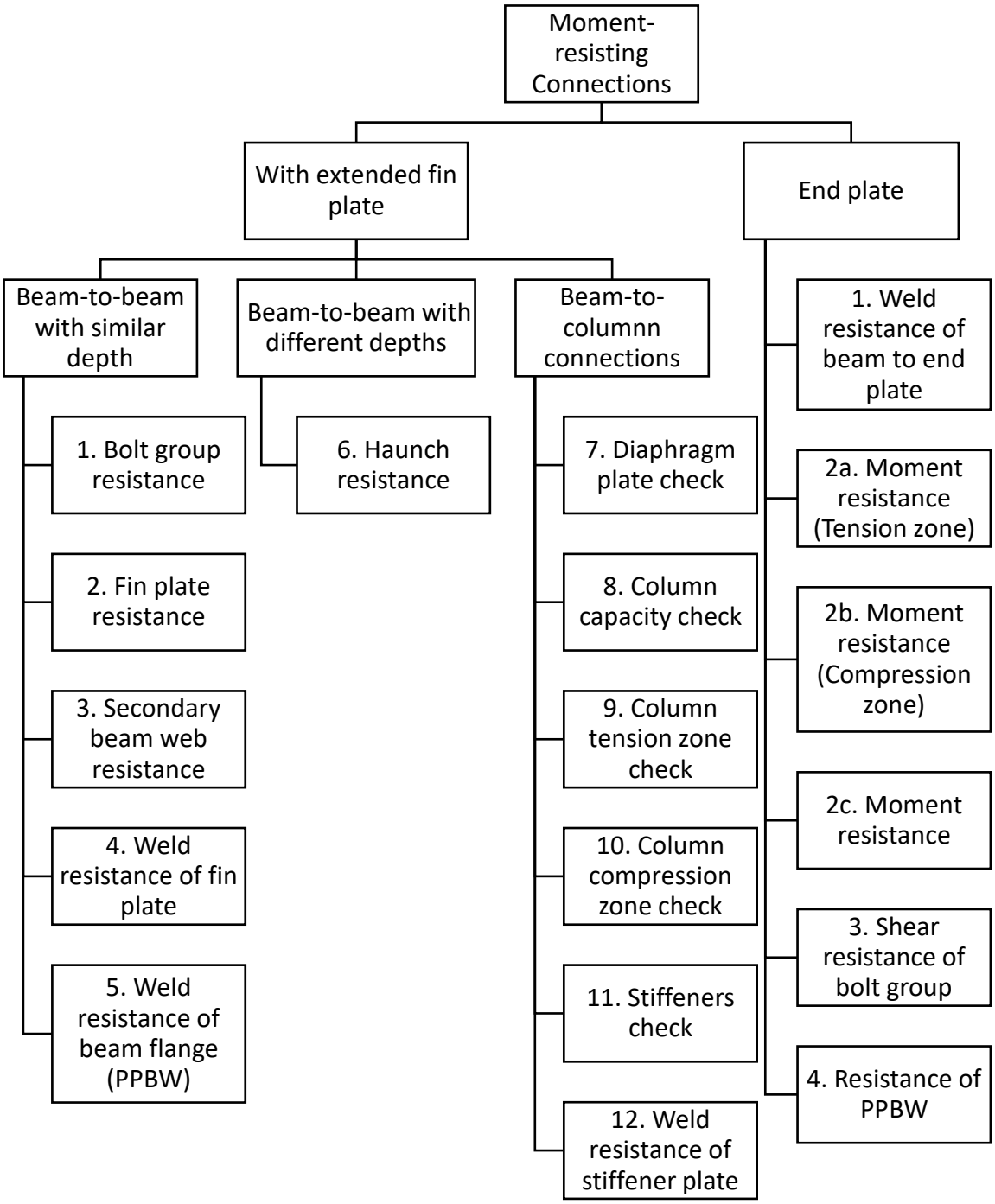

Figure 2-2 Design steps for moment connections

The moment-resisting connections in this chapter can be divided into two main categories, they are connections with extended fin plate and connections with end plate. The design details for different types of connections are shown in Figure *2-2*.

For beam-to-beam moment-resisting connection with hogging moments transferred to the primary beams, it is recommended to have full penetration butt weld to transfer the tension within the top flanges while the bottom flange which is in compression, a partial penetration butt weld will be enough to transfer the compression forces to the bottom flange of the primary beam.

It should be noted that in composite deck construction, welding is usually the preferred connection for the top flange of beams rather than bolting as the use of bolts will clash the installation of the composite decks.

2.4.1 Extended fin plate connections design procedures

According to AISC Guide, for flange-plated moment connections, the shear-plate connection can be designed for shear only while the rotation is considered resisted by the flange connections.

Bolt group resistance

Similar to section 2.3.1

Fin plate resistance

Similar to section 2.3.1

Secondary beam web resistance

Similar to section 2.3.1

Weld resistance of fin plate

Similar to section 2.3.1

Weld resistance of beam flange

Assume the applied moment is taken by the flanges of the secondary beam, for full penetration butt weld, assume the strength is equal to the beam flange tensile strength.

Beam flange tensile strength:

$$F_{Rd,flange} = \frac{t_f b_f f_{y,bf}}{\gamma_{M0}}$$

where

t_f: thickness of beam flange

b_f: width of beam flange

$f_{y,bf}$: yield strength of beam flange

Applied tensile force on beam flange:

$$F_{Ed} = \frac{M_{Ed}}{r} < F_{Rd,flange}$$

where

r: moment arm

$r = h_b - t_f$

h_b: depth of secondary beam

Resistance of partial penetration butt weld (PPBW):

The design resistance of a partial penetration butt weld can be determined using the method for a deep penetration fillet weld. (SS EN1993-1-8 Clause 4.7.2(1))

$F_{Rd} = F_{w,T,Rd} b_f$

where

$F_{w,T,Rd}$: transverse resistance of welding, can be calculated from 2.3.1 (4)

If the angle between the transverse force and weld throat $\theta = 90°$, the transverse resistance of the weld:

$$F_{w,T,Rd} = \frac{0.9 f_u}{\gamma_{M2}} a$$

*The minimum throat thickness of a longitudinal partial penetration butt weld should be $2\sqrt{t}$ (in mm), where t is the thickness of the thinner part of joint. (BS 5950-1 6.9.2)

<u>Haunch resistance</u>

For beam-to-beam or beam-to-column connections with different beam depths, haunch may be used to provide transition between beams. The haunch resistance hence needs to be checked.

Shear:

In order to reduce stress concentration, the thicknesses of flange and web are same as secondary beam.

Gross section shear resistance:

$$V_{Rd,g} = \frac{h_h t_w f_{y,w}}{\sqrt{3}\gamma_{M0}}$$

where

h_h: depth of haunch at bolt line

t_w: thickness of haunch web

Net shear resistance:

$$V_{Rd,n} = \frac{A_{v,net} f_{y,w}}{\sqrt{3}\gamma_{M2}}$$

where

$A_{V,net}$: net shear area

$A_{v,net} = h_h t_w - n d_0 t_w$

Shear resistance of haunch web:

$V_{Rd} = \min(V_{Rd,g}, V_{Rd,n}) > V_{Ed}$

*Suggestions to reduce the stress concentration:

As the thicknesses of the flanges of primary beam and secondary beam may be different, the connection between the flanges may result in stress concentration. In order to reduce the stress concentration, transition should be provided at butt weld area. Figure *2-3* below shows the example of transition.

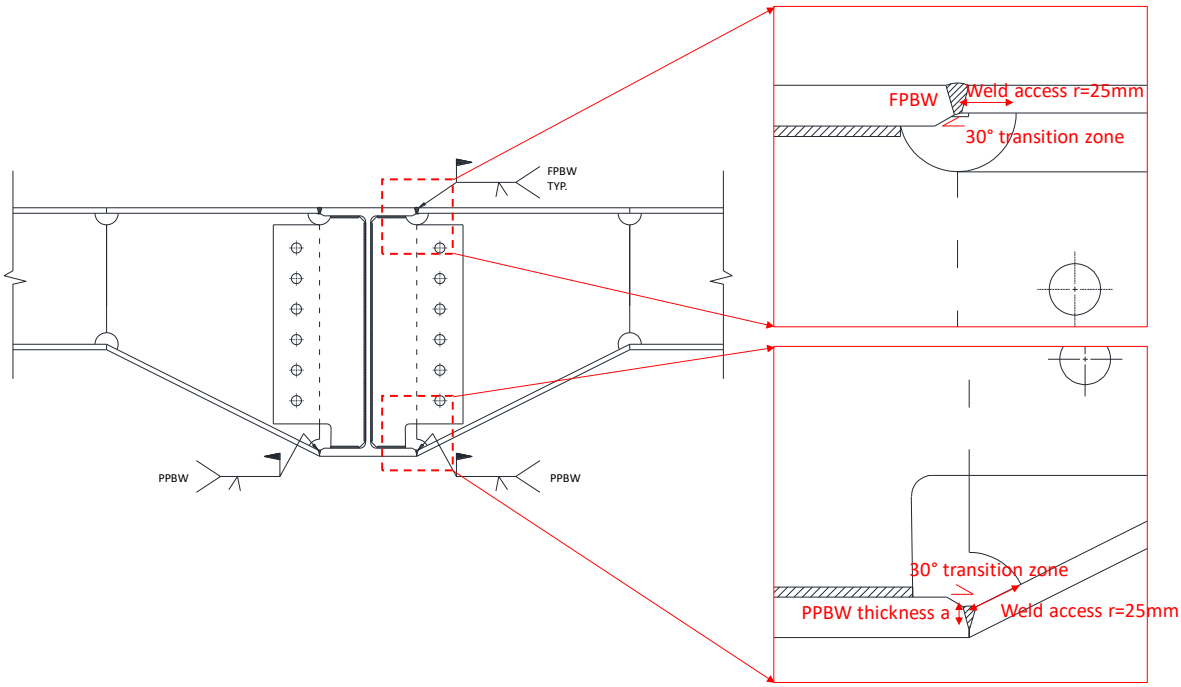

Figure 2-3 Example of transition between flanges

Shear buckling (SS **EN1993-1-5):**

To check the shear buckling resistance of the haunch web, the largest height of the haunch was taken as the depth for calculation. The haunch was checked using similar method of checking rectangular girder. If

$$\frac{d}{t_w} > \frac{72\varepsilon}{\eta}$$

the haunch web is susceptible to shear buckling, shear buckling check need to be performed and transverse stiffeners should be provided at the supports.

where

$$\varepsilon = \sqrt{235/f_{yw}}$$

$$\eta = 1$$

Maximum allowable slenderness of haunch web:

$$\frac{kE}{f_{yf}}\sqrt{\frac{A_w}{A_{fc}}} > \frac{d}{t_w}$$

where

$k = 0.55$, for elastic moment resistance utilized

A_{fc}: cross section area of the compression flange

$A_{fc} = t_f b_f$

A_w: cross section area of haunch web

$A_w = dt_w$

$E = 210GPa$

Contribution from the web:

$$V_{bw,Rd} = \frac{\chi_w f_{yw} d t_w}{\sqrt{3}\gamma_{M1}}$$

where

$$\bar{\lambda}_w = \frac{d}{86.4 t_w \varepsilon_w}$$

$$\chi_w = \frac{0.83}{\bar{\lambda}_w}$$

d: distance between fillet of haunch

Contribution from the flange:

$$V_{bf,Rd} = \frac{b t_f^2 f_{yf}}{c\gamma_{M1}}\left(1 - \left(\frac{M_{Ed}}{M_{f,Rd}}\right)^2\right)$$

where

$$M_{f,Rd} = \frac{f_{yf}(b t_f)(h - t_f)}{\gamma_{M0}}$$

$$c = a\left(0.25 + \frac{1.6 b t_f^2 f_{yf}}{t_w d^2 f_{yw}}\right)$$

a: distance between transverse stiffeners

Shear buckling resistance:

$$V_{b,Rd} = V_{bw,Rd} + V_{bf,Rd} < \frac{\eta f_{yw} d t_w}{\sqrt{3}\gamma_{M1}} > V_{Ed}$$

When haunch is used to connected beams with different height, the length of the haunch should be long enough to ensure the tapered angle is not greater than 45° to prevent stress concentration.

<u>Diaphragm plate check</u>

External diaphragm plate may be used to connect beams to hollow section column. As there is no relevant design guide in SS EN1993 for the width of external diaphragm plate, CIDECT and Chinese code GB were used to calculate the minimum design width.

According to CIDECT design guide 9 – For structural hollow section column connections, the axial resistance of diaphragm ring:

$$N_{Rd} = 19.6\left(\frac{d_c}{t_c}\right)^{-1.54}\left(\frac{b}{d_c}\right)^{0.14}\left(\frac{t_p}{t_c}\right)^{0.34}\left(\frac{d_c}{2}\right)^2 f_{yc} \geq N_{Ed}$$

where

dc: diameter of hollow section column

t_c: thickness of hollow section column

b: width of the diaphragm plate

t_p: thickness of diaphragm plate (at least as thick as the beam flange)

f_{yc}: yield strength of hollow section column

Range of validity:

$$14 \leq \frac{d_c}{t_c} \leq 36$$

$$0.05 \leq \frac{b}{d_c} \leq 0.14$$

$$0.75 \leq \frac{t_p}{t_c} \leq 2.0$$

According to GB 50936:2014, the minimum width of diaphragm plate:

$$b \geq \frac{F_1(\alpha)N_{Ed}}{t_p f_p} - \frac{F_2(\alpha)b_e t_c f_c}{t_p f_p}$$

where

$$F_1(\alpha) = \frac{0.93}{\sqrt{2\sin^2\alpha + 1}}$$

$$F_2(\alpha) = \frac{1.74 sin\alpha}{\sqrt{2\sin^2\alpha + 1}}$$

b_e: effective width of external diaphragm ring

$$b_e = \left(0.63 + \frac{0.88 b_b}{d_c}\right)\sqrt{d_c t_c} + t_p$$

α: angle between axial force and cross section of diaphragm ring where transition occur

$$\alpha = \sin^{-1}\left(\frac{\frac{b_b}{2}}{d_c + b}\right)$$

b_b: width of beam flange

<u>Concrete filled column (</u>SS <u>EN1994-1-1)</u>

For concrete filled circular hollow section column, the shear bond between the concrete and steel shall be checked for adequacy to transfer the reaction force from the beams to the composite column.

The reaction force from the beam is assumed to be transferred to the composite column via the steel tube. The force transfer to the concrete section may be assumed to be proportion to the ratio of the sectional compression resistance as:

$$N_{cs,Ed} = (V_{Ed1} + V_{Ed2})\left(1 - \frac{N_{a,Rd}}{N_{pl,Rd}}\right)$$

where

$N_{a,Rd}$: steel section axial resistance

$N_{pl,Rd}$: axial resistance of composite column

V_{Edn}: shear forces from beams

The longitudinal shear stress at the surface of the steel section:

$$\tau_{Ed} = \frac{N_{cs,Ed}}{u_a l_v}$$

where

u_a: perimeter of the section

$u_a = \pi(D - 2t)$

l_v: load introduction length (should not exceed 2b,2h or L/3) (b, h and L are width, height and length of beam)

If τ_{Rd} (maximum longitudinal shear resistance) $\leq \tau_{Ed}$, shear studs may be used to carry the remaining part of the shear force transferred to the concrete.

<u>Column tension zone check (SCI_P398)</u>

For beam-to-column moment resisting connections in major axis, the applied moment may induce tension and compression forces on the beam flanges and hence the tension and compression resistances of beam flange and column web need to be checked.

Effective width of a beam flange (hot-rolled) connected to an unstiffened column:

$$b_{eff} = t_{wc} + 2r_c + 7kt_{fc} \leq \min(b_b; b_c)$$

where

t_{wc}: thickness of the column web

r_c: root radius of column

t_{fc}: thickness of the column flange

$$k = \left(\frac{t_{fc}}{t_{fb}}\right)\left(\frac{f_{y,c}}{f_{y,b}}\right) \leq 1$$

b_b: width of beam

b_c: width of column

Design resistance of beam flange:

$$F_{t,fb,Rd} = \frac{b_{eff} t_{fb} f_{y,b}}{\gamma_{M0}}$$

where

t_{fb}: thickness of beam flange

$f_{y,b}$: yield strength of beam

b_{eff}: effective width of beam flange

Effective length of column web:

$$b_{eff,t,wc} = t_{fb} + 2s_f + 5(t_{fc} + s)$$

where

s_f: leg length of beam flange to column fillet welds

t_{fc}: thickness of column flange

s: for rolled section is the root radius r; if column is a welded section, s is the leg length of column web to flange fillet welds

Design resistance of column web:

$$F_{t,wc,Rd1} = \frac{\omega b_{eff,t,wc} t_{wc} f_{yc}}{\gamma_{M0}}$$

where

ω: reduction factor for the interaction with shear, can be determined from SS EN1993-1-8 Table 6.3

$\gamma_{M0} = 1.0$

If design resistance of beam flange or design resistance of column web is insufficient, stiffeners are needed to increase the resistance. The check for resistance of stiffened connection will be shown in section (11).

<u>Column compression zone check</u>

Compression resistance of column web:

$$F_{c,wc,Rd} = \frac{\rho \omega k_{wc} b_{eff,c,wc} t_{wc} f_{yc}}{\gamma_{M0}}$$

where

ω: reduction factor that takes account of the interaction with shear, can be determined from SS EN1993-1-8 Table 6.3

$b_{eff,c,wc}$: effective length of column web in compression, it is equal to the effective length of column web in tension

ρ: reduction factor for plate buckling

if $\overline{\lambda_p} \leq 0.72$, $\rho = 1.0$

if $\overline{\lambda_p} > 0.72$, $\rho = (\overline{\lambda_p} - 0.2)/\overline{\lambda_p^2}$

$$\lambda_p = 0.932\sqrt{\frac{b_{eff,c,wc}d_{wc}f_{y,wc}}{Et_{wc}^2}}$$

$$d_{wc} = h_c - 2(t_{fc} + s)$$

k_{wc}: reduction factor for maximum coexisting longitudinal compression stress in the column web, conservatively taken as 0.7

Shear resistance of column web:

If $d_c/t_{wc} \leq 69\varepsilon$, $V_{wp,Rd} = 0.9f_{yc}A_{vc}/(\gamma_{M0} \times \sqrt{3})$

If $d_c/t_{wc} > 69\varepsilon$, $V_{wp,Rd} = 0.9V_{bw,Rd}$

where

A_{vc}: shear area of the column

$$A_{vc} = A_c - 2b_ct_{fc} + (t_{wc} + 2r_c)t_{fc}$$

$$\varepsilon = \sqrt{\frac{235}{f_{yc}}}$$

$V_{bw,Rd}$: shear buckling resistance of the web, it can be calculated from SS EN1993-1-5 5.2(1)

d_c: clear depth of column web

If compressive resistance or shear resistance of column web is lesser than the applied compressive force, stiffeners are needed to strengthen the column web. The detail calculation of stiffened column can be found in section (11).

<u>Stiffeners check (SCI_P398)</u>

Tension stiffener:

Tension stiffeners should be provided symmetrically on either side of the column web and may be full depth or partial depth.

Minimum width of tension stiffener:

$$b_{sg,min} = \frac{0.75(b_c - t_{wc})}{2}$$

where

b_c: width of column

Tensile resistance of tension stiffener:

$$F_{t,s,Rd} = \frac{A_{sn}f_{ys}}{\gamma_{M0}} > F_{Ed}$$

where

A_{sn}:net area of stiffener

$$A_{sn} = 2b_{sn}t_s$$

f_{ys}: yield strength of stiffener plates

The above calculation is applicable for full depth stiffener. For partial depth tension stiffeners, additional check on the length for shear in the stiffeners against applied forces is needed. The details of calculations can be found in SCI_P398.

Compression stiffener:

For compression stiffeners, they should be provided symmetrically on either side of the column web and they should be full depth stiffeners. According to SCI_P398, the width to thickness ratio of the stiffener should be limited to 14ε to prevent torsional buckling of the stiffener. The effective stiffener cross section consists of both the stiffener section and part of the column web section. The length of web act as stiffener section is taken as $15\varepsilon t_{wc}$ on either side of the stiffener.

Resistance of cross-section:

$$N_{c,Rd} = \frac{A_{s,eff} f_{ys}}{\gamma_{M0}}$$

where

$A_{s,eff}$: effective area of stiffeners

$$A_{s,eff} = 2b_{sg}t_s + (30\varepsilon t_{wc} + t_s)t_{wc}$$

b_{sg}: width of stiffener

t_s: thickness of stiffener

f_{ys}: yield strength of stiffener

If $\bar{\lambda} \leq 0.2$, flexural buckling resistance of the compression stiffener may be ignored

$$\bar{\lambda} = \frac{l}{i_s \lambda_1}$$

where

l: critical buckling length of the stiffener

$$\lambda_1 = \pi\sqrt{E/f_y}$$

i_s: the radius of gyration of the stiffener

$$i_s = \sqrt{I_s/A_{s,eff}}$$

I_s: second moment of area of stiffener

$$I_s = \frac{\left(2b_{sg} + t_{wc}\right)^3 t_s}{12}$$

If $\bar{\lambda} > 0.2$, flexural buckling resistance of the compression stiffener:

$$N_{b,Rd} = \frac{\chi A_{s,eff} f_y}{\gamma_{M1}}$$

where

$\alpha = 0.49$

$\Phi = 0.5\left(1 + \alpha\left(\bar{\lambda} - 0.2\right) + \overline{\lambda^2}\right)$

$$\chi = \frac{1}{\Phi + \sqrt{\left(\Phi^2 - \overline{\lambda^2}\right)}} \leq 1.0$$

<u>Weld resistance of stiffener plate</u>

According to SCI_P398, the minimum throat thickness for flange weld of stiffener:

$$a_{min} = \frac{t_s}{2}$$

Applied stress of web weld:

$$\tau_{Ed} = \frac{F_{Ed}}{2l}$$

where

l: effective length of web weld

$l = 2(h_s - 2 \times cope\ hole\ size - 2s)$

s: leg length of web weld

Choose fillet weld with longitudinal stress resistance $F_{w,L,Rd} > \tau_{Ed}$.

2.4.2 End plate connections design procedures

<u>Weld resistance of beam to end plate</u>

According to SS EN1993-1-8 6.2.2 (1), in weld and bolted connections with end-plates, the welds connecting the beam web should be designed to transfer the shear force from the connected beam to the joint, without any assistance from the welds connecting the beam flanges.

Shear resistance of beam web fillet weld:

$V_{Rd} = F_{w,L,Rd} L_w \geq V_{Ed}$

where

$F_{w,L,Rd}$: longitudinal resistance of web fillet weld

L_w: length of fillet weld connecting beam web ($2d_b$)

Tensile resistance of fillet weld connecting beam flange to end plate:

$F_{Rd} = L F_{w,T,Rd} \geq F_{Ed}$

where

L: length of fillet weld connecting beam flange to end plate

$L = 2b - t_{wb} - 2r - 4t_f$

F_{Ed}: applied tensile force due to moment

$$F_{Ed} = \frac{M_{Ed}}{h - t_f}$$

$F_{w,T,Rd}$: transverse resistance of flange fillet weld

<u>Moment resistance (Tension zone)</u>

Individual bolt row resistance

The individual resistance for each row of bolts is firstly calculated, starting from the top row and working down. The individual resistance of each row is the minimum of the following resistance:

- Bending of end plate
- Bending of column flange
- Tension in beam web
- Tension in column web

For bending of end plate and column flange, the resistances are calculated based on the resistance of the equivalent T-stubs with effective length relevant to the location of bolts. The resistances are calculated for three possible modes of failure which are shown below.

Mode 1: Complete Flange Yielding

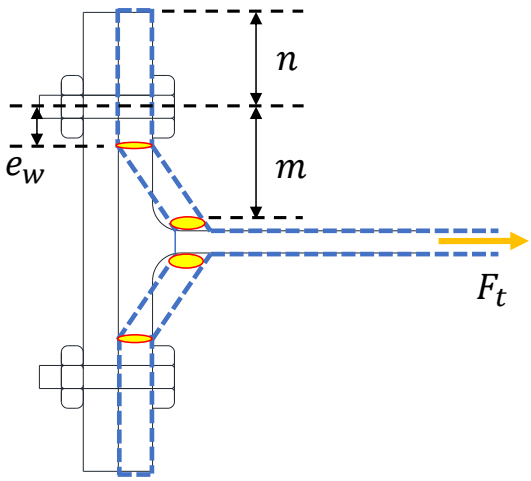

According to SS EN 1993-1-8:

Method 1:

$$F_{T,1,Rd} = \frac{4M_{pl,1,Rd}}{m}$$

where

$M_{pl,1,Rd}$: plastic resistance moment of the equivalent T-stubs

$$M_{pl,1,Rd} = \frac{0.25 \sum l_{eff,1}\, t_p^2 f_y}{\gamma_{M0}}$$

$\Sigma l_{eff,1}$: effective length of the equivalent T-stubs for mode 1, taken as the lesser of effective length for circular and non-circular pattern. (The effective length can be calculated using SCI_P398 Table 2.2.)

f_y: yield strength of the T-stub flange

Method 2:

$$F_{T,1,Rd} = \frac{(8n - 2e_w)M_{pl,1,Rd}}{2mn - e_w(m+n)}$$

where

$e_w = d_w/4$

d_w: diameter of the washer or the width across the points of the bolt head

Mode 2: Bolt Failure with Flange Yielding

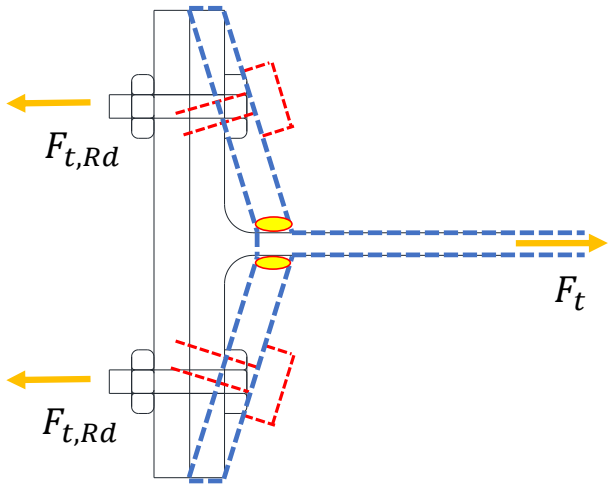

$$F_{T,2,Rd} = \frac{2M_{pl,2,Rd} + n\sum F_{t,Rd}}{m+n}$$

where

$$M_{pl,2,Rd} = \frac{0.25\sum l_{eff,2}\, t_p^2 f_y}{\gamma_{M0}}$$

$\Sigma l_{eff,2}$: effective length of the equivalent T-stubs for mode 2, taken as the effective length for non-circular pattern. (The effective length can be calculated using SCI_P398 Table 2.2.)

$\Sigma F_{t,Rd}$: total tension resistance for bolts in the T-stub ($= 2F_{t,Rd}$)

$$F_{t,Rd} = \frac{k_2 f_{ub} A_s}{\gamma_{M2}}$$

$k_2 = 0.9$

f_{ub}: ultimate strength of bolt

A_s: non-threaded area of bolt or shear area of bolt

Mode 3: Bolt Failure Resistance

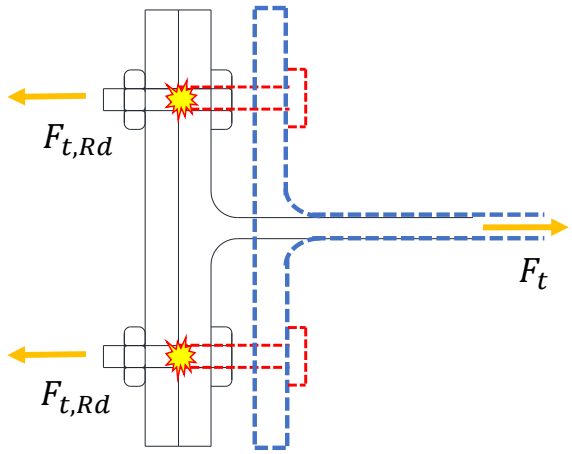

$$F_{T,3,Rd} = \sum F_{t,Rd} = 2F_{t,Rd}$$

The stiffness of the end plate connection may not be fully rigid if the first two failure modes govern the failure. The connection can be model as rigid only when mode 3 is the critical mode by making the end plate thickness at least equal to the bolt diameter.

For column web tension resistance:

$$F_{t,wc,Rd} = \frac{\omega b_{eff,t,wc} t_{wc} f_{y,wc}}{\gamma_{M0}}$$

where

ω: reduction factor takes account of the interaction with shear, can be calculated from SS EN1993-1-8 Table 6.3.

$b_{eff,t,wc}$: effective length of column web, according to SS EN1993-1-8 6.2.6.3 (3), taken as the effective length of equivalent T-stub representing the column web

If web tension stiffeners are adjacent to the bolt row (within $0.87w$), web tension will not govern the resistance of the bolt row.

For beam web tension resistance:

$$F_{t,wb,Rd} = \frac{b_{eff,t,wb} t_{wb} f_{y,b}}{\gamma_{M0}}$$

where

$b_{eff,t,wb}$: effective length of beam web, taken as effective length of equivalent T-stub (SS EN1993-1-8 6.2.6.8 (2))

t_{wb}: thickness of beam web

$f_{y,b}$: yield strength of beam web

Groups of bolt row resistance

As there are different failure modes considered, the resistance of a group of bolt rows may be less than the sum of all individual resistance of bolt rows. The resistance of groups of bolt rows are calculated using the same method as the individual bolt row. The effective length of

equivalent T-stubs of a group of bolt row can be calculated using SCI_P398 Table 2.3. If bolt rows are separated by a beam flange or stiffener, no group effect should be considered.

Effective resistance of bolt rows

The resistance of a bolt row may be limited by the group failure mode. It is assumed that the highest row of bolt acts as individual row and the following bolt rows provide the additional resistance. The effective resistances of bolt rows are summarized below:

Effective resistance of first bolt row:

$F_{t1,Rd}$ = individual resistance of bolt row 1

Effective resistance of second bolt row:

$F_{t2,Rd}$ = min [individual resistance of bolt row 2;

(group resistance of bolt row 1 & 2) – individual resistance of bolt row 1]

Effective resistance of third bolt row:

$F_{t3,Rd}$ = min [individual resistance of bolt row 3;

(group resistance of bolt row 2 & 3) – individual resistance of bolt row 2;

(group resistance of bolt row 1, 2 & 3) – individual resistance of bolt row 1 & 2]

Subsequent bolt rows will follow the same manner.

Ductility of the bolt rows needs to be checked to ensure the stress distribution between bolt rows. If any of the bolt row is not ductile, reduction of the effective resistances of the bolt rows need to be carried out.

<u>Moment resistance (Compression zone)</u>

The compression zone is at the level of the bottom flange of the beam. On the beam side, the compression resistance is limited by the resistance of the beam flange. On the column side, compression load is dispersed through end plate and column flange by an assumed angle 45° to the column web. Stiffeners may be needed if column web compression resistance is insufficient.

Resistance of column web

$$F_{c,wc,Rd} = \frac{\omega k_{wc} \rho b_{eff,c,wc} t_{wc} f_y}{\gamma_{M1}}$$

where

$b_{eff,c,wc}$: effective length of column web resisting compression

$b_{eff,c,wc} = t_{fb} + 2s_f + 5(t_{fc} + s) + s_p$ (provided the end plate has sufficient depth to ensure the complete dispersion of forces)

s: root radius of rolled section; $\sqrt{2}a_c$ for welded section;

a_c: throat thickness of fillet weld connecting column web and flange

s_f: leg length of the fillet weld connecting beam flange and end plate

$s_p = 2t_p$

ω: reduction factor that takes account of the interaction with shear, can be determined from SS EN1993-1-8 Table 6.3

if $\overline{\lambda_p} \leq 0.72$, $\rho = 1.0$

if $\overline{\lambda_p} > 0.72$, $\rho = (\overline{\lambda_p} - 0.2)/\overline{\lambda_p^2}$

$$\lambda_p = 0.932\sqrt{\frac{b_{eff,c,wc} d_{wc} f_{y,wc}}{E t_{wc}^2}}$$

$d_{wc} = h_c - 2(t_{fc} + s)$

k_{wc}: reduction factor for maximum coexisting longitudinal compression stress in the column web, conservatively taken as 0.7

Resistance of beam flange

Compression resistance of beam flange:

$$F_{c,fb,Rd} = \frac{M_{c,Rd}}{h - t_{fb}}$$

where

$M_{c,Rd}$: design bending resistance of beam cross section, can be calculated from SS EN1993-1-1

h: depth of beam

t_{fb}: thickness of beam flange

Column web in shear

If $d_c/t_{wc} \leq 69\varepsilon$, $V_{wp,Rd} = 0.9 f_{yc} A_{vc}/\gamma_{M0}\sqrt{3}$

If $d_c/t_{wc} > 69\varepsilon$, $V_{wp,Rd} = 0.9 V_{bw,Rd}$

where

d_c: clear depth of the column web

$d_c = h_c - 2(t_{fc} + s)$

s: root radius for rolled section; leg length of fillet weld for welded section;

A_{vc}: shear area of the column

$A_{vc} = A_c - 2b_c t_{fc} + (t_{wc} + 2r_c)t_{fc}$ (for rolled section)

$V_{bw,Rd}$: shear buckling resistance of column web, can be calculated from SS EN 1993-1-5 5.2 (1)

Compression zone resistance will be the minimum of the resistance calculated above.

<u>Moment resistance</u>

According to SS EN1993-1-8 6.2.7.2 (9), the effective resistance of the bolt row need not be reduced if the resistance of the individual bolt row is less than $1.9F_{t,Rd}$.

UK NA also states the limit for plastic distribution assumption:

$$t_p \text{ or } t_{fc} \leq \frac{d}{1.9}\sqrt{\frac{f_{ub}}{f_{y,fc}}}$$

Equilibrium of forces

The effective tension resistance of the bolt rows must be in equilibrium with the compression zone resistance. If compression resistance is greater than the effective tension resistance, no reduction is needed. When sum of effective tension resistance of bolt rows and axial load from beam exceeds the compression resistance, reduction of the effective tension resistance of bolt rows is needed. The reduction should start from the bottom row and working up progressively.

$\Sigma F_{ri} + N_{Ed} \leq F_{c,Rd}$

where

ΣF_{ri}: sum of forces in all of the rows of bolts in tension

N_{Ed}: axial force in the beam, positive for compression

$F_{c,Rd}$: resistance of compression zone, minimum resistance calculated from section (2b)

Moment resistance

Moment resistance of the connection:

$$M_{j,Rd} = \sum_{r} h_r F_{t,r,Rd}$$

where

h_r: distance from the center of compression to bolt row r

$F_{t,r,Rd}$: effective tension resistance of the bolt row r (after reduction)

<u>Shear resistance of bolt group</u>

Individual bolt resistances (shear and bearing) can be calculated using the same method as section 2.3.1. According to SCI_P398, it is conservative to assume that the bolt in tension zone can provide only 28% of the shear resistance.

Vertical shear resistance of bolt group:

$$V_{Rd} = (n_1 + 0.28 n_2) F_{Rd}$$

where

n_1: number of bolts without tension

n_2: number of bolts experience tension

F_{Rd}: shear resistance of individual bolt, minimum values of shear and bearing resistance

<u>Resistance of weld connecting beam flange to end plate (PPBW)</u>

Tensile resistance of the weld:

$$F_{t,Rd} = F_{w,T,Rd} b_b$$

where

$F_{w,T,Rd}$: transverse resistance of weld

$$F_{w,T,Rd} = \frac{K f_u a}{\sqrt{3} \beta_w \gamma_{M2}}$$

$$K = \sqrt{\frac{3}{1 + 2\cos^2\theta}}$$

θ: angle between applied force and axis of the weld

f_u: ultimate strength of weld

a: throat thickness of weld

β_w: 0.85 for S275; 0.9 for S355

$\gamma_{M2} = 1.25$

In addition to the above checking, the transverse stress needs to fulfill the follow requirement (SS EN1993-1-8 Clause 4.5.3.2(6)):

$$\tau_v \leq \frac{0.9 f_u}{\gamma_{M2}}$$

2.4.3 Example 9 – Double-sided Beam-to-Beam connection with extended fin-plate (moment-resisting connection) for beams of similar depth

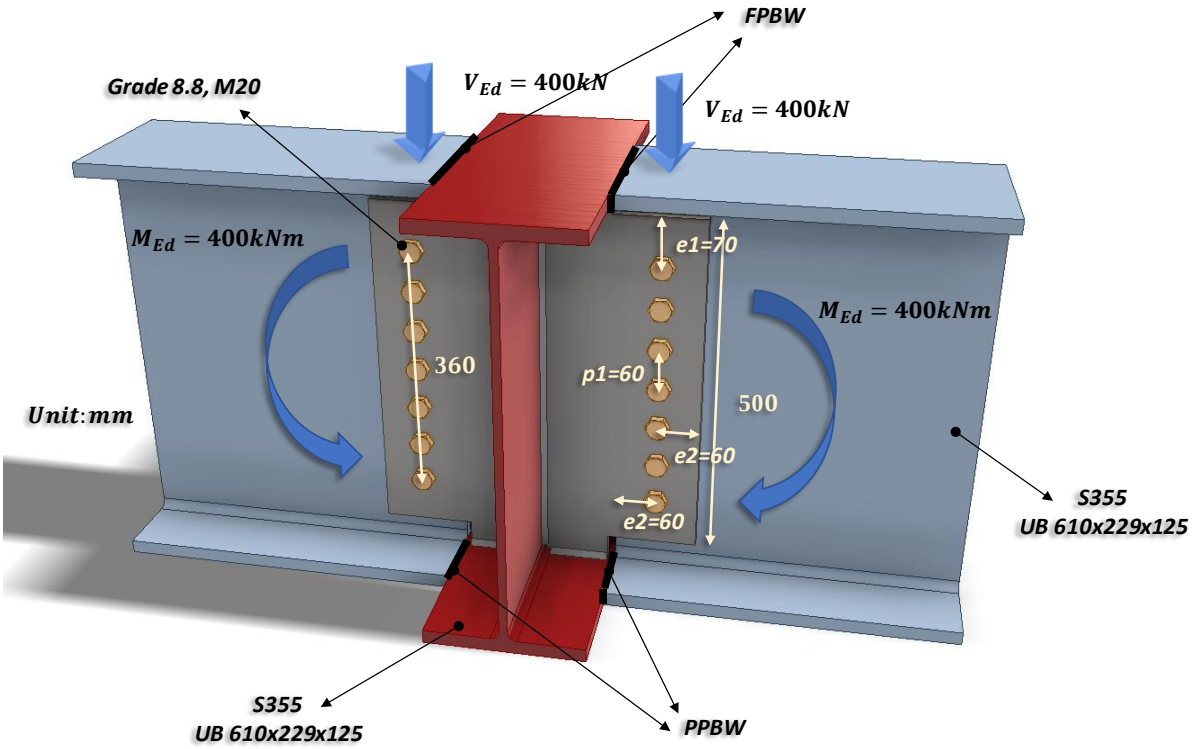

Check 1 – Bolt group resistance		
Ref	Calculations	Remark
	According to AISC Guide, for flange-plated moment connections, the shear-plate connection can be designed for shear only while the moment is considered resisted by the flange connections; Hence, in this case, all shear force is assumed to be resisted by the bolt groups while the butt welds in the beam flanges resists the moment. 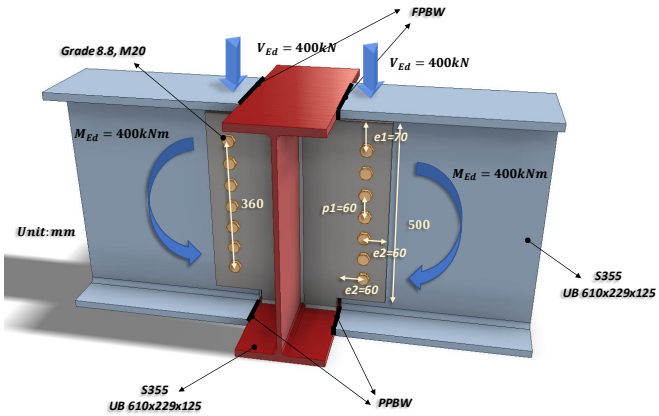 	
SS EN1993-1-8	**Bolt resistance:** Using Gr8.8, M20 bolts with: $A_s = 245mm^2; f_{ub} = 800MPa;$ As the distance between the centres of the end fasters: $L_j = 360mm > 15d = 300mm$ ∴Reduction factor to cater long joints effect is applied $\beta_{Lj} = \left(1 - \frac{L_j - 15d}{200d}\right)$ $= \left(1 - \frac{360 - 15 \times 20}{200 \times 20}\right)$ $= 0.985$	

Check 1 – Bolt group resistance		
Ref	Calculations	Remark
	Shear resistance of a single bolt: $F_{v,Rd} = \frac{\alpha_v f_{ub} A_s}{\gamma_{M2}} \beta_{Lj}$ $= \frac{0.6 \times 800 \times 245}{1.25} \times 0.985 \times 10^{-3}$ $= 92.67kN$	For class 8.8: $\alpha_v = 0.6$ $\gamma_{M2} = 1.25$ (refer to NA to SS)
SCI_P358 SN017	For single vertical line of bolts ($n_2 = 1$): $n_1 = 7, n = 7 \times 1 = 7$ $\alpha = 0$ $\beta = \frac{6z}{n_1(n_1+1)p_1}$ $= \frac{6 \times 80mm}{7 \times (7+1) \times 60mm}$ $= 0.14$ $V_{Rd} = \frac{nF_{V,Rd}}{\sqrt{(1+\alpha n)^2 + (\beta n)^2}}$ $= \frac{7 \times 92.67}{\sqrt{(1+0)^2 + (0.14 \times 7)^2}} \times 10^{-3}$ $= 458.69kN > V_{Ed} = 400kN$	$z = 80.00mm$ OK
SCI_P358	**Bearing resistance on fin plate:** For bearing resistance in vertical direction of one bolt: $\alpha_b = \min\left(\frac{e_1}{3d_0}; \frac{p_1}{3d_0} - \frac{1}{4}; \frac{f_{ub}}{f_u}; 1.0\right)$ $= \min\left(\frac{70}{3 \times 22}; \frac{60}{3 \times 22} - \frac{1}{4}; \frac{800}{490}; 1.0\right)$ $= 0.66$	$\boldsymbol{e_1 = 70.0mm}$ $(1.2d_0 < e_1 < 4t + 40mm)$ $\boldsymbol{p_1 = 60.0mm}$ $(2.2d_0 < p_1 < 14t\ or\ 200mm)$ $\boldsymbol{e_2 = 60.0mm}$ $(1.2d_0 < e_2 < 4t + 40mm)$ $\boldsymbol{p_2 = nil}$ $(2.4d_0 < p_2 < 14t\ or\ 200mm)$

Check 1 – Bolt group resistance		
Ref	Calculations	Remark
	$k_1 = \min\left(\frac{2.8e_2}{d_0} - 1.7; \frac{1.4p_2}{d_0} - 1.7; 2.5\right)$ $= \min\left(\frac{2.8 \times 60}{22} - 1.7; 2.5\right)$ $= 2.50$ $F_{b,ver,Rd} = \frac{k_1 \alpha_b f_{u,p} d t_p}{\gamma_{M2}}$ $= \frac{2.5 \times 0.66 \times 490 \times 20 \times 15}{1.25} \times 10^{-3}$ $= 193.77kN$ For bearing resistance in horizontal direction of one bolt: $k_1 = \min\left(\frac{2.8e_1}{d_o} - 1.7; \frac{1.4p_1}{d_0} - 1.7; 2.5\right)$ $= \min\left(\frac{2.8 \times 70}{22} - 1.7; \frac{1.4 \times 60}{22} - 1.7; 2.5\right)$ $= 2.12$ $\alpha_b = \min\left(\frac{e_2}{3d_0}; \frac{p_2}{3d_0} - \frac{1}{4}; \frac{f_{ub}}{f_{u,p}}; 1.0\right)$ $= \min\left(\frac{60}{3 \times 22}; \frac{800}{490}; 1.0\right)$ $= 0.91$ $F_{b,hor,Rd} = \frac{k_1 \alpha_b f_{u,p} d t_p}{\gamma_{M2}}$ $= \frac{2.12 \times 0.91 \times 490 \times 20 \times 15}{1.25} \times 10^{-3}$ $= 226.45$kN	$t_p = 15.0mm$ $t_{tab} < 16mm$ $f_{u,p} = 490MPa$ $f_{y,p} = 355MPa$

Check 1 – Bolt group resistance		
Ref	Calculations	Remark
	Bolt group bearing resistance: $V_{Rd} = \dfrac{n}{\sqrt{\left(\dfrac{1+\alpha n}{F_{b,ver,Rd}}\right)^2 + \left(\dfrac{\beta n}{F_{b,hor,Rd}}\right)^2}}$ $= \dfrac{7}{\sqrt{\left(\dfrac{1}{193.77}\right)^2 + \left(\dfrac{0.14 \times 7}{226.45}\right)^2}} \times 10^{-3}$ $= 1030.60kN > V_{Ed} = 400kN$	OK
	Bearing resistance on beam web: Vertical bearing resistance: $\alpha_b = \min\left(\dfrac{e_{1,b}}{3d_0}; \dfrac{p_{1,b}}{3d_0} - \dfrac{1}{4}; \dfrac{f_{ub}}{f_{u,b}}; 1.0\right)$ $= \min\left(\dfrac{126.1}{3 \times 22}; \dfrac{60}{3 \times 22} - \dfrac{1}{4}; \dfrac{800}{490}; 1.0\right)$ $= 0.66$ $k_1 = \min\left(\dfrac{2.8e_{2,b}}{d_0} - 1.7; 2.5\right)$ $= \min\left(\dfrac{2.8 \times 60}{22} - 1.7; 2.5\right)$ $= 2.50$ $F_{b,Rd,p} = \dfrac{k_1 \alpha_b f_{u,b} d t_{w,b1}}{\gamma_{M2}}$ $= \dfrac{2.5 \times 0.6591 \times 490 \times 20 \times 11.9}{1.25}$ $= 153.73kN$	$\boldsymbol{e_{1,b} = 126.1mm}$ $\boldsymbol{p_{1,b} = 60.0mm}$ $\boldsymbol{e_{2,b} = 60.0mm}$ $\boldsymbol{p_{2,b} = nil}$ $t_{w,b1} = 11.9mm$ $t_{w,b1} < 16mm$ $f_{u,b} = 490MPa$ $f_{y,b} = 355MPa$
	Horizontal bearing resistance: $k_1 = \min\left(\dfrac{2.8e_{1,b}}{d_o} - 1.7; \dfrac{1.4p_1}{d_0} - 1.7; 2.5\right)$ $= \min\left(\dfrac{2.8 \times 126.1}{22} - 1.7; \dfrac{1.4 \times 60}{22} - 1.7; 2.5\right)$ $= 2.12$	

Check 1 – Bolt group resistance		
Ref	Calculations	Remark
	$\alpha_b = \min\left(\frac{e_{2,b}}{3d_0}; \frac{p_2}{3d_0} - \frac{1}{4}; \frac{f_{ub}}{f_{u,b1}}; 1.0\right)$ $= \min\left(\frac{60}{3 \times 22}; \frac{800}{490}; 1.0\right)$ $= 0.91$ $F_{b,hor,Rd} = \frac{k_1 \alpha_b f_{u,b1} d t_{w,b1}}{\gamma_{M2}}$ $= \frac{2.12 \times 0.91 \times 490 \times 20 \times 11.9}{1.25} \times 10^{-3}$ $= 179.65kN$ **Bolt group bearing resistance:** $V_{Rd} = \frac{n}{\sqrt{\left(\frac{1+\alpha n}{F_{b,ver,Rd}}\right)^2 + \left(\frac{\beta n}{F_{b,hor,Rd}}\right)^2}}$ $= \frac{7}{\sqrt{\left(\frac{1}{153.73}\right)^2 + \left(\frac{0.14 \times 7}{179.65}\right)^2}}$ $= 817.61kN > V_{Ed} = 400kN$	OK

Note:

The construction sequence is important for flange-plated moment connection. If the joints are slip critical, friction grip bolts shall be used. In such case, the bolts shall be torqued after the welding is done.

Check 2 – Fin plate shear resistance		
Ref	Calculations	Remark
SS EN1993 SCI_P358	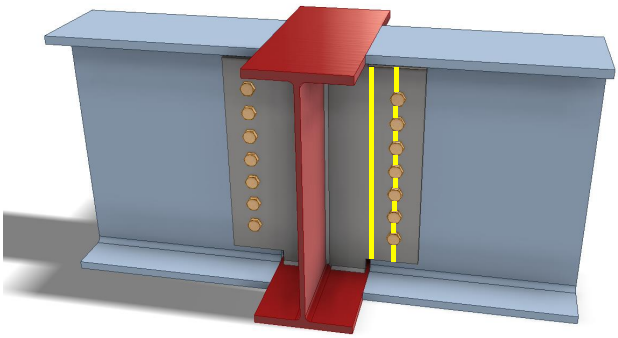 **Fin plate shear gross section resistance:** $V_{Rd,g} = \frac{h_p t_p}{1.27} \frac{f_{y,p}}{\sqrt{3}\gamma_{M0}}$ $= \frac{500 \times 15}{1.27} \times \frac{355}{\sqrt{3}} \times 10^{-3}$ $= 1210.39kN$ **Fin plate shear net section resistance:** Net area: $A_{net} = (h_p - nd_0)t_p$ $= (500 - 7 \times 22) \times 15$ $= 5190mm^2$ $V_{Rd,n} = \frac{A_{net} f_{u,p}}{\sqrt{3}\gamma_{M2}}$ $= \frac{5190 \times 490}{\sqrt{3} \times 1.25} \times 10^{-3}$ $= 1174.61kN$	$h_p = 500.0mm$ $\gamma_{M0} = 1.0$ (SS EN1993-1-1)

Check 2 – Fin plate shear resistance		
Ref	Calculations	Remark
	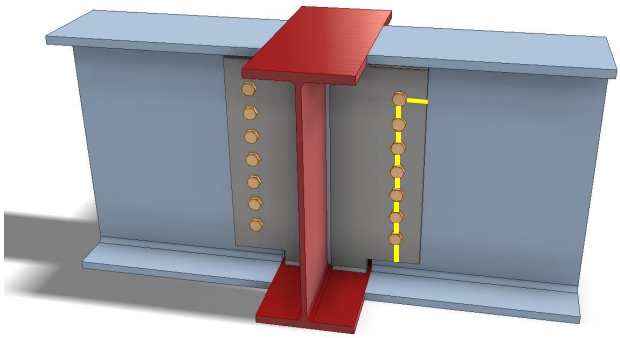 **Fin plate shear block shear resistance:** Net area subject to tension: $A_{nt} = (e_2 - 0.5d_0)t_p$ $= (60 - 0.5 \times 22) \times 15$ $= 735mm^2$ Net area subject to shear: $A_{nv} = (e_1 + (n-1)P_1 - (n-0.5)d_0)t_p$ $= (70 + 6 \times 60 - 6.5 \times 22) \times 15$ $= 4305mm^2$ $V_{Rd,b} = \frac{0.5f_{u,p}A_{nt}}{\gamma_{M2}} + \frac{f_{y,p}A_{nv}}{\sqrt{3}\gamma_{M0}}$ $= \left(\frac{0.5 \times 490 \times 735}{1.25} + \frac{355 \times 4305}{\sqrt{3}}\right) \times 10^{-3}$ $= 1026.41kN$ **Shear resistance of fin plate:** $V_{Rd} = \min(V_{Rd,g}, V_{Rd,n}, V_{Rd,b})$ $= \min(1210.39, 1174.61, 1026.41)$ $= 1026.41kN > V_{Ed} = 400kN$	OK

Check 3 – Secondary beam web shear resistance		
Ref	Calculations	Remark
SS EN1993 SCI_P358	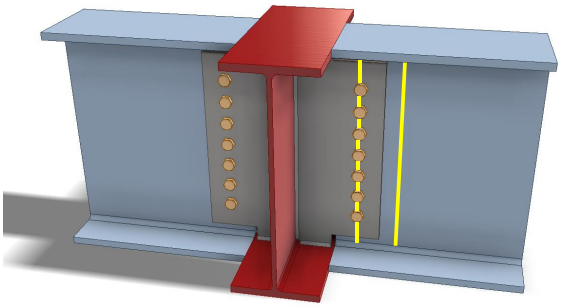 **Beam web gross section resistance:** For UB610x229x125: Cross-section area, $A_g = 15900mm^2$ Flange width, $b_f = 229mm$ Flange thickness, $t_f = 19.6mm$ Root radius, $r = 12.7mm$ Shear area: $A_v = A_g - 2t_f b_f + (t_w + 2r)t_f$ $= 15900 - 2 \times 19.6 \times 229 + (11.9 + 2 \times 12.7) \times 19.6$ $= 7654.28mm^2$ $V_{Rd,g} = \frac{A_v f_{y,b1}}{\sqrt{3}\gamma_{M0}}$ $= \frac{7654.28 \times 355}{\sqrt{3}} \times 10^{-3}$ $= 1568.82kN$ **Beam web net section resistance:** Area of net section: $A_{net} = A_v - nd_0 t_{w,b}$ $= 7654.28 - 7 \times 22 \times 11.9$ $= 5821.68mm^2$ $V_{Rd,n} = \frac{A_{v,net} f_{u,b}}{\sqrt{3}\gamma_{M2}}$ $= \frac{5281.68 \times 490}{\sqrt{3} \times 1.25} \times 10^{-3}$ $= 1646.96kN$	

Check 3 – Secondary beam web shear resistance		
Ref	Calculations	Remark
	Shear resistance of fin plate: $V_{Rd} = \min\left(V_{Rd,g}, V_{Rd,n},\right)$ $= \min(1568.82, 1646.96)$ $= 1568.82kN > V_{Ed} = 400kN$ For **short fin plate**, **shear and bending moment interaction check** is not necessary for beam web.	OK

Check 4 – Weld group resistance of fin plate (Two-side C shape fillet weld)		
Ref	Calculations	Remark
	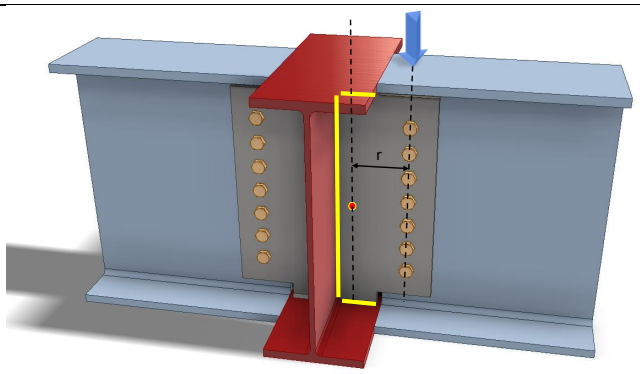	
SS EN1993-1-8	Location of center of gravity of welds group: $\bar{x} = \frac{b^2}{(2b + d)}$ $= \frac{88.55^2}{(2 \times 88.55 + 573)}$ $= 10.45mm$ $\bar{y} = \frac{d}{2}$ $= \frac{573}{2}$ $= 286.5mm$ Unit throat area: $A_u = 2b' + d'$ $= 2 \times 73.55 + 543$ $= 690.1mm$ Moment arm between applied force and weld center: $r = 162.62mm$ Induced moment on welds: $M = \frac{V_{Ed}}{2} r$ $= \frac{400}{2} \times 162.62$ $= 32524kNmm$	Length of fillet weld: Width: $b = 88.55mm$ Depth: $d = 573mm$ Cope hole size: $n = 15mm$ $b' = b - n$ $= 88.55 - 15$ $= 73.55mm$ $d' = d - 2n$ $= 573 - 2 \times 15$ $= 543mm$

Check 4 – Weld group resistance of fin plate (Two-side C shape fillet weld)		
Ref	Calculations	Remark
	Polar moment of inertia: $J = \frac{8b'^3 + 6b'd'^2 + d'^3}{12} - \frac{b'^4}{2b' + d'}$ $= \frac{8 \times 73.55^3 + 6 \times 73.55 \times 543^2 + 543^3}{12}$ $- \frac{73.55^4}{2 \times 73.55 + 543}$ $= 24407835mm^3$ **Critical point:** Horizontal distance from centroid: $r_{zh} = b - \bar{x}$ $= 88.55 - 10.45$ $= 78.10mm$ Vertical distance from centroid: $r_{zv} = \bar{y}$ $= 286.5mm$ Vertical stress: $\tau_v = \frac{V_{Ed}}{A_u} + \frac{Mr_{zh}}{J}$ $= \frac{400}{2 \times 690.1} + \frac{324524 \times 78.10}{24407835}$ $= 0.39kN/mm$ Horizontal stress: $\tau_h = \frac{Mr_{zv}}{J}$ $= \frac{324524 \times 286.5}{24407835}$ $= 0.38kN/mm$ Resultant stress: $\tau_r = \sqrt{r_v^2 + r_h^2}$ $= \sqrt{0.39^2 + 0.38^2}$ $= 0.55kN/mm$	

Check 4 – Weld group resistance of fin plate (Two-side C shape fillet weld)		
Ref	Calculations	Remark
SCI_P363	Choose fillet weld with 6mm leg length, 4.2mm throat thickness and grade S355 which match beam steel grade: Longitudinal resistance: $F_{w,L,Rd} = 1.01kN/mm$ Transverse resistance: $F_{w,T,Rd} = 1.24kN/mm$ **Simplified method:** $F_{w,L,Rd} = 1.01kN/mm > \tau_r = 0.55kN/mm$ **Directional method:** $SF = \left(\frac{\tau_v}{F_{w,L,Rd}}\right)^2 + \left(\frac{\tau_h}{F_{w,T,Rd}}\right)^2$ $= \left(\frac{0.40}{1.01}\right)^2 + \left(\frac{0.38}{1.24}\right)^2$ $= 0.25 < 1.0$	 OK OK

Check 5 – Weld resistance of beam flange		
Ref	Calculations	Remark
	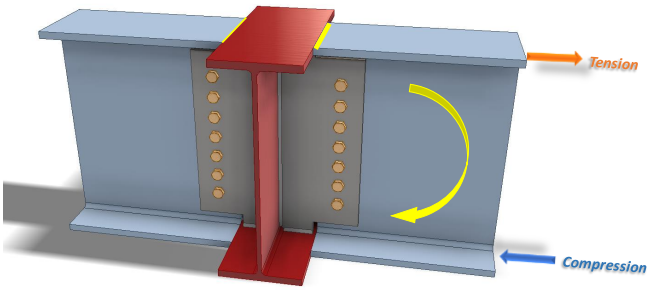	
SS EN1993	Assume that the moment is resisted by the flanges of the secondary beam, and the flange thicknesses of primary and secondary beam are same. **The beam flange tensile resistance:** $F_{Rd,flange} = \frac{t_f b_f f_{y,bf}}{\gamma_{M0}}$ $= \frac{19.6 \times 229 \times 345}{1.0} \times 10^{-3}$ $= 1548.5kN$ Moment arm: $r = h_b - t_{f,b}$ $= 612.2 - 19.6$ $= 592.6mm$ Tensile force on flange: $F_{Ed} = \frac{M_{Ed}}{r}$ $= \frac{400}{592.6} \times 10^3$ $= 674.99kN < F_{Rd,flange} = 1548.5kN$	
BS 5950-1 6.9.2	**Partial penetration butt weld resistance:** The minimum throat size of a longitudinal partial penetration butt weld should be $2\sqrt{t}$ (in mm), where t is the thickness of the thinner part of joint.	
SS EN1993-1-8 4.7.2 (1)	The design resistance of a partial penetration butt weld should be determined using the method for a deep penetration fillet weld.	

Check 5 – Weld resistance of beam flange		
Ref	Calculations	Remark
	In this example, the angle between the transverse force and weld throat $\theta = 90°$. Provided the groove angle is greater than 60° or U-butt is adopted, the throat thickness is equal to the depth of penetration. 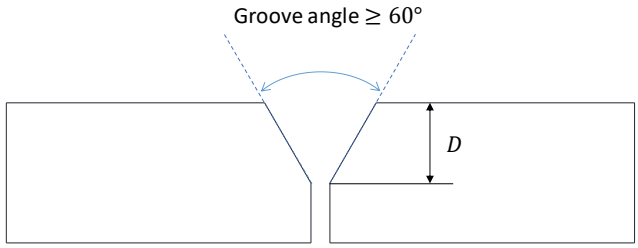 Choose partial butt weld with 12mm ($> 2\sqrt{19.6} = 8.85mm$) throat thickness and grade S355 which match the beam material properties: Transverse resistance: $F_{w,T,Rd} = \frac{0.9f_u}{\gamma_{M2}} a$ $= 0.9 \times 470 \times \frac{12}{1.25} \times 10^{-3}$ $= 4.06kN/mm$ Tensile resistance of the PPBW: $F_{Rd} = F_{w,T,Rd} b_f$ $= 4.06 \times 229$ $= 929.92kN > F_{Ed} = 674.99kN$	f_u: ultimate strength $= 410MPa$ for S275 $= 470MPa$ for S355 a: throat thickness $\gamma_{M2} = 1.25$ OK

2.4.4 Example 10 – Double-sided Beam-to-Beam connection with extended fin-plate (moment-resisting connection) for beams of different depths with haunch

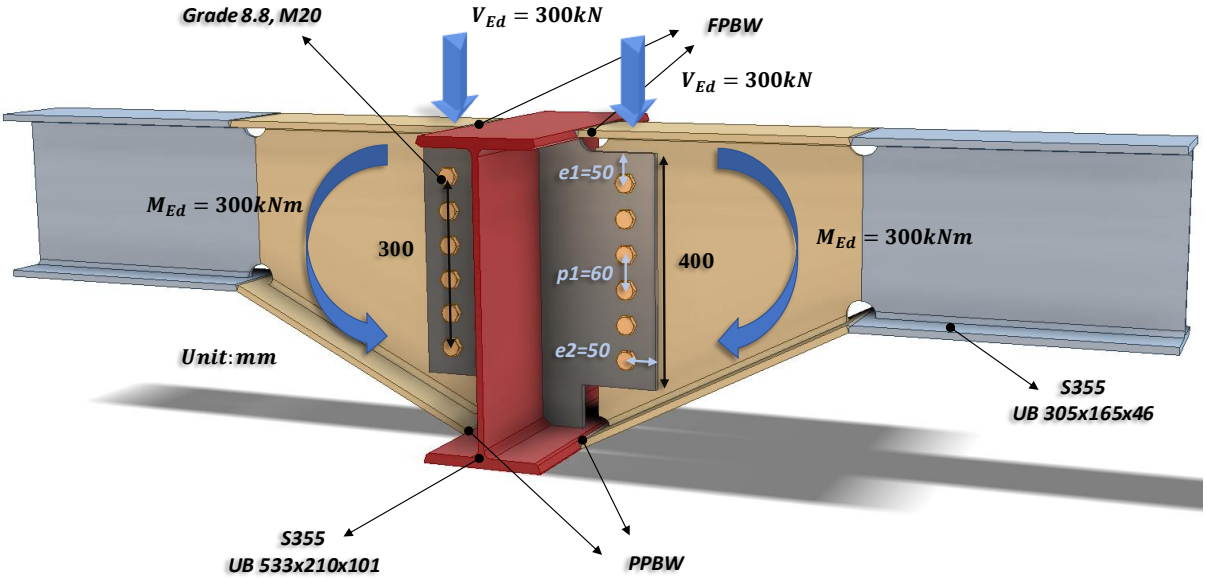

Check 1 – Bolt group resistance		
Ref	Calculations	Remark
	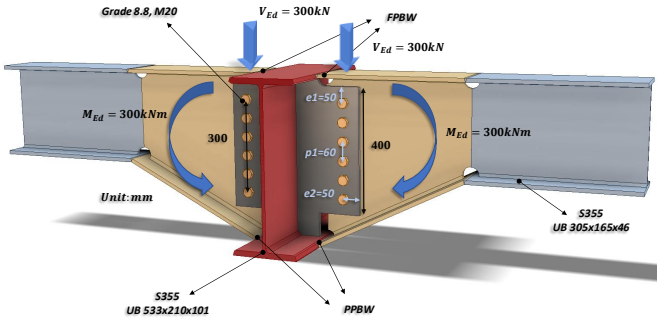	
SS EN1993-1-8	**Bolt resistance:** Using Gr8.8, M20 bolts with: $A_s = 245mm^2; f_{ub} = 800MPa;$ As the distance between the centres of the end fasters: $L_j = 300mm = 15d = 300mm$ ∴Reduction factor to cater long joints effect is not necessary $\beta_{Lj} = \left(1 - \frac{L_j - 15d}{200d}\right)$ $= \left(1 - \frac{300 - 15 \times 20}{200 \times 20}\right)$ $= 1.0$	
	Shear resistance of a single bolt: $F_{v,Rd} = \frac{\alpha_v f_{ub} A_s}{\gamma_{M2}}$ $= \frac{0.6 \times 800 \times 245}{1.25} \times 10^{-3}$ $= 94.08kN$	For class 8.8: $\alpha_v = 0.6$ $\gamma_{M2} = 1.25$ (refer to NA to SS)
	For single vertical line of bolts ($n_2 = 1$): $n_1 = 6, n = 6 \times 1 = 6$ $\alpha = 0$	$z = 75.00mm$

Check 1 – Bolt group resistance		
Ref	Calculations	Remark
	$\beta = \frac{6z}{n_1(n_1+1)p_1}$ $= \frac{6 \times 75mm}{6 \times (6+1) \times 60mm}$ $= 0.18$ $V_{Rd} = \frac{nF_{V,Rd}}{\sqrt{(1+\alpha n)^2 + (\beta n)^2}}$ $= \frac{6 \times 94.08}{\sqrt{(1+0)^2 + (0.18 \times 6)^2}} \times 10^{-3}$ $= 385.16kN > V_{Ed} = 300kN$	OK
	Bearing resistance on fin plate: For bearing resistance in vertical direction of one bolt: $\alpha_b = \min\left(\frac{e_1}{3d_0}; \frac{p_1}{3d_0} - \frac{1}{4}; \frac{f_{ub}}{f_u}; 1.0\right)$ $= \min\left(\frac{50}{3 \times 22}; \frac{60}{3 \times 22} - \frac{1}{4}; \frac{800}{490}; 1.0\right)$ $= 0.66$ $k_1 = \min\left(\frac{2.8e_2}{d_0} - 1.7; \frac{1.4p_2}{d_0} - 1.7; 2.5\right)$ $= \min\left(\frac{2.8 \times 50}{22} - 1.7; 2.5\right)$ $= 2.5$ $F_{b,ver,Rd} = \frac{k_1 \alpha_b f_{u,p} d t_p}{\gamma_{M2}}$ $= \frac{2.5 \times 0.66 \times 490 \times 20 \times 12}{1.25}$ $= 155.02kN$	$\boldsymbol{e_1 = 50.0mm}$ $(1.2d_0 < e_1 < 4t + 40mm)$ $\boldsymbol{p_1 = 60.0mm}$ $(2.2d_0 < p_1 < 14t\ or\ 200mm)$ $\boldsymbol{e_2 = 50.0mm}$ $(1.2d_0 < e_2 < 4t + 40mm)$ $\boldsymbol{p_2 = nil}$ $(2.4d_0 < p_2 < 14t\ or\ 200mm)$ $t_p = 12.0mm$ $t_{tab} < 16mm$ $f_{u,p} = 490MPa$ $f_{y,p} = 355MPa$

Check 1 – Bolt group resistance		
Ref	Calculations	Remark
	For bearing resistance in horizontal direction of one bolt: $k_1 = \min\left(\frac{2.8e_1}{d_o} - 1.7; \frac{1.4p_1}{d_0} - 1.7; 2.5\right)$ $= \min\left(\frac{2.8 \times 50}{22} - 1.7; \frac{1.4 \times 60}{22} - 1.7; 2.5\right)$ $= 2.12$ $\alpha_b = \min\left(\frac{e_2}{3d_0}; \frac{p_2}{3d_0} - \frac{1}{4}; \frac{f_{ub}}{f_{u,p}}; 1.0\right)$ $= \min\left(\frac{50}{3 \times 22}; \frac{800}{490}; 1.0\right)$ $= 0.76$ $F_{b,hor,Rd} = \frac{k_1 \alpha_b f_{u,p} d t_p}{\gamma_{M2}}$ $= \frac{2.5 \times 0.76 \times 490 \times 20 \times 12}{1.25} \times 10^{-3}$ $= 150.97\text{kN}$ **Bolt group bearing resistance:** $V_{Rd} = \frac{n}{\sqrt{\left(\frac{1+\alpha n}{F_{b,ver,Rd}}\right)^2 + \left(\frac{\beta n}{F_{b,hor,Rd}}\right)^2}}$ $= \frac{6}{\sqrt{\left(\frac{1}{155.02}\right)^2 + \left(\frac{0.16 \times 6}{150.97}\right)^2}} \times 10^{-3}$ $= 625.61kN > V_{Ed} = 300kN$	OK
	Bearing resistance on beam web: Vertical bearing resistance: $\alpha_b = \min\left(\frac{e_{1,b}}{3d_0}; \frac{p_{1,b}}{3d_0} - \frac{1}{4}; \frac{f_{ub}}{f_{u,b}}; 1.0\right)$ $= \min\left(\frac{90.85}{3 \times 22}; \frac{66}{3 \times 22} - \frac{1}{4}; \frac{800}{490}; 1.0\right)$ $= 0.75$	$\boldsymbol{e_{1,b} = 90.85mm}$ $\boldsymbol{p_{1,b} = 66.0mm}$ $\boldsymbol{e_{2,b} = 50.0mm}$ $\boldsymbol{p_{2,b} = nil}$ $t_{w,b1} = 6.7mm$ $t_{w,b1} < 16mm$ $f_{u,b} = 490MPa$ $f_{y,b} = 355MPa$

Check 1 – Bolt group resistance		
Ref	Calculations	Remark
	$k_1 = \min\left(\frac{2.8e_{2,b}}{d_0} - 1.7; 2.5\right)$ $= \min\left(\frac{2.8 \times 50}{22} - 1.7; 2.5\right)$ $= 2.5$ $F_{b,ver,Rd} = \frac{k_1 \alpha_b f_{u,b} d t_{w,b1}}{\gamma_{M2}}$ $= \frac{2.5 \times 0.75 \times 490 \times 20 \times 6.7}{1.25}$ $= 98.49kN$ Horizontal bearing resistance: $k_1 = \min\left(\frac{2.8e_{1,b}}{d_o} - 1.7; \frac{1.4p_1}{d_0} - 1.7; 2.5\right)$ $= \min\left(\frac{2.8 \times 90.85}{22} - 1.7; \frac{1.4 \times 66}{22} - 1.7; 2.5\right)$ $= 2.5$ $\alpha_b = \min\left(\frac{e_{2,b}}{3d_0}; \frac{p_2}{3d_0} - \frac{1}{4}; \frac{f_{ub}}{f_{u,b1}}; 1.0\right)$ $= \min\left(\frac{50}{3 \times 22}; \frac{800}{490}; 1.0\right)$ $= 0.76$ $F_{b,hor,Rd} = \frac{k_1 \alpha_b f_{u,b1} d t_{w,b1}}{\gamma_{M2}}$ $= \frac{2.5 \times 0.76 \times 490 \times 20 \times 6.7}{1.25} \times 10^{-3}$ $= 99.48kN$	

Check 1 – Bolt group resistance		
Ref	Calculations	Remark
	Bolt group bearing resistance: $V_{Rd} = \frac{n}{\sqrt{\left(\frac{1+\alpha n}{F_{b,ver,Rd}}\right)^2 + \left(\frac{\beta n}{F_{b,hor,Rd}}\right)^2}}$ $= \frac{6}{\sqrt{\left(\frac{1}{98.49}\right)^2 + \left(\frac{0.16 \times 6}{99.48}\right)^2}} \times 10^{-3}$ $= 425.38kN > V_{Ed} = 300kN$	OK

Check 2 – Fin Plate shear resistance		
Ref	Calculations	Remark
SS EN1993 SCI_P358	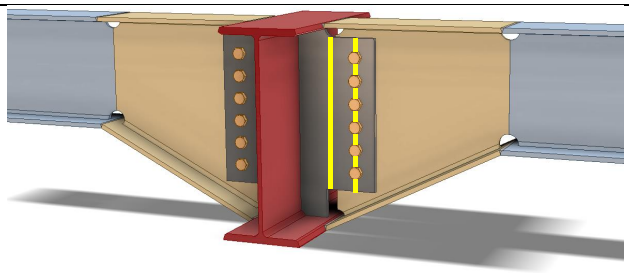 **Fin plate shear (gross section) resistance:** $V_{Rd,g} = \frac{h_p t_p}{1.27} \frac{f_{y,p}}{\sqrt{3}\gamma_{M0}}$ $= \frac{400 \times 12}{1.27} \times \frac{355}{\sqrt{3}} \times 10^{-3}$ $= 774.65kN$ **Fin plate shear (net section) resistance:** Net area: $A_{net} = (h_p - nd_0)t_p$ $= (400 - 6 \times 22) \times 12$ $= 3216mm^2$ $V_{Rd,n} = \frac{A_{net} f_{u,p}}{\sqrt{3}\gamma_{M2}}$ $= \frac{3216 \times 490}{\sqrt{3} \times 1.25} \times 10^{-3}$ $= 727.85kN$ 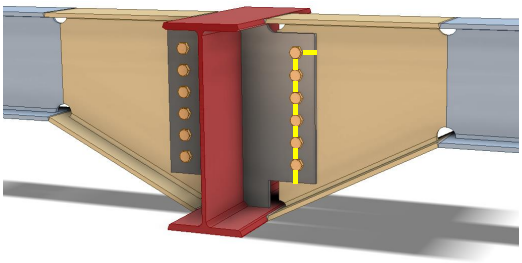 **Fin plate shear (block shear) resistance:** Net area subject to tension: $A_{nt} = (e_2 - 0.5d_0)t_p$ $= (50 - 0.5 \times 22) \times 12$ $= 468mm^2$	$h_p = 400.0mm$ $\gamma_{M0} = 1.0$ (SS EN1993-1-1)

Check 2 – Fin Plate shear resistance		
Ref	Calculations	Remark
	Net area subject to shear: $A_{nv} = (e_1 + (n-1)P_1 - (n-0.5)d_0)t_p$ $= (50 + 5 \times 60 - 5.5 \times 22) \times 12$ $= 2748mm^2$ $V_{Rd,b} = \frac{0.5 f_{u,p} A_{nt}}{\gamma_{M2}} + \frac{f_{y,p} A_{nv}}{\sqrt{3}\gamma_{M0}}$ $= \left(\frac{0.5 \times 490 \times 468}{1.25} + \frac{355 \times 2748}{\sqrt{3}}\right) \times 10^{-3}$ $= 654.96kN$ **Shear resistance of fin plate:** $V_{Rd} = \min(V_{Rd,g}, V_{Rd,n}, V_{Rd,b})$ $= \min(774.65, 727.85, 654.96)$ $= 654.96kN > V_{Ed} = 300kN$	OK

Check 3 – Secondary beam web shear resistance		
Ref	Calculations	Remark
SS EN1993 SCI_P358	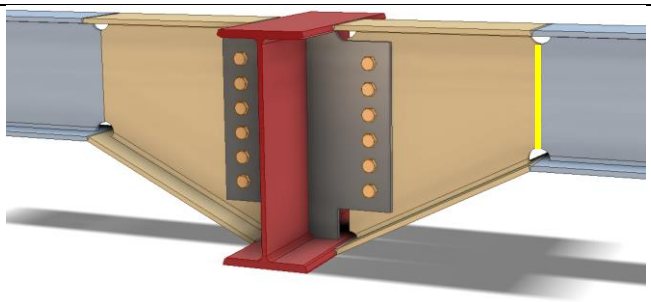 Shear area of secondary beam: $A_v = A_g - 2t_f b_f - 2r_w t_w$ $= 5870 - 2 \times 11.8 \times 165.7 - 2 \times 25 \times 6.7$ $= 1624.48mm^2$ $V_{Rd} = \frac{A_v f_{y,b}}{\sqrt{3}\gamma_{M0}}$ $= \frac{1624.48 \times 355}{\sqrt{3}} \times 10^{-3}$ $= 332.95kN > V_{Ed} = 300kN$	Weld access hole: $r_w = 25mm$ For UB305x165x46 $A_g = 5870mm^2$ $b_f = 165.7mm$ $t_f = 11.8mm$ OK

Check 4 – Haunch resistance		
Ref	Calculations	Remark
SCI_P358 SS EN1993	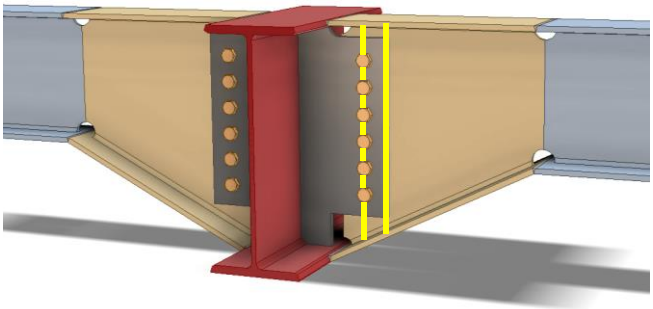 **Haunch shear resistance:** In order to reduce stress concentration, the thicknesses of flange and web are same as secondary beam UB305x165x46. Gross section: $V_{Rd,g} = \frac{h_h t_w f_{y,w}}{\sqrt{3}\gamma_{M0}}$ $= \frac{488.1 \times 6.7 \times 355}{\sqrt{3}} \times 10^{-3}$ $= 670.27kN$ Net section: Net shear area: $A_{v,net} = h_h t_w - nd_0 t_w$ $= 488.1 \times 6.7 - 6 \times 22 \times 6.7$ $= 2385.87mm^2$ $V_{Rd,n} = \frac{A_{v,net} f_{u,p}}{\sqrt{3}\gamma_{M2}}$ $= \frac{2385.87 \times 490}{\sqrt{3} \times 1.25} \times 10^{-3}$ $= 539.97kN$	$h_h = 488.1mm$ (Depth of haunch at bolt line) $\gamma_{M0} = 1.0$ (SS EN1993-1-1)

Check 4 – Haunch resistance		
Ref	Calculations	Remark
SCI_P358	**Shear resistance of haunch web:** $V_{Rd} = \min(V_{Rd,g}, V_{Rd,n})$ $= \min(670.27, 539.97)$ $= 539.97kN > V_{Ed} = 300kN$ For **short fin plate**, **shear and bending moment interaction check** is not necessary for haunch web. 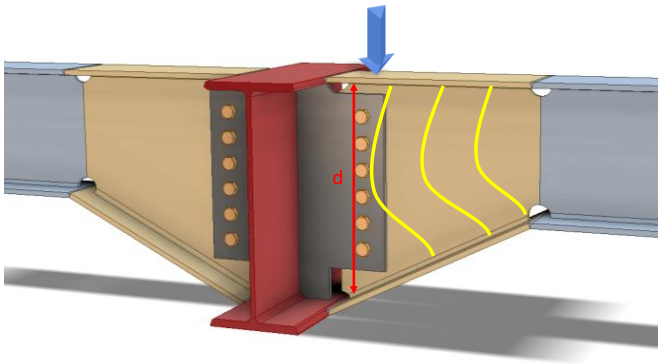 	OK
SS EN1993-1-5	**Shear buckling resistance of haunch web:** To check the shear buckling resistance of the haunch web, the largest height of the haunch was taken as the depth for calculation. The haunch was checked using similar method of checking rectangular girder. $\frac{72\varepsilon}{\eta} = \frac{72(0.8136)}{1.0} = 58.58$ $\frac{d}{t_w} = \frac{513.1}{6.7} = 76.58 > \frac{72\varepsilon}{\eta}$ ∴ The haunch web is susceptible to **shear buckling**, shear buckling check need to be performed and transverse stiffeners should be provided at the supports.	Depth of web: $d = 513.1mm$ $\varepsilon = \sqrt{235/f_{yw}}$ $= \sqrt{235/355}$ $= 0.8136$

Check 4 – Haunch resistance		
Ref	Calculations	Remark
	Maximum allowable slenderness for web: $\frac{kE}{F_{yf}}\sqrt{\frac{A_w}{A_{fc}}} = 0.55 \times \frac{210}{355}\sqrt{\frac{3437.77}{1955.26}} \times 10^3$ $= 431.41 > \frac{d}{t_w} = 76.58$ ∴ The maximum allowable slenderness of web check is satisfied. **Shear buckling resistance:** Assume transverse stiffeners are present at supports only: $\bar{\lambda}_w = \frac{d}{86.4 t_w \varepsilon_w}$ $= \frac{513.1}{86.4 \times 6.7 \times 0.8136}$ $= 1.09 > 1.08$ Assume non-rigid end post: $\chi_w = \frac{0.83}{\bar{\lambda}_w}$ $= \frac{0.83}{1.09}$ $= 0.76$ Contribution from the web: $V_{bw,Rd} = \frac{\chi_w f_{yw} d t_w}{\sqrt{3}\gamma_{M1}}$ $= \frac{0.76 \times 355 \times 513.1 \times 6.7}{\sqrt{3}}$ $= 536.82kN$	For elastic moment resistance utilized: $k = 0.55$ Cross section area of the compression flange: $A_{fc} = t_f b_f$ $= 1955.26mm^2$ Cross section area of web: $A_w = dt_w$ $= 3437.77mm^2$ Young's modules: $E = 210GPa$

Check 4 – Haunch resistance		
Ref	Calculations	Remark
	$M_{f,Rd} = \frac{f_{yf}(bt_f)(h-t_f)}{\gamma_{M0}}$ $= \frac{355 \times 165.7 \times 11.8 \times (536.7 - 11.8)}{1.0}$ $= 364.34kNm$ $c = a\left(0.25 + \frac{1.6bt_f^2 f_{yf}}{t_w d^2 f_{yw}}\right)$ $= 460.2 \times \left(0.25 + \frac{1.6 \times 165.7 \times 11.8^2 \times 355}{6.7 \times 513.1^2 \times 355}\right)$ $= 115.87mm$ Contribution from the flange: $V_{bf,Rd} = \frac{bt_f^2 f_{yf}}{c\gamma_{M1}}\left(1 - \left(\frac{M_{Ed}}{M_{f,Rd}}\right)^2\right)$ $= \frac{165.7 \times 11.8^2 \times 355}{115.87}\left(1 - \left(\frac{250}{364.34}\right)^2\right)$ $= 37.41kN$ $V_{b,Rd} = V_{bw,Rd} + V_{bf,Rd}$ $= 536.82 + 37.41$ $= 574.23kN < \frac{\eta f_{yw} d t_w}{\sqrt{3}\gamma_{M1}} = 704.60kN$ $> V_{Ed} = 300kN$	$h = 536.7mm$ $a = 460.2mm$ OK

Check 5 – Weld group of fin plate (Two-side C shape fillet weld)		
Ref	Calculations	Remark
SS EN1993-1-8	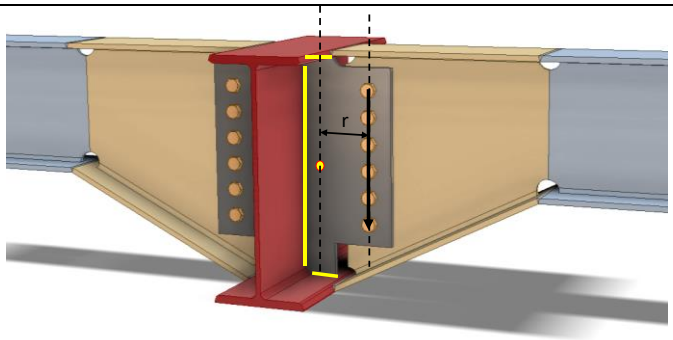 Location of center of gravity of welds group: $\bar{x} = \frac{b^2}{(2b + d)}$ $= \frac{74.6^2}{(2 \times 74.6 + 501.9)}$ $= 8.55mm$ $\bar{y} = \frac{d}{2}$ $= \frac{501.9}{2}$ $= 250.95mm$ Unit throat area: $A_u = 2b' + d'$ $= 2 \times 59.6 + 471.9$ $= 591.1mm$ Moment arm between applied force and weld center: $r = 144.77mm$ Induced moment on welds: $M = \frac{V_{Ed}}{2} r$ $= \frac{300}{2} \times 144.77$ $= 21715.5kNmm$	Length of fillet weld: Width: $b = 74.6mm$ Depth: $d = 501.9mm$ Cope hole size: $n = 15mm$ $b' = b - n$ $= 74.6 - 15$ $= 59.6mm$ $d' = d - 2n$ $= 501.9 - 2 \times 15$ $= 471.9mm$

Check 5 – Weld group of fin plate (Two-side C shape fillet weld)		
Ref	Calculations	Remark
	Polar moment of inertia: $J = \frac{8b'^3 + 6b'd'^2 + d'^3}{12} - \frac{b'^4}{2b' + d'}$ $= \frac{8 \times 59.6^3 + 6 \times 59.6 \times 471.9^2 + 471.9^3}{12}$ $- \frac{59.6^4}{2 \times 59.6 + 471.9}$ $= 15513212mm^3$ **Critical point:** Horizontal distance from centroid: $r_{zh} = b - \bar{x}$ $= 74.6 - 8.55$ $= 66.05mm$ Vertical distance from centroid: $r_{zv} = \bar{y}$ $= 250.95mm$ Vertical stress: $\tau_v = \frac{V_{Ed}}{A_u} + \frac{Mr_{zh}}{J}$ $= \frac{300}{2 \times 591.1} + \frac{21715.5 \times 66.05}{15513212}$ $= 0.35kN/mm$ Horizontal stress: $\tau_h = \frac{Mr_{zv}}{J}$ $= \frac{21715.5 \times 250.95}{15513212}$ $= 0.35kN/mm$ Resultant stress: $\tau_r = \sqrt{r_v^2 + r_h^2}$ $= \sqrt{0.35^2 + 0.35^2}$ $= 0.49kN/mm$	

Check 5 – Weld group of fin plate (Two-side C shape fillet weld)		
Ref	Calculations	Remark
	Choose fillet weld with 5mm leg length, 3.5mm throat thickness and grade S355 which match beam steel grade: Longitudinal resistance: $F_{w,L,Rd} = 0.84kN/mm$ Transverse resistance: $F_{w,T,Rd} = 1.03kN/mm$ **Simplified method:** $F_{w,L,Rd} = 0.84kN/mm > \tau_r = 0.50kN/mm$ **Directional method:** $SF = \left(\frac{\tau_v}{F_{w,L,Rd}}\right)^2 + \left(\frac{\tau_h}{F_{w,T,Rd}}\right)^2$ $= \left(\frac{0.35}{0.84}\right)^2 + \left(\frac{0.35}{1.03}\right)^2$ $= 0.29 < 1.0$	 OK OK

*Suggestions to reduce the stress concentration:

As the thicknesses of the flanges of primary beam and secondary beam are different, the connection between the flanges may result in stress concentration. In order to reduce the stress concentration, transition should be provided at butt weld area. Figure *2-4* below shows the example of transition.

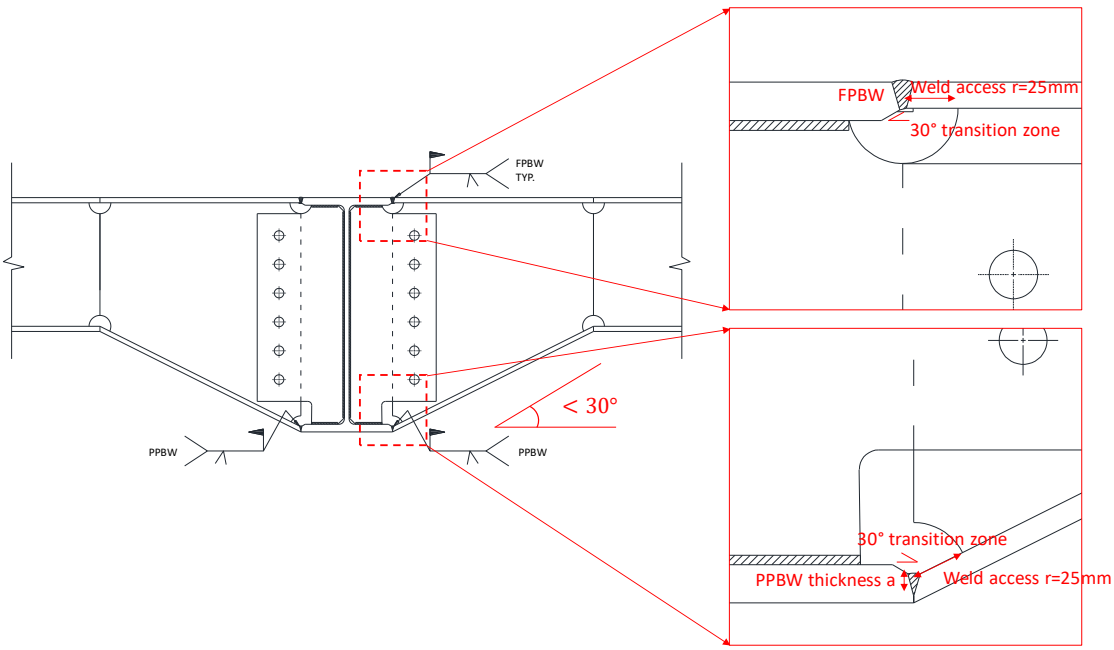

Figure 2-4 Example of transition to reduce stress concentration

Check 6 – Web resistance of the beam flange		
Ref	Calculations	Remark
	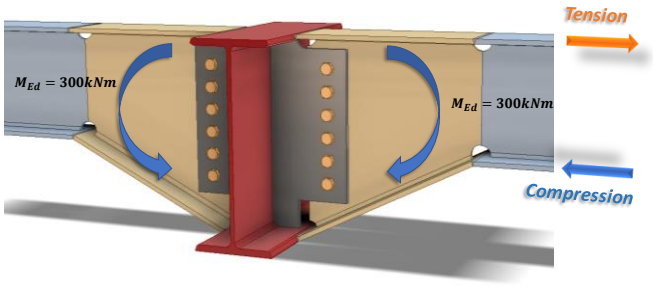	
SS EN1993	Assume the applied moment is taken by the flanges of the secondary beam, the flange thicknesses of both haunch and secondary beam are same. The beam flange tensile resistance is $F_{Rd,flange} = \frac{t_f b_f f_{y,bf}}{\gamma_{M0}}$ $= \frac{11.8 \times 165.7 \times 345}{1.0} \times 10^{-3}$ $= 694.12kN$ Moment arm: $r = h_b - t_{f,b}$ $= 536.7 - 11.8$ $= 524.9mm$ Tensile force on flange: $F_{Ed} = \frac{M_{Ed}}{r}$ $= \frac{250}{524.9} \times 10^3$ $= 476.28kN < F_{Rd,flange} = 694.12kN$	
BS 5950-1 6.9.2	**Partial penetration butt weld resistance:** The minimum throat size of a longitudinal partial penetration butt weld should be $2\sqrt{t}$ (in mm), where t is the thickness of the thinner part of joint.	
SS EN1993-1-1 4.7.2 (1)	The design resistance of a partial penetration butt weld should be determined using the method for a deep penetration fillet weld.	

Check 6 – Web resistance of the beam flange		
Ref	Calculations	Remark
	In this example, the angle between the transverse force and weld throat $\theta = 90°$. Provided the groove angle is greater than 60° or U-butt is adopted, the throat thickness is equal to the depth of penetration. 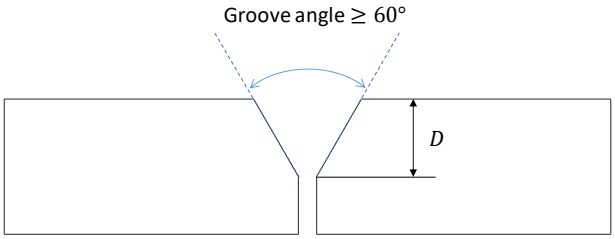 Choose partial butt weld with 12mm ($> 2\sqrt{11.8} = 6.87mm$) throat thickness and grade S355 which match the beam material properties: Transverse resistance: $F_{w,T,Rd} = \frac{0.9f_u}{\gamma_{M2}}a$ $= 0.9 \times 470 \times \frac{12}{1.25} \times 10^{-3}$ $= 4.06kN/mm$ Tensile resistance of the PPBW: $F_{Rd} = F_{w,T,Rd}b_f$ $= 4.06 \times 165.7$ $= 672.74kN > F_{Ed} = 476.28kN$	OK

2.4.5 Example 11 – Double-sided Beam-to-Beam connection with extended fin-plate (moment-resisting connection) for beams of different depths with connection plate

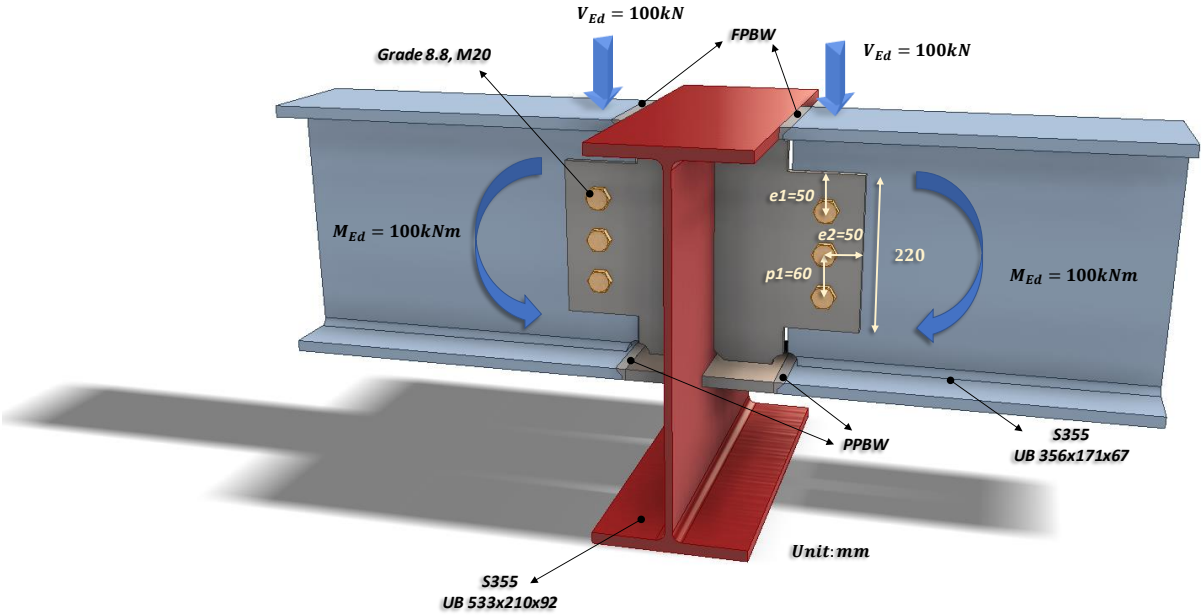

Check 1 – Bolt group resistance		
Ref	Calculations	Remark
SS EN1993-1-8	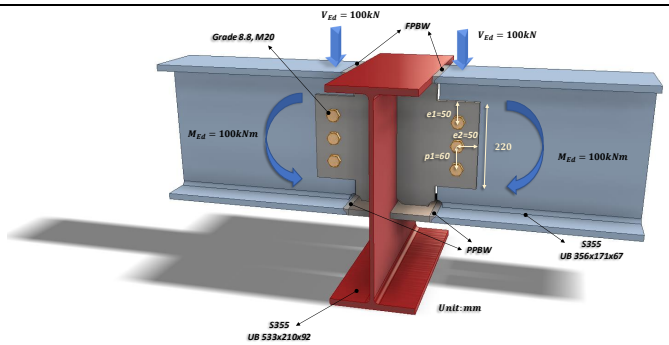 **Bolt resistance:** Using Gr8.8, M20 bolts with: $A_s = 245mm^2; f_{ub} = 800MPa;$ **Shear resistance of a single bolt:** $F_{v,Rd} = \frac{\alpha_v f_{ub} A_s}{\gamma_{M2}}$ $= \frac{0.6 \times 800 \times 245}{1.25} \times 10^{-3}$ $= 94.08kN$ For single vertical line of bolts ($n_2 = 1$): $n_1 = 3, n = 3 \times 1 = 3$ $\alpha = 0$ $\beta = \frac{6z}{n_1(n_1+1)p_1}$ $= \frac{3 \times 65mm}{3 \times (3+1) \times 60mm}$ $= 0.54$ $V_{Rd} = \frac{nF_{V,Rd}}{\sqrt{(1+\alpha n)^2 + (\beta n)^2}}$ $= \frac{3 \times 94.08}{\sqrt{(1+0)^2 + (0.54 \times 3)^2}} \times 10^{-3}$ $= 147.92kN > V_{Ed} = 100kN$	For class 8.8: $\alpha_v = 0.6$ $\gamma_{M2} = 1.25$ (refer to NA to SS) $z = 65.00mm$ OK

Check 1 – Bolt group resistance		
Ref	Calculations	Remark
	Bearing resistance on fin plate: For bearing resistance in vertical direction of one bolt: $\alpha_b = \min\left(\frac{e_1}{3d_0}; \frac{p_1}{3d_0} - \frac{1}{4}; \frac{f_{ub}}{f_u}; 1.0\right)$ $= \min\left(\frac{50}{3 \times 22}; \frac{60}{3 \times 22} - \frac{1}{4}; \frac{800}{490}; 1.0\right)$ $= 0.6591$ $k_1 = \min\left(\frac{2.8e_2}{d_0} - 1.7; \frac{1.4p_2}{d_0} - 1.7; 2.5\right)$ $= \min\left(\frac{2.8 \times 50}{22} - 1.7; 2.5\right)$ $= 2.5$ $F_{b,ver,Rd} = \frac{k_1 \alpha_b f_{u,p} d t_p}{\gamma_{M2}}$ $= \frac{2.5 \times 0.6591 \times 490 \times 20 \times 12}{1.25}$ $= 155.02kN$ For bearing resistance in horizontal direction of one bolt: $k_1 = \min\left(\frac{2.8e_1}{d_o} - 1.7; \frac{1.4p_1}{d_0} - 1.7; 2.5\right)$ $= \min\left(\frac{2.8 \times 50}{22} - 1.7; \frac{1.4 \times 60}{22} - 1.7; 2.5\right)$ $= 2.12$ $\alpha_b = \min\left(\frac{e_2}{3d_0}; \frac{p_2}{3d_0} - \frac{1}{4}; \frac{f_{ub}}{f_{u,p}}; 1.0\right)$ $= \min\left(\frac{50}{3 \times 22}; \frac{800}{490}; 1.0\right)$ $= 0.76$	$\boldsymbol{e_1 = 50.0mm}$ $(1.2d_0 < e_1 < 4t + 40mm)$ $\boldsymbol{p_1 = 60.0mm}$ $(2.2d_0 < p_1 < 14t\ or\ 200mm)$ $\boldsymbol{e_2 = 50.0mm}$ $(1.2d_0 < e_2 < 4t + 40mm)$ $\boldsymbol{p_2 = nil}$ $(2.4d_0 < p_2 < 14t\ or\ 200mm)$ $t_p = 12.0mm$ $t_{tab} < 16mm$ $f_{u,p} = 490MPa$ $f_{y,p} = 355MPa$

Check 1 – Bolt group resistance		
Ref	Calculations	Remark
	$F_{b,hor,Rd} = \frac{k_1 \alpha_b f_{u,p} d t_p}{\gamma_{M2}}$ $= \frac{2.12 \times 0.76 \times 490 \times 20 \times 12}{1.25} \times 10^{-3}$ $= 150.97\text{kN}$ **Bolt group bearing resistance:** $V_{Rd} = \frac{n}{\sqrt{\left(\frac{1+\alpha n}{F_{b,ver,Rd}}\right)^2 + \left(\frac{\beta n}{F_{b,hor,Rd}}\right)^2}}$ $= \frac{3}{\sqrt{\left(\frac{1}{155.02}\right)^2 + \left(\frac{0.54 \times 3}{150.97}\right)^2}} \times 10^{-3}$ $= 239.07kN > V_{Ed} = 100kN$	OK
	Bearing resistance on beam web: Vertical bearing resistance: $\alpha_b = \min\left(\frac{e_{1,b}}{3d_0}; \frac{p_{1,b}}{3d_0} - \frac{1}{4}; \frac{f_{ub}}{f_{u,b}}; 1.0\right)$ $= \min\left(\frac{121.7}{3 \times 22}; \frac{60}{3 \times 22} - \frac{1}{4}; \frac{800}{490}; 1.0\right)$ $= 0.6591$ $k_1 = \min\left(\frac{2.8 e_{2,b}}{d_0} - 1.7; 2.5\right)$ $= \min\left(\frac{2.8 \times 50}{22} - 1.7; 2.5\right)$ $= 2.5$ $F_{b,ver,Rd} = \frac{k_1 \alpha_b f_{u,b} d t_{w,b1}}{\gamma_{M2}}$ $= \frac{2.5 \times 0.6591 \times 490 \times 20 \times 9.1}{1.25}$ $= 117.56kN$	$\boldsymbol{e_{1,b} = 121.7mm}$ $\boldsymbol{p_{1,b} = 60.0mm}$ $\boldsymbol{e_{2,b} = 50.0mm}$ $\boldsymbol{p_{2,b} = nil}$ $t_{w,b1} = 9.1mm$ $t_{w,b1} < 16mm$ $f_{u,b} = 490MPa$ $f_{y,b} = 355MPa$

Check 1 – Bolt group resistance		
Ref	Calculations	Remark
	Horizontal bearing resistance: $k_1 = \min\left(\frac{2.8e_{1,b}}{d_o} - 1.7; \frac{1.4p_1}{d_0} - 1.7; 2.5\right)$ $= \min\left(\frac{2.8 \times 121.7}{22} - 1.7; \frac{1.4 \times 60}{22} - 1.7; 2.5\right)$ $= 2.12$ $\alpha_b = \min\left(\frac{e_{2,b}}{3d_0}; \frac{p_2}{3d_0} - \frac{1}{4}; \frac{f_{ub}}{f_{u,b1}}; 1.0\right)$ $= \min\left(\frac{50}{3 \times 22}; \frac{800}{510}; 1.0\right)$ $= 0.76$ $F_{b,hor,Rd} = \frac{k_1 \alpha_b f_{u,b1} d t_{w,b1}}{\gamma_{M2}}$ $= \frac{2.12 \times 0.76 \times 490 \times 20 \times 9.1}{1.25} \times 10^{-3}$ $= 114.48kN$ **Bolt group bearing resistance:** $V_{Rd} = \frac{n}{\sqrt{\left(\frac{1+\alpha n}{F_{b,ver,Rd}}\right)^2 + \left(\frac{\beta n}{F_{b,hor,Rd}}\right)^2}}$ $= \frac{3}{\sqrt{\left(\frac{1}{117.56}\right)^2 + \left(\frac{0.54 \times 3}{114.48}\right)^2}} \times 10^{-3}$ $= 181.29kN > V_{Ed} = 100kN$	OK

Check 2 – Fin plate resistance		
Ref	Calculations	Remark
SS EN1993 SCI_P358	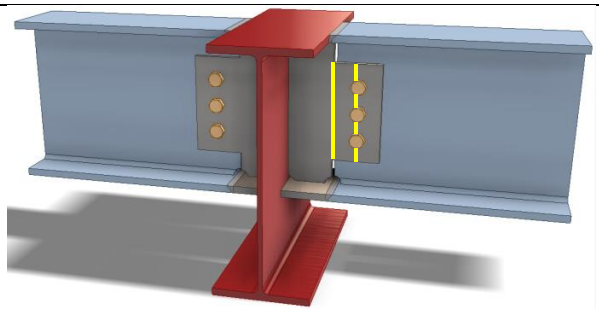 **Fin plate shear (gross section) resistance:** $V_{Rd,g} = \frac{h_p t_p}{1.27} \frac{f_{y,p}}{\sqrt{3}\gamma_{M0}}$ $= \frac{220 \times 12}{1.27} \times \frac{355}{\sqrt{3}} \times 10^{-3}$ $= 426.06kN$ **Fin plate shear (net section) resistance:** Net area: $A_{net} = (h_p - nd_0)t_p$ $= (220 - 3 \times 22) \times 12$ $= 1848mm^2$ $V_{Rd,n} = \frac{A_{net} f_{u,p}}{\sqrt{3}\gamma_{M2}}$ $= \frac{1848 \times 490}{\sqrt{3} \times 1.25} \times 10^{-3}$ $= 418.24kN$ **Fin plate shear (block shear) resistance:** Net area subject to tension: $A_{nt} = (e_2 - 0.5d_0)t_p$ $= (50 - 0.5 \times 22) \times 12$ $= 468mm^2$ Net area subject to shear: $A_{nv} = (e_1 + (n-1)P_1 - (n-0.5)d_0)t_p$ $= (50 + 2 \times 60 - 2.5 \times 22) \times 12$ $= 1380mm^2$	$h_p = 220.0mm$ $\gamma_{M0} = 1.0$ (SS EN1993-1-1)

Check 2 – Fin plate resistance		
Ref	Calculations	Remark
	$V_{Rd,b} = \frac{0.5 f_{u,p} A_{nt}}{\gamma_{M2}} + \frac{f_{y,p} A_{nv}}{\sqrt{3}\gamma_{M0}}$ $= \left(\frac{0.5 \times 490 \times 468}{1.25} + \frac{355 \times 1380}{\sqrt{3}}\right) \times 10^{-3}$ $= 374.57kN$ **Shear resistance of fin plate:** $V_{Rd} = \min(V_{Rd,g}, V_{Rd,n}, V_{Rd,b})$ $= \min(426.06, 418.24, 374.57)$ $= 374.57kN > V_{Ed} = 100kN$	OK

Check 3 – Secondary beam web shear resistance		
Ref	Calculations	Remark
SS EN1993 SCI_P358	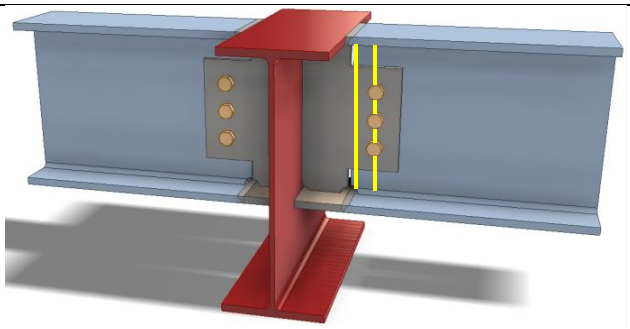 **Beam web resistance (gross section):** For UB356x171x67: Cross-section area, $A_g = 8550mm^2$ Flange width, $b_f = 173.2mm$ Flange thickness, $t_f = 15.7mm$ Weld access radius, $r = 25mm$ Shear area: $A_v = A_g - 2t_f b_f - 2rt_{w,b1}$ $= 8550 - 2 \times 15.7 \times 173.2 - 2 \times 25 \times 9.1$ $= 2656.52mm^2$ $V_{Rd,g} = \frac{A_v f_{y,b1}}{\sqrt{3}\gamma_{M0}}$ $= \frac{2656.52 \times 355}{\sqrt{3}} \times 10^{-3}$ $= 544.48kN$ **Beam web shear resistance (net section):** Area of net section: $A_{net} = A_v - nd_0 t_{w,b}$ $= 2656.52 - 3 \times 22 \times 9.1$ $= 2055.92mm^2$ $V_{Rd,n} = \frac{A_{v,net} f_{u,b}}{\sqrt{3}\gamma_{M2}}$ $= \frac{2055.92 \times 490}{\sqrt{3} \times 1.25} \times 10^{-3}$ $= 581.62kN$	

Check 3 – Secondary beam web shear resistance		
Ref	Calculations	Remark
	Shear resistance of fin plate: $V_{Rd} = \min(V_{Rd,g}, V_{Rd,n})$ $= \min(544.48, 581.62)$ $= 544.48kN > V_{Ed} = 100kN$ For **short fin plate**, **shear and bending moment interaction check** is not necessary for beam web.	OK

Check 4 – Weld group resistance of fin plate (Two-side C shape fillet weld)		
Ref	Calculations	Remark
SS EN1993-1-8	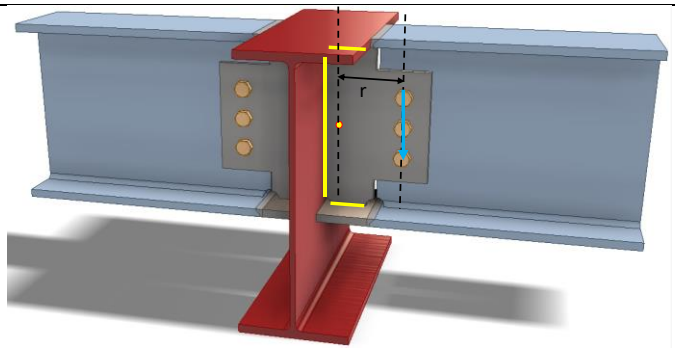 Location of center of gravity of welds group: $\bar{x} = \frac{b^2}{(2b + d)}$ $= \frac{74.6^2}{(2 \times 74.6 + 332)}$ $= 11.57mm$ $\bar{y} = \frac{d}{2}$ $= \frac{332}{2}$ $= 166mm$ Unit throat area: $A_u = 2b' + d'$ $= 2 \times 59.6 + 302$ $= 421.2mm$ Moment arm between applied force and weld center: $r = 142.76mm$ Induced moment on welds: $M = \frac{V_{Ed}}{2} r$ $= \frac{100}{2} \times 142.76$ $= 7138kNmm$	Length of fillet weld: Width: $b = 74.6mm$ Depth: $d = 332mm$ Cope hole size: $n = 15mm$ $b' = b - n$ $= 74.6 - 15$ $= 59.6mm$ $d' = d - 2n$ $= 332 - 2 \times 15$ $= 302mm$

Check 4 – Weld group resistance of fin plate (Two-side C shape fillet weld)		
Ref	Calculations	Remark
	Polar moment of inertia: $J = \frac{8b'^3 + 6b'd'^2 + d'^3}{12} - \frac{b'^4}{2b' + d'}$ $= \frac{8 \times 59.6^3 + 6 \times 59.6 \times 302^2 + 302^3}{12}$ $- \frac{59.6^4}{2 \times 59.6 + 302}$ $= 5124362mm^3$ **Critical point:** Horizontal distance from centroid: $r_{zh} = b - \bar{x}$ $= 74.6 - 11.57$ $= 63.03mm$ Vertical distance from centroid: $r_{zv} = \bar{y}$ $= 166mm$ Vertical stress: $\tau_v = \frac{V_{Ed}}{A_u} + \frac{Mr_{zh}}{J}$ $= \frac{200}{2 \times 421.2} + \frac{7138 \times 63.03}{5124362}$ $= 0.207kN/mm$ Horizontal stress: $\tau_h = \frac{Mr_{zv}}{J}$ $= \frac{7138 \times 166}{5124362}$ $= 0.231kN/mm$ Resultant stress: $\tau_r = \sqrt{r_v^2 + r_h^2}$ $= \sqrt{0.207^2 + 0.231^2}$ $= 0.31kN/mm$	

Check 4 – Weld group resistance of fin plate (Two-side C shape fillet weld)		
Ref	Calculations	Remark
	Given fillet weld with 5mm leg length, 3.5mm throat thickness and grade S355 which match beam steel grade: Longitudinal resistance: $F_{w,L,Rd} = 0.84kN/mm$ Transverse resistance: $F_{w,T,Rd} = 1.03kN/mm$ **Simplified method:** $F_{w,L,Rd} = 0.84kN/mm > \tau_r = 0.31kN/mm$ **Directional method:** $SF = \left(\frac{\tau_v}{F_{w,L,Rd}}\right)^2 + \left(\frac{\tau_h}{F_{w,T,Rd}}\right)^2$ $= \left(\frac{0.213}{0.84}\right)^2 + \left(\frac{0.231}{1.03}\right)^2$ $= 0.11 < 1.0$	 OK OK

Check 5 – Weld resistance on beam flange		
Ref	Calculations	Remark
	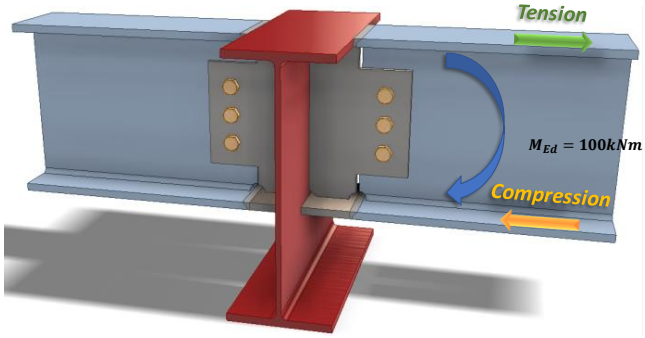	
SS EN1993	Assume the applied moment is taken by the flanges of the secondary beam, the flange thicknesses of both primary and secondary beam are almost similar (15.6mm & 15.7mm for primary and secondary respectively) The beam flange tensile resistance is $F_{Rd,flange} = \frac{t_f b_f f_{y,bf}}{\gamma_{M0}}$ $= \frac{15.7 \times 173.2 \times 355}{1.0} \times 10^{-3}$ $= 965.33kN$ Moment arm: $r = h_b - t_{f,b}$ $= 363.4 - 15.7$ $= 347.7mm$ Tensile force on flange: $F_{Ed} = \frac{M_{Ed}}{r}$ $= \frac{100}{347.7} \times 10^3$ $= 287.60kN < F_{Rd,flange} = 965.33kN$	
BS 5950-1 6.9.2	**Partial penetration butt weld resistance:** The minimum throat size of a longitudinal partial penetration butt weld should be $2\sqrt{t}$ (in mm), where t is the thickness of the thinner part of joint.	

Check 5 – Weld resistance on beam flange		
Ref	Calculations	Remark
SS EN1993-1-1 4.7.2 (1)	The design resistance of a partial penetration butt weld should be determined using the method for a deep penetration fillet weld. In this example, the angle between the transverse force and weld throat $\theta = 90°$. Provided the groove angle is greater than $60°$ or U-butt is adopted, the throat thickness is equal to the depth of penetration. 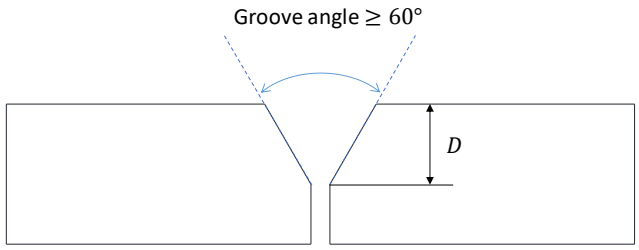 Choose partial butt weld with 12mm ($> 2\sqrt{19.6} = 8.85mm$) throat thickness and grade S355 which match the beam material properties: Transverse resistance: $F_{w,T,Rd} = \frac{0.9f_u}{\gamma_{M2}} a$ $= 0.9 \times 470 \times \frac{12}{1.25} \times 10^{-3}$ $= 4.06kN/mm$ Tensile resistance of the PPBW: $F_{Rd} = F_{w,T,Rd} b_f$ $= 4.06 \times 173.2$ $= 703.19kN > F_{Ed} = 287.60kN$ Classification of connecting plate: $\varepsilon = \sqrt{\frac{235}{f_{y,b}}} = \sqrt{\frac{235}{355}} = 0.8136$ As the thickness of the connecting plate is same as the thickness of the bottom flange of the secondary beam	OK

Check 5 – Weld resistance on beam flange		
Ref	Calculations	Remark
	$\frac{c_f}{t_f} = 4.58 < 9\varepsilon = 7.32$ Hence the connecting plate is classified as Class 1 and will not subject to local buckling.	

2.4.6 Example 12 – I-beams connecting to hollow section column with external ring plate

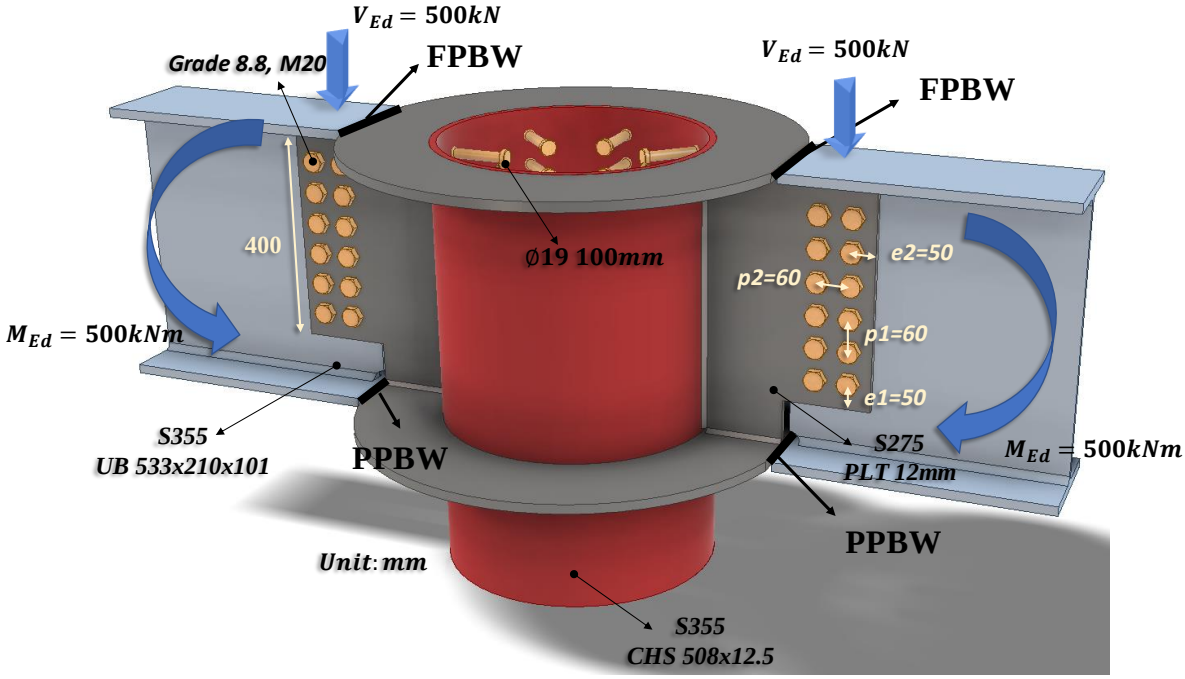

Check 1 – Bolt group resistance		
Ref	Calculations	Remark
	According to AISC Guide, for flange-plated moment connections, the shear-plate connection can be designed for shear only while the rotation is considered resisted by the flange connections; Hence, in this case, all shear force is assumed to be resisted by the bolt groups while the butt weld in the beam flanges resists the applied moment. 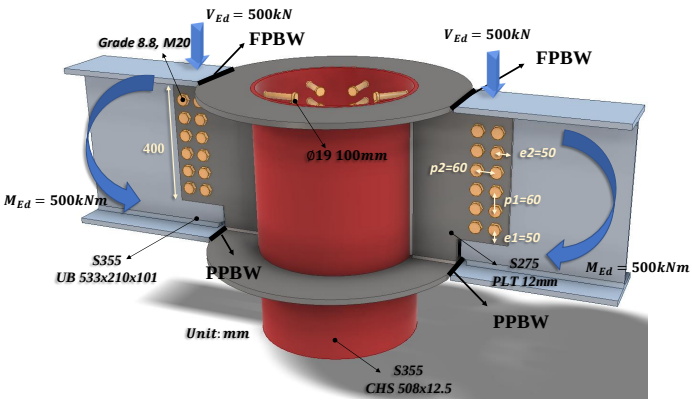 	
SS EN1993-1-8	**Bolt resistance:** Using Gr8.8, M20 bolts with: $A_s = 245mm^2; f_{ub} = 800MPa;$ **Shear resistance of a single bolt:** $F_{v,Rd} = \frac{\alpha_v f_{ub} A_s}{\gamma_{M2}}$ $= \frac{0.6 \times 800 \times 245}{1.25} \times 10^{-3}$ $= 94.08kN$	For class 8.8: $\alpha_v = 0.6$ $\gamma_{M2} = 1.25$ (refer to NA to SS)
SCI_P358 SN017	For two vertical lines of bolts ($n_2 = 2$): $l = \frac{n_1}{2} p_2^2 + \frac{1}{6} n_1 (n_1^2 - 1) p_1^2$ $= \frac{6}{2}(60^2) + \frac{1}{6}(6)(6^2 - 1)(60^2)$ $= 136800mm^2$	$z = 100mm$ $\boldsymbol{e_1 = 50.0mm}$ $(1.2d_0 < e_1 < 4t + 40mm)$ $\boldsymbol{p_1 = 60.0mm}$ $(2.2d_0 < p_1 < 14t\ or\ 200mm)$ $\boldsymbol{e_2 = 50.0mm}$ $(1.2d_0 < e_2 < 4t + 40mm)$ $\boldsymbol{p_2 = 60.0mm}$

Check 1 – Bolt group resistance		
Ref	Calculations	Remark
	$\alpha = \frac{zp_2}{2l}$ $= \frac{100 \times 60}{2 \times 136800}$ $= 0.02$ $\beta = \frac{zp_1}{2l}(n_1 - 1)$ $= \frac{100 \times 60}{2 \times 136800}(6 - 1)$ $= 0.11$ $n_1 = 6, n_2 = 2,\ n = 6 \times 2 = 12$ $V_{Rd} = \frac{nF_{V,Rd}}{\sqrt{(1+\alpha n)^2 + (\beta n)^2}}$ $= \frac{12 \times 94.08 \times 10^{-3}}{\sqrt{(1+0.02 \times 12)^2 + (0.11 \times 12)^2}}$ $= 618.96kN > V_{Ed} = 500kN$	$(2.4d_0 < p_2 < 14t\ or\ 200mm)$ OK!
SCI_P358 SS EN1993-1-8	**Bolt bearing resistance in the fin plate:** For bearing resistance in vertical direction of one bolt: $k_1 = \min\left(\frac{2.8e_2}{d_o} - 1.7; \frac{1.4p_2}{d_0} - 1.7; 2.5\right)$ $= \min\left(\frac{2.8 \times 50}{22} - 1.7; \frac{1.4 \times 60}{22} - 1.7; 2.5\right)$ $= 2.12$ $\alpha_b = \min\left(\frac{e_1}{3d_0}; \frac{p_1}{3d_0} - \frac{1}{4}; \frac{f_{ub}}{f_{u,p}}; 1.0\right)$ $= \min\left(\frac{50}{3 \times 22}; \frac{60}{3 \times 22} - \frac{1}{4}; \frac{800}{490}; 1.0\right)$ $= 0.66$	$t_p = 12mm$

Check 1 – Bolt group resistance		
Ref	Calculations	Remark
	$F_{b,ver,Rd} = \frac{k_1 \alpha_b f_{u,p} d t_p}{\gamma_{M2}}$ $= \frac{2.12 \times 0.66 \times 490 \times 20 \times 12}{1.25} \times 10^{-3}$ $= 131.34kN$ For bearing resistance in horizontal direction of one bolt: $k_1 = \min\left(\frac{2.8e_1}{d_o} - 1.7; \frac{1.4p_1}{d_0} - 1.7; 2.5\right)$ $= \min\left(\frac{2.8 \times 50}{22} - 1.7; \frac{1.4 \times 60}{22} - 1.7; 2.5\right)$ $= 2.12$ $\alpha_b = \min\left(\frac{e_2}{3d_0}; \frac{p_2}{3d_0} - \frac{1}{4}; \frac{f_{ub}}{f_{u,p}}; 1.0\right)$ $= \min\left(\frac{50}{3 \times 22}; \frac{60}{3 \times 22} - \frac{1}{4}; \frac{800}{490}; 1.0\right)$ $= 0.66$ $F_{b,hor,Rd} = \frac{k_1 \alpha_b f_{u,p} d t_p}{\gamma_{M2}}$ $= \frac{2.12 \times 0.66 \times 490 \times 20 \times 12}{1.25} \times 10^{-3}$ $= 131.34\text{kN}$ **Bolt group bearing resistance:** $V_{Rd} = \frac{n}{\sqrt{\left(\frac{1 + \alpha n}{F_{b,ver,Rd}}\right)^2 + \left(\frac{\beta n}{F_{b,hor,Rd}}\right)^2}}$ $= \frac{12 \times 10^{-3}}{\sqrt{\left(\frac{1 + 0.02 \times 12}{131.34}\right)^2 + \left(\frac{0.11 \times 12}{131.34}\right)^2}}$ $= 864.11kN > V_{Ed} = 500kN$	OK!

Check 1 – Bolt group resistance		
Ref	Calculations	Remark
SCI_P358 SS EN1993-1-8	**Bolt bearing resistance in secondary beam web:** Vertical bearing resistance: $k_1 = \min\left(\frac{2.8e_{2,b}}{d_o} - 1.7; \frac{1.4p_2}{d_0} - 1.7; 2.5\right)$ $= \min\left(\frac{2.8 \times 50}{22} - 1.7; \frac{1.4 \times 60}{22} - 1.7; 2.5\right)$ $= 2.12$ $\alpha_b = \min\left(\frac{e_{1,b}}{3d_0}; \frac{p_1}{3d_0} - \frac{1}{4}; \frac{f_{ub}}{f_{u,b1}}; 1.0\right)$ $= \min\left(\frac{87.4}{3 \times 22}; \frac{60}{3 \times 22} - \frac{1}{4}; \frac{800}{490}; 1.0\right)$ $= 0.66$ $F_{b,ver,Rd} = \frac{k_1 \alpha_b f_{u,b1} d t_{w,b1}}{\gamma_{M2}}$ $= \frac{2.12 \times 0.66 \times 490 \times 20 \times 10.8}{1.25} \times 10^{-3}$ $= 118.21kN$ Horizontal bearing resistance: $k_1 = \min\left(\frac{2.8e_{1,b}}{d_o} - 1.7; \frac{1.4p_1}{d_0} - 1.7; 2.5\right)$ $= \min\left(\frac{2.8 \times 87.4}{22} - 1.7; \frac{1.4 \times 60}{22} - 1.7; 2.5\right)$ $= 2.12$ $\alpha_b = \min\left(\frac{e_{2,b}}{3d_0}; \frac{p_2}{3d_0} - \frac{1}{4}; \frac{f_{ub}}{f_{u,b1}}; 1.0\right)$ $= \min\left(\frac{50}{3 \times 22}; \frac{60}{3 \times 22} - \frac{1}{4}; \frac{800}{490}; 1.0\right)$ $= 0.66$	$e_{1,b} = 87.4mm$ $e_{2,b} = 50.0mm$ $t_{w,b1} = 10.8mm$

Check 1 – Bolt group resistance		
Ref	Calculations	Remark
	$F_{b,hor,Rd} = \frac{k_1 \alpha_b f_{u,b1} d t_{w,b1}}{\gamma_{M2}}$ $= \frac{2.12 \times 0.66 \times 490 \times 20 \times 10.8}{1.25} \times 10^{-3}$ $= 118.21kN$ **Bolt group bearing resistance:** $V_{Rd} = \frac{n}{\sqrt{\left(\frac{1+\alpha n}{F_{b,ver,Rd}}\right)^2 + \left(\frac{\beta n}{F_{b,hor,Rd}}\right)^2}}$ $= \frac{12 \times 10^{-3}}{\sqrt{\left(\frac{1+0.02 \times 12}{118.21}\right)^2 + \left(\frac{0.11 \times 12}{118.21}\right)^2}}$ $= 777.70kN > V_{Ed} = 500kN$	OK!

Check 2 – Fin plate resistance		
Ref	Calculations	Remark
SS EN1993 SCI_P358	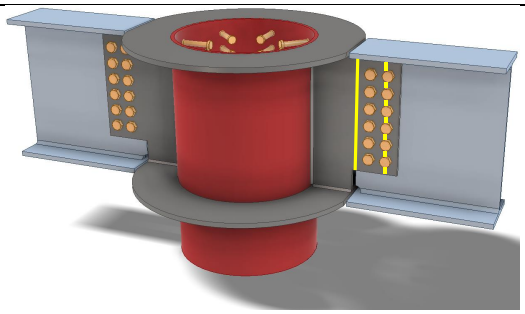 **Fin plate shear gross section resistance:** $V_{Rd,g} = \frac{h_p t_p}{1.27} \frac{f_{y,p}}{\sqrt{3}\gamma_{M0}}$ $= \frac{400 \times 12}{1.27} \times \frac{355}{\sqrt{3}} \times 10^{-3}$ $= 774.65kN$ **Fin plate shear net section resistance:** Net area: $A_{net} = (h_p - nd_0)t_p$ $= (400 - 6 \times 22) \times 12$ $= 3216mm^2$ $V_{Rd,n} = \frac{A_{net} f_{u,p}}{\sqrt{3}\gamma_{M2}}$ $= \frac{3216 \times 490}{\sqrt{3} \times 1.25} \times 10^{-3}$ $= 727.85kN$ 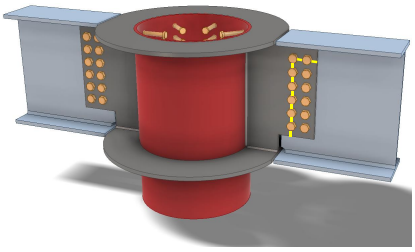 **Fin plate shear block shear resistance:** Net area subject to tension: $A_{nt} = (p_2 + e_2 - 1.5d_0)t_p$ $= (60 + 50 - 1.5 \times 22) \times 12$ $= 924mm^2$	$h_p = 400.0mm$ $\gamma_{M0} = 1.0$ (SS EN1993-1-1)

Check 2 – Fin plate resistance		
Ref	Calculations	Remark
	Net area subject to shear: $A_{nv} = (e_1 + (n-1)P_1 - (n-0.5)d_0)t_p$ $= (50 + 5 \times 60 - 5.5 \times 22) \times 12$ $= 2748mm^2$ $V_{Rd,b} = \frac{0.5 f_{u,p} A_{nt}}{\gamma_{M2}} + \frac{f_{y,p} A_{nv}}{\sqrt{3}\gamma_{M0}}$ $= \left(\frac{0.5 \times 490 \times 924}{1.25} + \frac{355 \times 2748}{\sqrt{3}}\right) \times 10^{-3}$ $= 744.33kN$ **Shear resistance of fin plate:** $V_{Rd} = \min(V_{Rd,g}, V_{Rd,n}, V_{Rd,b})$ $= \min(774.65, 727.85, 744.33)$ $= 727.85kN > V_{Ed} = 500kN$	OK!

Check 3 – Secondary beam web shear resistance		
Ref	Calculations	Remark
	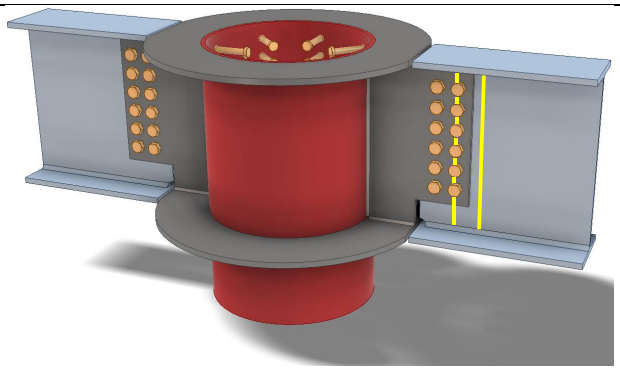	
SS EN1993 SCI_P358	**Beam web gross section resistance:** For UB533x210x101: Cross-section area, $A_g = 12900mm^2$ Flange width, $b_f = 210mm$ Flange thickness, $t_f = 17.4mm$ Root radius, $r = 12.7mm$ Shear area: $A_v = A_g - 2t_f b_f - 2t_w c$ $= 12900 - 2 \times 17.4 \times 210 - 2 \times 10.8 \times 20$ $= 5160mm^2$ $V_{Rd,g} = \frac{A_v f_{y,b1}}{\sqrt{3}\gamma_{M0}}$ $= \frac{5160 \times 355}{\sqrt{3}} \times 10^{-3}$ $= 1057.59kN$ **Beam web net section resistance:** Area of net section: $A_{net} = A_v - nd_0 t_{w,b}$ $= 5160 - 6 \times 22 \times 10.8$ $= 3734.4mm^2$ $V_{Rd,n} = \frac{A_{v,net} f_{u,b}}{\sqrt{3}\gamma_{M2}}$ $= \frac{3734.4 \times 490}{\sqrt{3} \times 1.25} \times 10^{-3}$ $= 1056.47kN$	$c = 20mm$ Weld access hole size

Check 3 – Secondary beam web shear resistance		
Ref	Calculations	Remark
	Shear resistance of fin plate: $V_{Rd} = \min(V_{Rd,g}, V_{Rd,n})$ $= \min(1057.59, 1056.47)$ $= 1056.47kN > V_{Ed} = 500kN$	OK!

Check 4 – Weld resistance of beam flange		
Ref	Calculations	Remark
	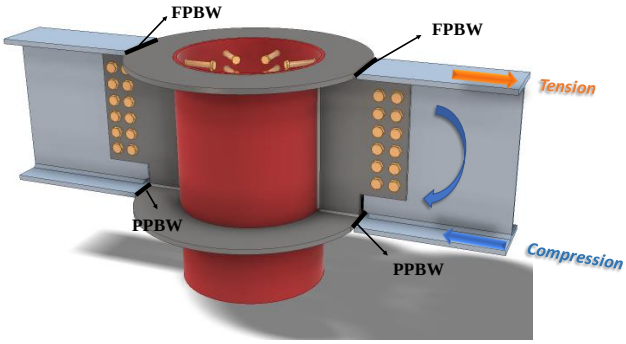	
SS EN1993	Assume the applied moment is taken by the flanges of the secondary beam, the thicknesses of both diaphragm ring and secondary beam flange are same. The beam flange tensile resistance is $F_{Rd,flange} = \frac{t_f b_f f_{y,bf}}{\gamma_{M0}}$ $= \frac{17.4 \times 210 \times 345}{1.0} \times 10^{-3}$ $= 1260.63kN$ Moment arm: $r = h_b - t_{f,b}$ $= 536.7 - 17.4$ $= 519.3mm$ Tensile force on flange: $F_{Ed} = \frac{M_{Ed}}{r}$ $= \frac{500}{519.3} \times 10^3$ $= 962.83kN < F_{Rd,flange} = 1260.63kN$	
BS 5950-1 6.9.2	**Partial penetration butt weld resistance:** The minimum throat size of a longitudinal partial penetration butt weld should be $2\sqrt{t}$ (in mm), where t is the thickness of the thinner part of joint.	
SS EN1993-1-1 4.7.2 (1)	The design resistance of a partial penetration butt weld should be determined using the method for a deep penetration fillet weld.	

Check 4 – Weld resistance of beam flange		
Ref	Calculations	Remark
	In this example, the angle between the transverse force and weld throat $\theta = 90°$. Provided the groove angle is greater than 60° or U-butt is adopted, the throat thickness is equal to the depth of penetration. 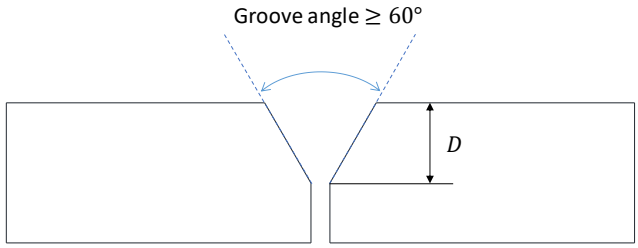 Choose partial butt weld with 16mm ($> 2\sqrt{17.4} = 8.34mm$) throat thickness and grade S355 which match the beam material properties: Transverse resistance: $F_{w,T,Rd} = \frac{0.9f_u}{\gamma_{M2}} a$ $= 0.9 \times 470 \times \frac{16}{1.25} \times 10^{-3}$ $= 5.41kN/mm$ Tensile resistance of the PPBW: $F_{Rd} = F_{w,T,Rd} b_f$ $= 5.41 \times 210$ $= 1137.02kN > F_{Ed} = 962.83kN$	f_u: ultimate strength $= 410MPa$ for S275 $= 470MPa$ for S355 a: throat thickness $\gamma_{M2} = 1.25$ OK!

Check 5 – External diaphragm ring check		
Ref	Calculations	Remark
CIDECT design guide 9	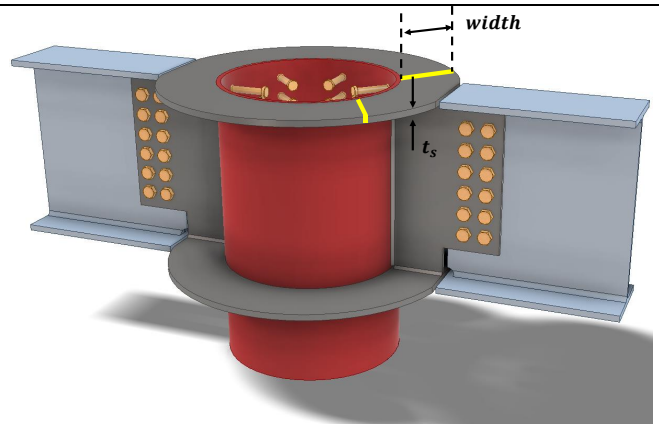 Basic properties: Diameter of CHS column: $d_c = 508mm$ Thickness of CHS column: $t_c = 16mm$ Width of diaphragm ring: $b_d = 50mm$ Thickness of diaphragm ring: $t_d = 18mm > t_f$ Yield strength of column: $f_{yc} = 355MPa$ Axial resistance of diaphragm ring: $N_{Rd} = 19.6\left(\frac{d_c}{t_c}\right)^{-1.54}\left(\frac{b_d}{d_c}\right)^{0.14}\left(\frac{t_d}{t_c}\right)^{0.34}\left(\frac{d_c}{2}\right)^{2} f_{yc}$ $= 19.6\left(\frac{508}{16}\right)^{-1.54}\left(\frac{50}{508}\right)^{0.14}\left(\frac{18}{16}\right)^{0.34}\left(\frac{508}{2}\right)^{2}$ $\times 355 \times 10^{-3}$ $= 1643.97kN > F_{Ed} = 962.83kN$ Range of validity: $14 < \frac{d_c}{t_c} = \frac{508}{16} = 31.75 < 36$ $0.05 < \frac{b_d}{d_c} = \frac{50}{508} = 0.10 < 0.14$ $0.75 < \frac{t_d}{t_c} = \frac{18}{16} = 1.125 < 2.0$	OK!

Note:

The thickness of the external diaphragm ring may be slightly thicker than the secondary beam flange, this provides tolerance for positioning the secondary beam.

Check 6 – Weld group of fin plate (Two-side C shape fillet weld)		
Ref	Calculations	Remark
SS EN1993-1-8	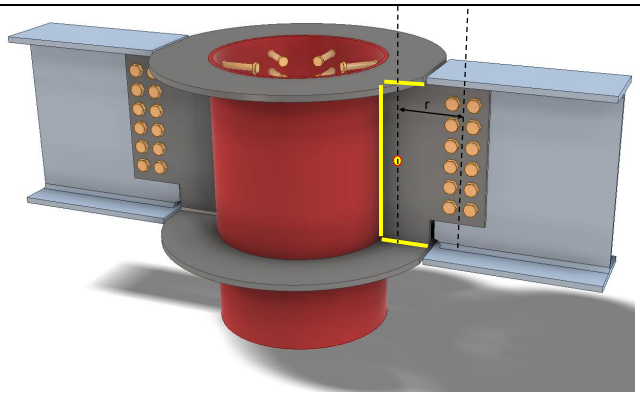 Location of center of gravity of welds group: $\bar{x} = \frac{b^2}{(2b + d)}$ $= \frac{130^2}{(2 \times 130 + 476.5)}$ $= 22.95mm$ $\bar{y} = \frac{d}{2}$ $= \frac{476.5}{2}$ $= 238.25mm$ Unit throat area: $A_u = 2b' + d'$ $= 2 \times 115 + 446.5$ $= 676.5mm$ Moment arm between applied force and weld center: $r = 236.07mm$ Induced moment on welds: $M = \frac{V_{Ed}}{2} r$ $= \frac{500}{2} \times 236.07$ $= 59017.5kNmm$	Length of fillet weld: Width: $b = 130mm$ Depth: $d = 476.5mm$ Cope hole size: $n = 15mm$ $b' = b - n$ $= 130 - 15$ $= 115mm$ $d' = d - 2n$ $= 476.5 - 2 \times 15$ $= 446.5mm$

Check 6 – Weld group of fin plate (Two-side C shape fillet weld)		
Ref	Calculations	Remark
	Polar moment of inertia: $J = \frac{8b'^3 + 6b'd'^2 + d'^3}{12} - \frac{b'^4}{2b' + d'}$ $= \frac{8 \times 115^3 + 6 \times 115 \times 446.5^2 + 446.5^3}{12}$ $- \frac{115^4}{2 \times 115 + 446.5}$ $= 19636646mm^3$ **Critical point:** Horizontal distance from centroid: $r_{zh} = b - \bar{x}$ $= 130 - 22.95$ $= 107.05mm$ Vertical distance from centroid: $r_{zv} = \bar{y}$ $= 238.25mm$ Vertical stress: $\tau_v = \frac{V_{Ed}}{A_u} + \frac{Mr_{zh}}{J}$ $= \frac{500}{2 \times 676.5} + \frac{59017.5 \times 107.05}{19636646}$ $= 0.691kN/mm$ Horizontal stress: $\tau_h = \frac{Mr_{zv}}{J}$ $= \frac{59017.5 \times 238.25}{19636646}$ $= 0.716kN/mm$ Resultant stress: $\tau_r = \sqrt{r_v^2 + r_h^2}$ $= \sqrt{0.691^2 + 0.716^2}$ $= 1.00kN/mm$	

Check 6 – Weld group of fin plate (Two-side C shape fillet weld)		
Ref	Calculations	Remark
SCI_P363	Choose fillet weld with 8mm leg length, 5.6mm throat thickness and grade S355 which match beam steel grade: Longitudinal resistance: $F_{w,L,Rd} = 1.35kN/mm$ Transverse resistance: $F_{w,T,Rd} = 1.65kN/mm$ **Simplified method:** $F_{w,L,Rd} = 1.35kN/mm > \tau_r = 1.00kN/mm$ **Directional method:** $SF = \left(\frac{\tau_v}{F_{w,L,Rd}}\right)^2 + \left(\frac{\tau_h}{F_{w,T,Rd}}\right)^2$ $= \left(\frac{0.691}{1.35}\right)^2 + \left(\frac{0.716}{1.65}\right)^2$ $= 0.45 < 1.0$	 OK OK

Check 7 – Column capacity		
Ref	Calculations	Remark
	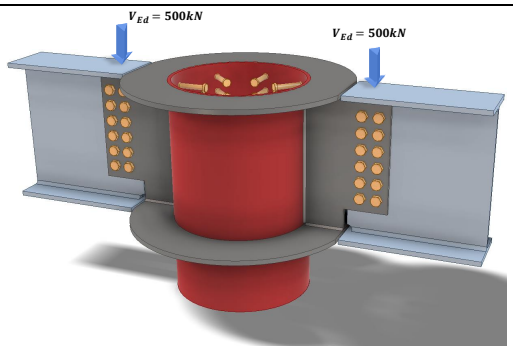	
SS EN1994	The reaction force from the beam is transferred to the composite column via the steel tube. The force acting on the concrete may be assumed to be proportional to the cross section axial resistance: $N_{cs,Ed} = 2N_{Ed}\left(1 - \frac{N_{a,Rd}}{N_{pl,Rd}}\right)$ $= 2 \times 500(1 - \frac{8770}{14703.66})$ $= 403.55kN$ The longitudinal shear stress at the surface of the steel section: $\tau_{Ed} = \frac{N_{cs,Ed}}{u_a l_v}$ $= \frac{403.55 \times 10^3}{1495 \times 952}$ $= 0.28MPa$ For Concrete-filled circular sections, the bond resistance is: $\tau_{Rd} = 0.55MPa > \tau_{Ed} = 0.28MPa$ As the shear capacity between steel and concrete is sufficient, shear stud may not be necessary in this case	$N_{a,Rd}$:Steel section axial resistance $N_{a,Rd} = 8770kN$ $N_{pl,Rd}$:Axial resistance of composite column $N_{pl,Rd}$ $= 14703.66kN$ u_a:Perimeter of the section $u_a = \pi(D - 2t)$ $= \pi \times (508 - 32)$ $= 1495mm$ l_v:Load introduction length (According to EC4, the introduction length should not exceed 2d or L/3, where d is the minimum transverse dimension of the column and L is the column length) Assume: $l_v = 2(D - 2t)$ $= 2(508 - 32)$ $= 952mm$
SCI_P358	Local shear resistance of column: Shear area: $A_v = h_p t_2$ $= 400 \times 16$ $= 6000mm^2$	

Check 7 – Column capacity		
Ref	Calculations	Remark
	$F_{Rd} = \frac{A_v f_{y,2}}{\sqrt{3}\gamma_{M0}}$ $= \frac{6000 \times 355}{\sqrt{3}} \times 10^{-3}$ $= 1229.76kN > V_{Ed} = 500kN$	OK!

Check 7a (for info) – Shear stud capacity		
Ref	Calculations	Remark
SS EN1994	Note: A conservative assumption is to assume that the bond is not effective in transferring the beam force to the concrete. The force acting on the concrete is designed to be resisted by shear studs. Shear capacity of shear stud: For h/d = 5.26 > 4, $\alpha = 1.0$ $P_{Rd} = \min\left(\frac{0.8 f_u \left(\frac{\pi d^2}{4}\right)}{\gamma_{Mv}}; \frac{0.29\alpha d^2 (F_{ck} E_{cm})^{\frac{1}{2}}}{\gamma_{Mv}}\right)$ $= \min\left(\frac{0.8 \times 450 \times \left(\frac{\pi 19^2}{4}\right)}{1.25} \times 10^{-3};\right.$ $\left.\frac{0.29 \times 1.0 \times 19^2 \times (40 \times 35000)^{\frac{1}{2}}}{1.25} \times 10^{-3}\right)$ $= 81.66kN$ Total resistance: $V_{Rd} = nP_{Rd} + 2R$ ∴ number of shear studs required assuming zero bond resistance: $n = \frac{N_{cs,Ed}}{P_{Rd}} = \frac{403.55}{81.66} = 5$ (∴ use 6 studs)	d:diameter of the shank of the stud $d = 19mm$ f_{ck}:characteristic cylinder strength of the concrete $f_{ck} = 40MPa$ f_u:ultimate strength of the stud $f_u = 450MPa$ h:overall height of the stud $h = 100mm$ E_{cm}:Secant modulus of the concrete $E_{cm} = 35000MPa$ γ_{Mv}:partial safety factor =1.25 R should not be considered in this case as it is applicable to concrete encased section SS EN1994-1-1, 6.7.4.2(4)

Note:

The eccentric and out of balance moment onto the column should be considered.

2.4.7 Example 13 – I-beam of different depths connecting to hollow section column with external ring plate

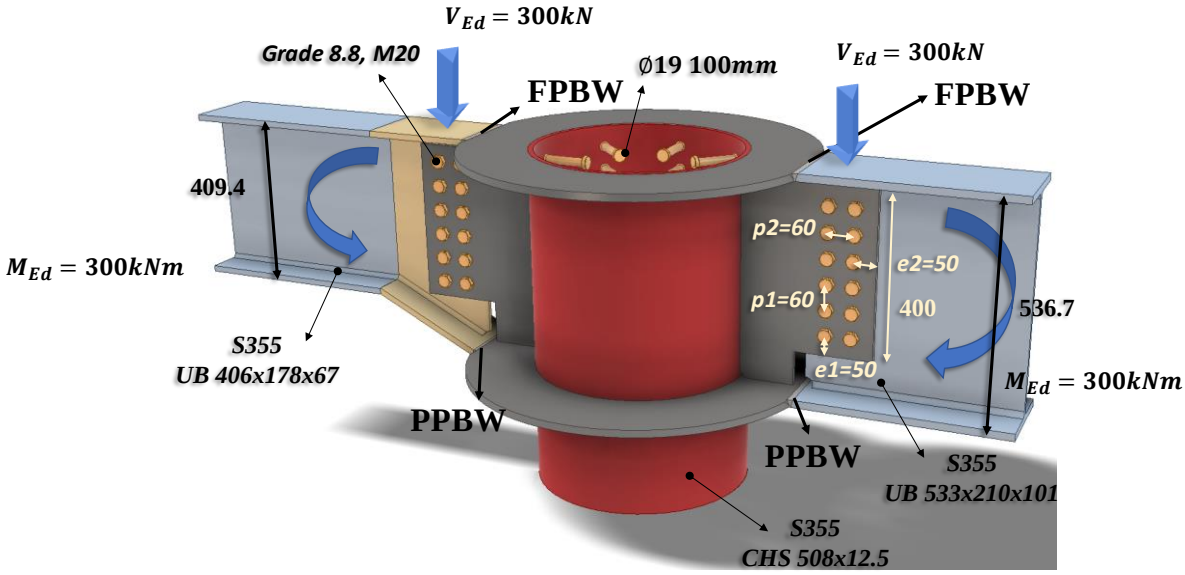

Check 1 – Bolt group resistance		
Ref	Calculations	Remark
	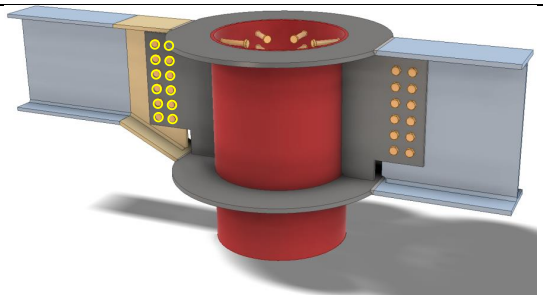 Assumption: The welds at the top and bottom flanges of the beam are designed to resist the design moment. The bolt group is designed to resist the design shear force.	
SS EN1993-1-8	**Bolt resistance:** Using Gr8.8, M20 bolts with: $A_s = 245mm^2; f_{ub} = 800MPa;$	
	Shear resistance of a single bolt: $F_{v,Rd} = \frac{\alpha_v f_{ub} A_s}{\gamma_{M2}}$ $= \frac{0.6 \times 800 \times 245}{1.25} \times 10^{-3}$ $= 94.08kN$	For class 8.8: $\alpha_v = 0.6$ $\gamma_{M2} = 1.25$ (refer to NA to SS)
SCI_P358 SN017	For two vertical lines of bolts ($n_2 = 2$): $l = \frac{n_1}{2} p_2^2 + \frac{1}{6} n_1 (n_1^2 - 1) p_1^2$ $= \frac{6}{2}(60^2) + \frac{1}{6}(6)(6^2 - 1)(60^2)$ $= 136800mm^2$ $\alpha = \frac{z p_2}{2l}$ $= \frac{100 \times 60}{2 \times 136800}$ $= 0.02$	$z = 100mm$ $\boldsymbol{e_1 = 50.0mm}$ $(1.2d_0 < e_1 < 4t + 40mm)$ $\boldsymbol{p_1 = 60.0mm}$ $(2.2d_0 < p_1 < 14t\ or\ 200mm)$ $\boldsymbol{e_2 = 50.0mm}$ $(1.2d_0 < e_2 < 4t + 40mm)$ $\boldsymbol{p_2 = 60.0mm}$ $(2.4d_0 < p_2 < 14t\ or\ 200mm)$

Check 1 – Bolt group resistance		
Ref	Calculations	Remark
	$\beta = \frac{zp_1}{2l}(n_1 - 1)$ $= \frac{100 \times 60}{2 \times 136800}(6 - 1)$ $= 0.11$ $n_1 = 6, n_2 = 2,\ n = 6 \times 2 = 12$ $V_{Rd} = \frac{nF_{V,Rd}}{\sqrt{(1+\alpha n)^2 + (\beta n)^2}}$ $= \frac{12 \times 94.08 \times 10^{-3}}{\sqrt{(1+0.02 \times 12)^2 + (0.11 \times 12)^2}}$ $= 618.96kN > V_{Ed} = 300kN$	OK!
SCI_P358 SS EN1993-1-8	**Bolt bearing resistance in the fin plate:** For bearing resistance in vertical direction of one bolt: $k_1 = \min\left(\frac{2.8e_2}{d_o} - 1.7; \frac{1.4p_2}{d_0} - 1.7; 2.5\right)$ $= \min\left(\frac{2.8 \times 50}{22} - 1.7; \frac{1.4 \times 60}{22} - 1.7; 2.5\right)$ $= 2.12$ $\alpha_b = \min\left(\frac{e_1}{3d_0}; \frac{p_1}{3d_0} - \frac{1}{4}; \frac{f_{ub}}{f_{u,p}}; 1.0\right)$ $= \min\left(\frac{50}{3 \times 22}; \frac{60}{3 \times 22} - \frac{1}{4}; \frac{800}{490}; 1.0\right)$ $= 0.66$ $F_{b,ver,Rd} = \frac{k_1 \alpha_b f_{u,p} d t_p}{\gamma_{M2}}$ $= \frac{2.12 \times 0.66 \times 490 \times 20 \times 12}{1.25} \times 10^{-3}$ $= 131.34kN$	$t_p = 12mm$

Check 1 – Bolt group resistance		
Ref	Calculations	Remark
	For bearing resistance in horizontal direction of one bolt: $k_1 = \min\left(\frac{2.8e_1}{d_o} - 1.7; \frac{1.4p_1}{d_0} - 1.7; 2.5\right)$ $= \min\left(\frac{2.8 \times 50}{22} - 1.7; \frac{1.4 \times 60}{22} - 1.7; 2.5\right)$ $= 2.12$ $\alpha_b = \min\left(\frac{e_2}{3d_0}; \frac{p_2}{3d_0} - \frac{1}{4}; \frac{f_{ub}}{f_{u,p}}; 1.0\right)$ $= \min\left(\frac{50}{3 \times 22}; \frac{60}{3 \times 22} - \frac{1}{4}; \frac{800}{430}; 1.0\right)$ $= 0.66$ $F_{b,hor,Rd} = \frac{k_1 \alpha_b f_{u,p} d t_p}{\gamma_{M2}}$ $= \frac{2.12 \times 0.66 \times 490 \times 20 \times 12}{1.25} \times 10^{-3}$ $= 131.34\text{kN}$ **Bolt group bearing resistance:** $V_{Rd} = \frac{n}{\sqrt{\left(\frac{1+\alpha n}{F_{b,ver,Rd}}\right)^2 + \left(\frac{\beta n}{F_{b,hor,Rd}}\right)^2}}$ $= \frac{12 \times 10^{-3}}{\sqrt{\left(\frac{1+0.02 \times 12}{131.34}\right)^2 + \left(\frac{0.11 \times 12}{131.34}\right)^2}}$ $= 864.11kN > V_{Ed} = 300kN$	OK!
SCI_P358 SS EN1993-1-8	**Bolt bearing resistance in secondary beam web:** Vertical bearing resistance: $k_1 = \min\left(\frac{2.8e_{2,b}}{d_o} - 1.7; \frac{1.4p_2}{d_0} - 1.7; 2.5\right)$ $= \min\left(\frac{2.8 \times 50}{22} - 1.7; \frac{1.4 \times 60}{22} - 1.7; 2.5\right)$ $= 2.12$	$e_{1,b} = 84.3mm$ $e_{2,b} = 50.0mm$ $t_{w,b1} = 8.8mm$

Check 1 – Bolt group resistance		
Ref	Calculations	Remark
	$\alpha_b = \min\left(\frac{e_{1,b}}{3d_0}; \frac{p_1}{3d_0} - \frac{1}{4}; \frac{f_{ub}}{f_{u,b1}}; 1.0\right)$ $= \min\left(\frac{84.3}{3 \times 22}; \frac{60}{3 \times 22} - \frac{1}{4}; \frac{800}{490}; 1.0\right)$ $= 0.66$ $F_{b,ver,Rd} = \frac{k_1 \alpha_b f_{u,b1} d t_{w,b1}}{\gamma_{M2}}$ $= \frac{2.12 \times 0.66 \times 490 \times 20 \times 8.8}{1.25} \times 10^{-3}$ $= 96.32kN$ Horizontal bearing resistance: $k_1 = \min\left(\frac{2.8e_{1,b}}{d_o} - 1.7; \frac{1.4p_1}{d_0} - 1.7; 2.5\right)$ $= \min\left(\frac{2.8 \times 84.3}{22} - 1.7; \frac{1.4 \times 60}{22} - 1.7; 2.5\right)$ $= 2.12$ $\alpha_b = \min\left(\frac{e_{2,b}}{3d_0}; \frac{p_2}{3d_0} - \frac{1}{4}; \frac{f_{ub}}{f_{u,b1}}; 1.0\right)$ $= \min\left(\frac{50}{3 \times 22}; \frac{60}{3 \times 22} - \frac{1}{4}; \frac{800}{490}; 1.0\right)$ $= 0.66$ $F_{b,hor,Rd} = \frac{k_1 \alpha_b f_{u,b1} d t_{w,b1}}{\gamma_{M2}}$ $= \frac{2.12 \times 0.66 \times 490 \times 20 \times 8.8}{1.25} \times 10^{-3}$ $= 96.32kN$	

Check 1 – Bolt group resistance		
Ref	Calculations	Remark
	Bolt group bearing resistance: $V_{Rd} = \frac{n}{\sqrt{\left(\frac{1+\alpha n}{F_{b,ver,Rd}}\right)^2 + \left(\frac{\beta n}{F_{b,hor,Rd}}\right)^2}}$ $= \frac{12 \times 10^{-3}}{\sqrt{\left(\frac{1+0.02\times 12}{96.32}\right)^2 + \left(\frac{0.11\times 12}{96.32}\right)^2}}$ $= 633.68kN > V_{Ed} = 300kN$	OK!

Check 2 – Fin plate resistance		
Ref	Calculations	Remark
SS EN1993 SCI_P358	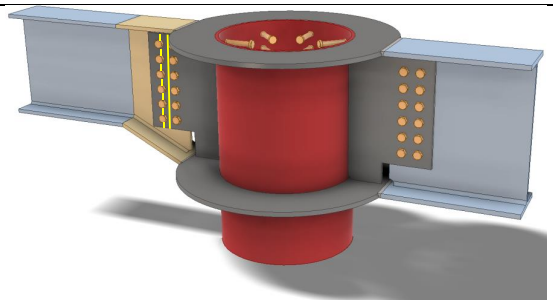 **Fin plate shear gross section resistance:** $V_{Rd,g} = \frac{h_p t_p}{1.27} \frac{f_{y,p}}{\sqrt{3}\gamma_{M0}}$ $= \frac{400 \times 12}{1.27} \times \frac{355}{\sqrt{3}} \times 10^{-3}$ $= 774.65kN$ **Fin plate shear net section resistance:** Net area: $A_{net} = (h_p - nd_0)t_p$ $= (400 - 6 \times 22) \times 12$ $= 3216mm^2$ $V_{Rd,n} = \frac{A_{net} f_{u,p}}{\sqrt{3}\gamma_{M2}}$ $= \frac{3216 \times 490}{\sqrt{3} \times 1.25} \times 10^{-3}$ $= 727.85kN$ **Fin plate shear block shear resistance:** Net area subject to tension: $A_{nt} = (p_2 + e_2 - 1.5d_0)t_p$ $= (60 + 50 - 1.5 \times 22) \times 12$ $= 924mm^2$ Net area subject to shear: $A_{nv} = (e_1 + (n-1)P_1 - (n - 0.5)d_0)t_p$ $= (50 + 5 \times 60 - 5.5 \times 22) \times 12$ $= 2748mm^2$	$h_p = 400.0mm$ $\gamma_{M0} = 1.0$ (SS EN1993-1-1)

Check 2 – Fin plate resistance		
Ref	Calculations	Remark
	$V_{Rd,b} = \frac{0.5 f_{u,p} A_{nt}}{\gamma_{M2}} + \frac{f_{y,p} A_{nv}}{\sqrt{3}\gamma_{M0}}$ $= \left(\frac{0.5 \times 490 \times 924}{1.25} + \frac{355 \times 2748}{\sqrt{3}}\right) \times 10^{-3}$ $= 744.33kN$ **Shear resistance of fin plate:** $V_{Rd} = \min\left(V_{Rd,g}, V_{Rd,n}, V_{Rd,b}\right)$ $= \min(774.65, 727.85, 744.33)$ $= 727.85kN > V_{Ed} = 300kN$	OK!

Check 3 – Secondary beam web shear resistance		
Ref	Calculations	Remark
SS EN1993 SCI_P358	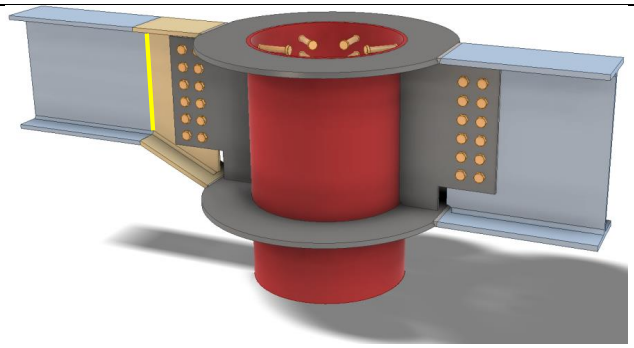 Shear area of secondary beam: $A_v = A_g - 2t_f b_f - 2r_w t_w$ $= 8550 - 2 \times 14.3 \times 178.8 - 2 \times 20 \times 8.8$ $= 3084.32mm^2$ $V_{Rd} = \frac{A_v f_{y,b}}{\sqrt{3}\gamma_{M0}}$ $= \frac{3084.32 \times 355}{\sqrt{3}} \times 10^{-3}$ $= 632.16kN > V_{Ed} = 300kN$	Weld access hole: $r_w = 20mm$ For UB406x178x67 $A_g = 8550mm^2$ $b_f = 178.8mm$ $t_f = 14.3mm$ OK!

Check 4 – Haunch resistance		
Ref	Calculations	Remark
SCI_P358 SS EN1993	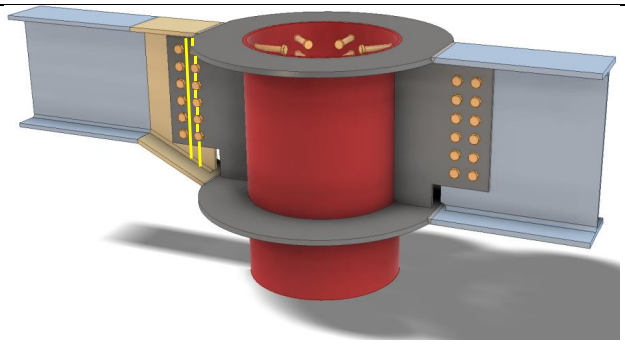 **Haunch shear resistance:** In order to reduce stress concentration, the thicknesses of flange and web are same as secondary beam UB406x178x67. Gross section: $V_{Rd,g} = \frac{h_h t_w f_{y,w}}{\sqrt{3}\gamma_{M0}}$ $= \frac{468.1 \times 8.8 \times 355}{\sqrt{3}} \times 10^{-3}$ $= 844.28kN$ Net section: Net shear area: $A_{v,net} = h_h t_w - nd_0 t_w$ $= 468.1 \times 8.8 - 6 \times 22 \times 8.8$ $= 2957.68mm^2$ $V_{Rd,n} = \frac{A_{v,net} f_{u,w}}{\sqrt{3}\gamma_{M2}}$ $= \frac{2957.68 \times 490}{\sqrt{3} \times 1.25} \times 10^{-3}$ $= 669.39kN$	$h_h = 468.1mm$ (Depth of haunch at bolt line) $\gamma_{M0} = 1.0$ (SS EN1993-1-1)

Check 4 – Haunch resistance		
Ref	Calculations	Remark
	Shear resistance of haunch web: $V_{Rd} = \min(V_{Rd,g}, V_{Rd,n})$ $= \min(844.28, 669.39)$ $= 669.39kN > V_{Ed} = 300kN$	OK!
SCI_P358	For **short fin plate**, **shear and bending moment interaction check** is not necessary for haunch web. 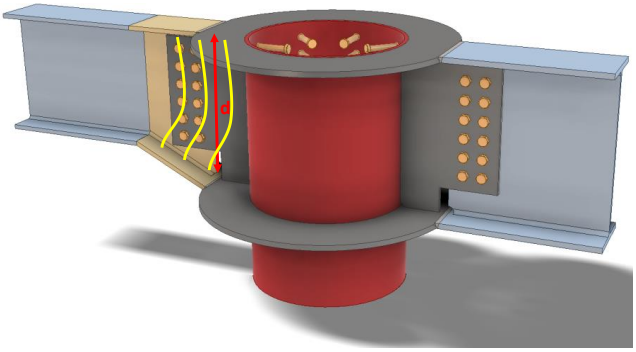	
SS EN1993-1-5	**Shear buckling resistance of haunch web:** To check the shear buckling resistance of the haunch web, the largest height of the haunch was taken as the depth for calculation. The haunch was checked using similar method of checking rectangular girder. $\frac{72\varepsilon}{\eta} = \frac{72(0.8136)}{1.0} = 58.58$ $\frac{d}{t_w} = \frac{508.1}{8.8} = 57.74 < \frac{72\varepsilon}{\eta}$ ∴ The haunch web is **NOT** susceptible to **shear buckling**, shear buckling check is not necessary	Depth of web: $d = 508.1mm$ $\varepsilon = \sqrt{235/f_{yw}}$ $= \sqrt{235/355}$ $= 0.8136$

Check 5 – Weld resistance of beam flange		
Ref	Calculations	Remark
	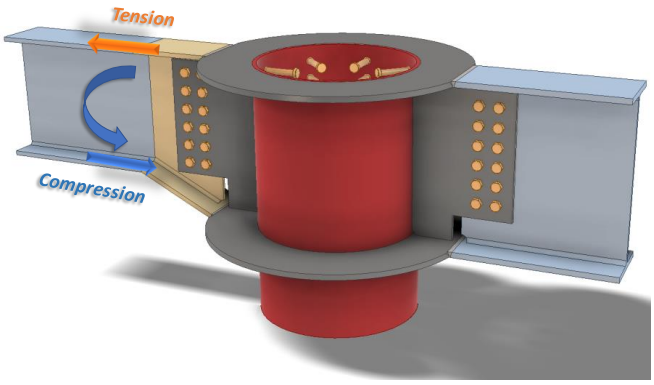	
SS EN1993	Assume the moment is resisted by the flanges of the secondary beam. The thickness of the diaphragm ring is same as the beam flange. The beam flange tensile resistance is: $F_{Rd,flange} = \frac{t_f b_f f_{y,bf}}{\gamma_{M0}}$ $= \frac{14.3 \times 178.8 \times 355}{1.0} \times 10^{-3}$ $= 907.68kN$ Moment arm: $r = h_b - t_{f,b}$ $= 409.4 - 14.3$ $= 395.1mm$ Tensile force on flange: $F_{Ed} = \frac{M_{Ed}}{r}$ $= \frac{300}{395.1} \times 10^3$ $= 759.3kN < F_{Rd,flange} = 907.68kN$	
BS 5950-1 6.9.2	**Partial penetration butt weld resistance:** The minimum throat size of a longitudinal partial penetration butt weld should be $2\sqrt{t}$ (in mm), where t is the thickness of the thinner part of joint.	
SS EN1993-1-1 4.7.2 (1)	The design resistance of a partial penetration butt weld should be determined using the method for a deep penetration fillet weld.	

Check 5 – Weld resistance of beam flange		
Ref	Calculations	Remark
	In this example, the angle between the transverse force and weld throat $\theta = 90°$. Provided the groove angle is greater than 60° or U-butt is adopted, the throat thickness is equal to the depth of penetration. 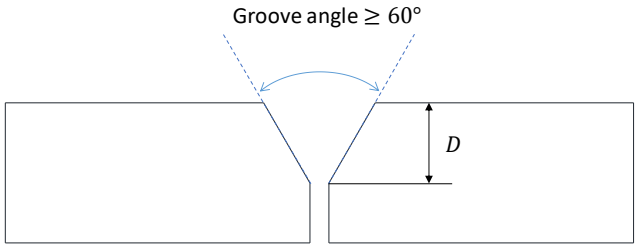 Choose partial butt weld with 14mm ($> 2\sqrt{14.3} = 7.56mm$) throat thickness and grade S355 which match the beam material properties: Transverse resistance: $F_{w,T,Rd} = \frac{0.9f_u}{\gamma_{M2}}a$ $= 0.9 \times 470 \times \frac{14}{1.25} \times 10^{-3}$ $= 4.74kN/mm$ Tensile resistance of the PPBW: $F_{Rd} = F_{w,T,Rd}b_f$ $= 4.74 \times 178.8$ $= 847.51kN > F_{Ed} = 759.3kN$	f_u: ultimate strength $= 410MPa$ for S275 $= 470MPa$ for S355 a: throat thickness $\gamma_{M2} = 1.25$ OK!

Check 6 – External diaphragm ring check		
Ref	Calculations	Remark
CIDECT design guide 9	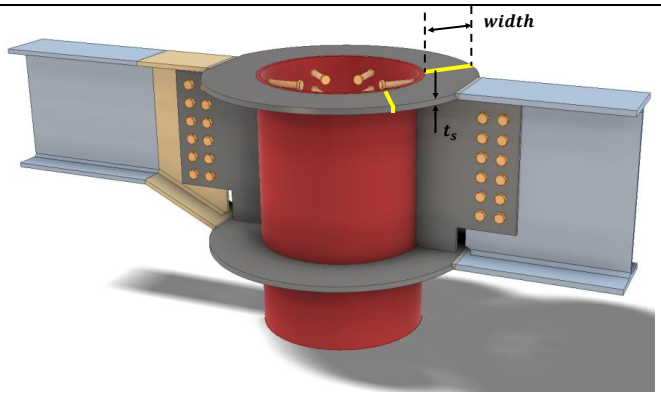 Basic properties: Diameter of CHS column: $d_c = 508mm$ Thickness of CHS column: $t_c = 16mm$ Width of diaphragm ring: $b_d = 50mm$ Thickness of diaphragm ring: $t_d = 15mm > t_f$ Yield strength of column: $f_{yc} = 355MPa$ Axial resistance of diaphragm ring: $N_{Rd} = 19.6\left(\frac{d_c}{t_c}\right)^{-1.54}\left(\frac{b_d}{d_c}\right)^{0.14}\left(\frac{t_d}{t_c}\right)^{0.34}\left(\frac{d_c}{2}\right)^{2} f_{yc}$ $= 19.6\left(\frac{508}{16}\right)^{-1.54}\left(\frac{50}{508}\right)^{0.14}\left(\frac{15}{16}\right)^{0.34}\left(\frac{508}{2}\right)^{2}$ $\times 355 \times 10^{-3}$ $= 1545.15kN > F_{Ed} = 759.3kN$ Range of validity: $14 < \frac{d_c}{t_c} = \frac{508}{16} = 31.75 < 36$ $0.05 < \frac{b_d}{d_c} = \frac{50}{508} = 0.10 < 0.14$ $0.75 < \frac{t_d}{t_c} = \frac{15}{16} = 0.9375 < 2.0$	OK!

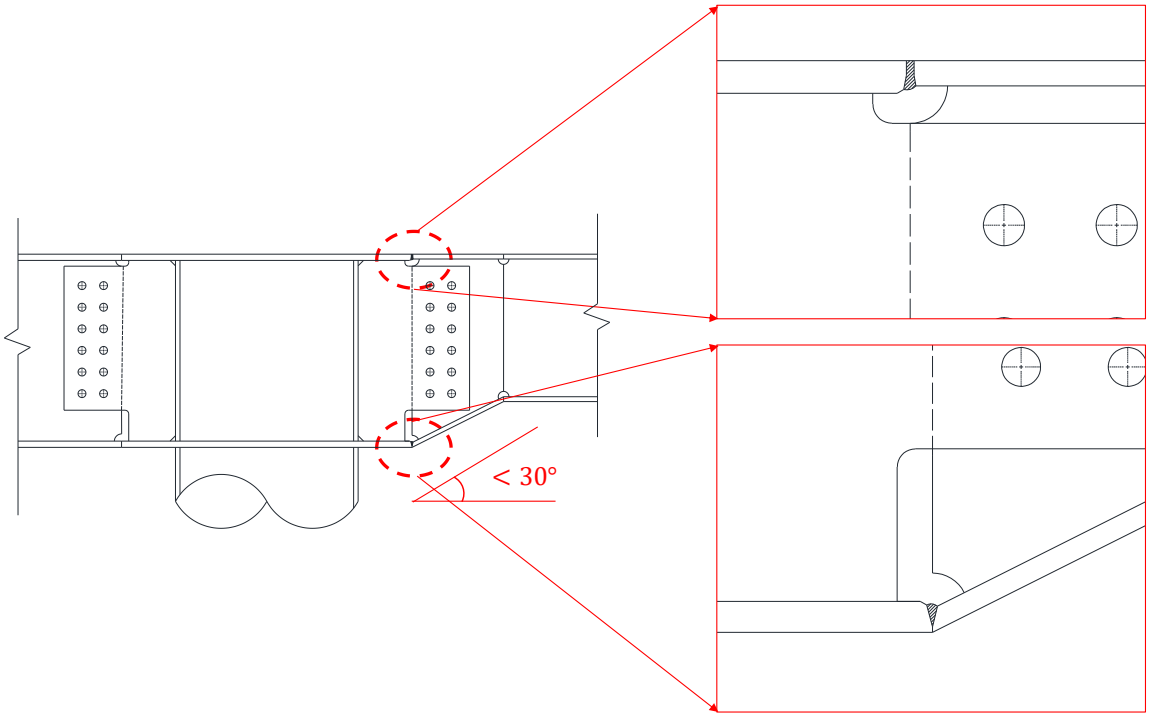

Figure 2-5 Example of transition between diaphragm plate and beam flange

Note: As the thickness of diaphragm plate is different from that of the haunch, transition between 30° to 45° is necessary at the weld region to minimize the stress concentration as shown in Figure *2-5*.

In addition, the thickness of the external diaphragm plate may be slightly thicker (adopt 15mm) to provide tolerance for positioning the secondary beam.

Check 7 – Weld group of fin plate (Two-side C shape fillet weld)		
Ref	Calculations	Remark
SS EN1993-1-8	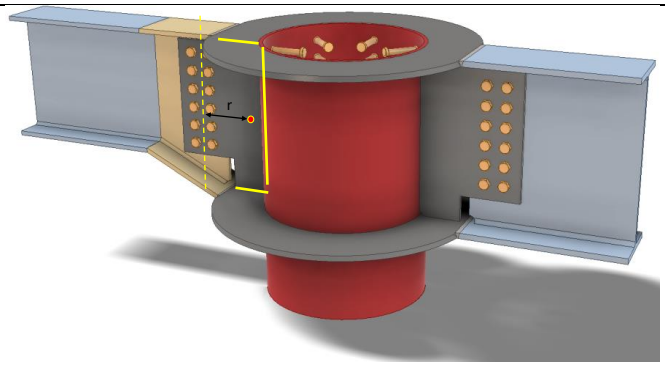 Location of center of gravity of welds group: $\bar{x} = \frac{b^2}{(2b + d)}$ $= \frac{130^2}{(2 \times 130 + 476.5)}$ $= 22.95mm$ $\bar{y} = \frac{d}{2}$ $= \frac{476.5}{2}$ $= 238.25mm$ Unit throat area: $A_u = 2b' + d'$ $= 2 \times 115 + 446.5$ $= 676.5mm$ Moment arm between applied force and weld center: $r = 236.07mm$ Induced moment on welds: $M = \frac{V_{Ed}}{2} r$ $= \frac{300}{2} \times 236.07$ $= 35410.5kNmm$	Length of fillet weld: Width: $b = 130mm$ Depth: $d = 476.5mm$ Cope hole size: $n = 15mm$ $b' = b - n$ $= 130 - 15$ $= 115mm$ $d' = d - 2n$ $= 476.5 - 2 \times 15$ $= 446.5mm$

Check 7 – Weld group of fin plate (Two-side C shape fillet weld)		
Ref	Calculations	Remark
	Polar moment of inertia: $J = \frac{8b'^3 + 6b'd'^2 + d'^3}{12} - \frac{b'^4}{2b' + d'}$ $= \frac{8 \times 115^3 + 6 \times 115 \times 446.5^2 + 446.5^3}{12}$ $- \frac{115^4}{2 \times 115 + 446.5}$ $= 19636646mm^3$ **Critical point:** Horizontal distance from centroid: $r_{zh} = b - \bar{x}$ $= 130 - 22.95$ $= 107.05mm$ Vertical distance from centroid: $r_{zv} = \bar{y}$ $= 238.25mm$ Vertical stress: $\tau_v = \frac{V_{Ed}}{A_u} + \frac{Mr_{zh}}{J}$ $= \frac{300}{2 \times 676.5} + \frac{35410.5 \times 107.05}{19636646}$ $= 0.415kN/mm$ Horizontal stress: $\tau_h = \frac{Mr_{zv}}{J}$ $= \frac{35410.5 \times 238.25}{19636646}$ $= 0.430kN/mm$ Resultant stress: $\tau_r = \sqrt{r_v^2 + r_h^2}$ $= \sqrt{0.415^2 + 0.430^2}$ $= 0.60kN/mm$	

Check 7 – Weld group of fin plate (Two-side C shape fillet weld)		
Ref	Calculations	Remark
SCI_P363	Choose fillet weld with 8mm leg length, 5.6mm throat thickness and grade S355 which match beam steel grade: Longitudinal resistance: $F_{w,L,Rd} = 1.35kN/mm$ Transverse resistance: $F_{w,T,Rd} = 1.65kN/mm$ **Simplified method:** $F_{w,L,Rd} = 1.35kN/mm > \tau_r = 0.60kN/mm$ **Directional method:** $SF = \left(\frac{\tau_v}{F_{w,L,Rd}}\right)^2 + \left(\frac{\tau_h}{F_{w,T,Rd}}\right)^2$ $= \left(\frac{0.415}{1.35}\right)^2 + \left(\frac{0.430}{1.65}\right)^2$ $= 0.16 < 1.0$	 OK! OK!

Check 8 – Column capacity check		
Ref	Calculations	Remark
	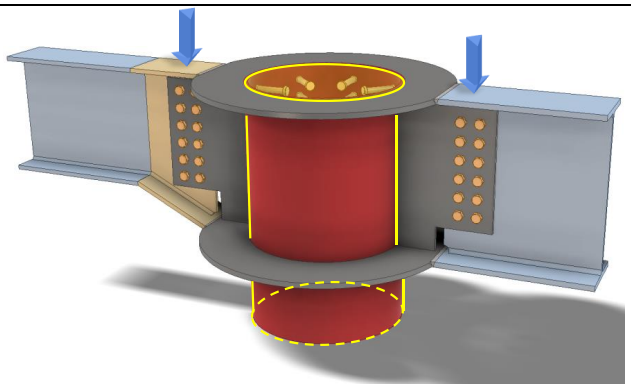	
SS EN1994	The reaction force from the beam is transferred to the composite column via the steel tube. The force acting on the concrete may be assumed to be proportional to the cross section axial resistance: $N_{cs,Ed} = (N_{Ed1} + N_{Ed2})\left(1 - \frac{N_{a,Rd}}{N_{pl,Rd}}\right)$ $= (500 + 300) \times (1 - \frac{8770}{14703.66})$ $= 322.84kN$	$N_{a,Rd}$:Steel section axial resistance $N_{a,Rd} = 8770kN$ $N_{pl,Rd}$:Axial resistance of composite column $N_{pl,Rd}$ $= 14703.66kN$
	The longitudinal shear stress at the surface of the steel section: $\tau_{Ed} = \frac{N_{cs,Ed}}{u_a l_v}$ $= \frac{322.84 \times 10^3}{1495 \times 952}$ $= 0.23MPa$ For Concrete-filled circular sections, the bond resistance is: $\tau_{Rd} = 0.55MPa > \tau_{Ed} = 0.23MPa$ As the shear capacity between steel and concrete is sufficient, shear stud may not be necessary in this case	u_a:Perimeter of the section $u_a = \pi(D - 2t)$ $= \pi \times (508 - 32)$ $= 1495mm$ l_v:Load introduction length (According to EC4, the introduction length should not exceed 2d or L/3, where d is the minimum transverse dimension of the column and L is the column length) Assume: $l_v = 2(D - 2t)$ $= 2(508 - 32)$ $= 952mm$

Check 8 – Column capacity check		
Ref	Calculations	Remark
SCI_P358	Local shear resistance of column: Shear area: $A_v = h_p t_2$ $= 400 \times 16$ $= 6000mm^2$ $F_{Rd} = \frac{A_v f_{y,2}}{\sqrt{3}\gamma_{M0}}$ $= \frac{6000 \times 355}{\sqrt{3}} \times 10^{-3}$ $= 1229.76kN > V_{Ed} = 300kN$	OK!
SS EN1994	Note: A conservative assumption is to assume that the bond is not effective in transferring the beam force to the concrete. The force acting on the concrete is designed to be resisted by shear studs. Shear capacity of shear stud: For h/d = 5.26 > 4, $\alpha = 1.0$ $P_{Rd} = \min\left(\frac{0.8 f_u \left(\frac{\pi d^2}{4}\right)}{\gamma_{Mv}}; \frac{0.29\alpha d^2 (f_{ck} E_{cm})^{\frac{1}{2}}}{\gamma_{Mv}}\right)$ $= \min\left(\frac{0.8 \times 450 \times \left(\frac{\pi 19^2}{4}\right)}{1.25} \times 10^{-3};\right.$ $\left.\frac{0.29 \times 1.0 \times 19^2 \times (40 \times 35000)^{\frac{1}{2}}}{1.25} \times 10^{-3}\right)$ $= 81.66kN$ Total resistance: $V_{Rd} = nP_{Rd} + 2R$ ∴ number of shear studs required assuming zero bond resistance: $n = \frac{N_{cs,Ed}}{P_{Rd}} = \frac{322.84}{81.66} = 4$ ∴ use 4 studs.	d:diameter of the shank of the stud $d = 19mm$ f_{ck}:characteristic cylinder strength of the concrete $f_{ck} = 40MPa$ f_u:ultimate strength of the stud $f_u = 450MPa$ h:overall height of the stud $h = 100mm$ E_{cm}:Secant modulus of the concrete $E_{cm} = 35000MPa$ γ_{Mv}:partial safety factor =1.25 R should not be considered in this case as it is applicable to concrete encased section SS EN1994-1-1, 6.7.4.2(4)

Note: The eccentric and out of balance moment onto the column should be considered.

2.4.8 Example 14 – Beam-to-Column connection (moment-resisting connection) bending about the major axis of the column with different beam depths

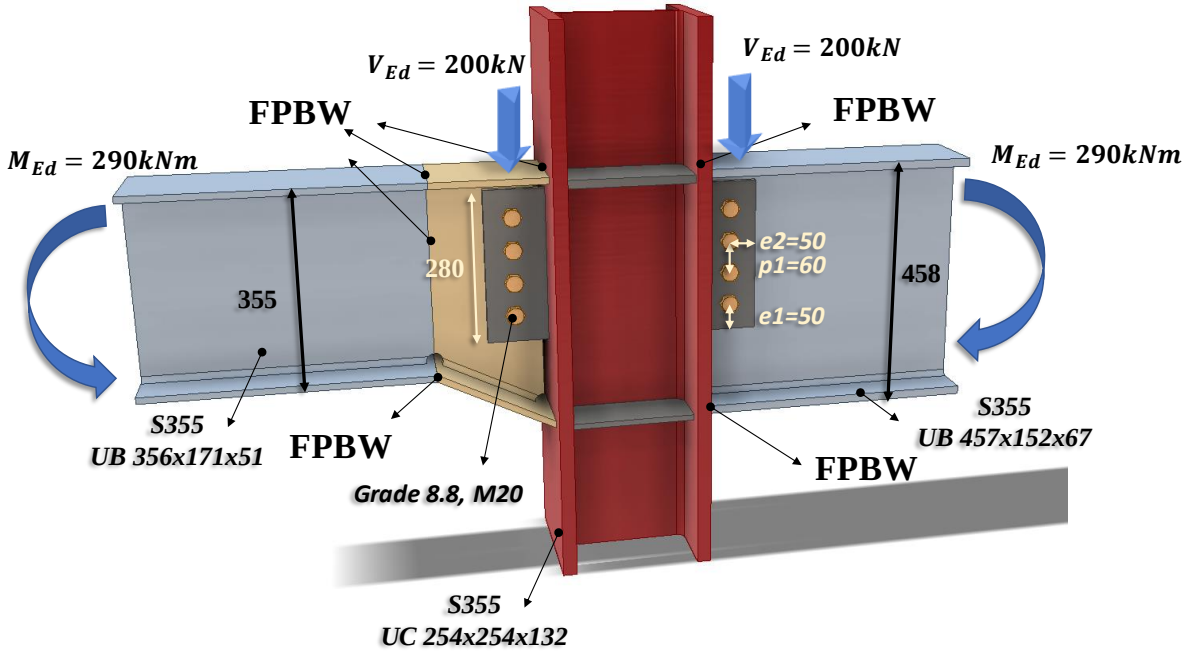

Check 1 – Bolt group resistance		
Ref	Calculations	Remark
SS EN1993-1-8	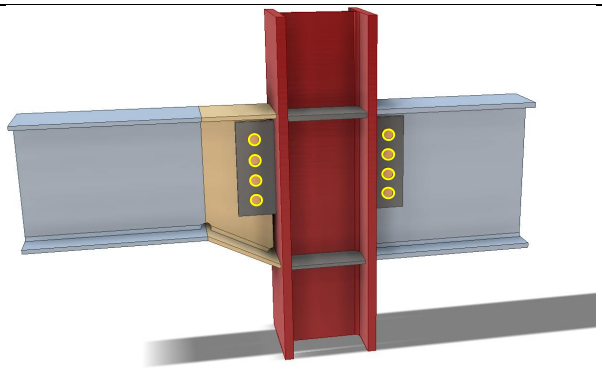 **Bolt resistance:** Using Gr8.8, M20 bolts with: $A_s = 245mm^2; f_{ub} = 800MPa;$ **Shear resistance of a single bolt:** $F_{v,Rd} = \frac{\alpha_v f_{ub} A_s}{\gamma_{M2}}$ $= \frac{0.6 \times 800 \times 245}{1.25} \times 10^{-3}$ $= 94.08kN$ For single vertical line of bolts ($n_2 = 1$): $n_1 = 4, n = 4 \times 1 = 4$ $\alpha = 0$ $\beta = \frac{6z}{n_1(n_1+1)p_1}$ $= \frac{6 \times 60mm}{4 \times (4+1) \times 60mm}$ $= 0.30$ $V_{Rd} = \frac{nF_{V,Rd}}{\sqrt{(1+\alpha n)^2 + (\beta n)^2}}$ $= \frac{4 \times 94.08}{\sqrt{(1+0)^2 + (0.3 \times 4)^2}} \times 10^{-3}$ $= 240.91kN > V_{Ed} = 200kN$	For class 8.8: $\alpha_v = 0.6$ $\gamma_{M2} = 1.25$ (refer to NA to SS) $z = 60.00mm$ OK!

Check 1 – Bolt group resistance		
Ref	Calculations	Remark
	Bearing resistance on fin plate: For bearing resistance in vertical direction of one bolt: $\alpha_b = \min\left(\frac{e_1}{3d_0}; \frac{p_1}{3d_0} - \frac{1}{4}; \frac{f_{ub}}{f_u}; 1.0\right)$ $= \min\left(\frac{50}{3 \times 22}; \frac{60}{3 \times 22} - \frac{1}{4}; \frac{800}{490}; 1.0\right)$ $= 0.66$ $k_1 = \min\left(\frac{2.8e_2}{d_0} - 1.7; \frac{1.4p_2}{d_0} - 1.7; 2.5\right)$ $= \min\left(\frac{2.8 \times 50}{22} - 1.7; 2.5\right)$ $= 2.5$ $F_{b,ver,Rd} = \frac{k_1 \alpha_b f_{u,p} d t_p}{\gamma_{M2}}$ $= \frac{2.5 \times 0.6591 \times 490 \times 20 \times 12}{1.25}$ $= 155.02kN$ For bearing resistance in horizontal direction of one bolt: $k_1 = \min\left(\frac{2.8e_1}{d_o} - 1.7; \frac{1.4p_1}{d_0} - 1.7; 2.5\right)$ $= \min\left(\frac{2.8 \times 50}{22} - 1.7; \frac{1.4 \times 60}{22} - 1.7; 2.5\right)$ $= 2.12$ $\alpha_b = \min\left(\frac{e_2}{3d_0}; \frac{p_2}{3d_0} - \frac{1}{4}; \frac{f_{ub}}{f_{u,p}}; 1.0\right)$ $= \min\left(\frac{50}{3 \times 22}; \frac{800}{490}; 1.0\right)$ $= 0.76$	$\boldsymbol{e_1 = 50.0mm}$ $(1.2d_0 < e_1 < 4t + 40mm)$ $\boldsymbol{p_1 = 60.0mm}$ $(2.2d_0 < p_1 < 14t\ or\ 200mm)$ $\boldsymbol{e_2 = 50.0mm}$ $(1.2d_0 < e_2 < 4t + 40mm)$ $\boldsymbol{p_2 = nil}$ $(2.4d_0 < p_2 < 14t\ or\ 200mm)$ $t_p = 12.0mm$ $t_{tab} < 16mm$ $f_{u,p} = 490MPa$ $f_{y,p} = 355MPa$

Check 1 – Bolt group resistance		
Ref	Calculations	Remark
	$F_{b,hor,Rd} = \frac{k_1 \alpha_b f_{u,p} d t_p}{\gamma_{M2}}$ $= \frac{2.12 \times 0.76 \times 490 \times 20 \times 12}{1.25} \times 10^{-3}$ $= 150.97\text{kN}$ **Bolt group bearing resistance:** $V_{Rd} = \frac{n}{\sqrt{\left(\frac{1+\alpha n}{F_{b,ver,Rd}}\right)^2 + \left(\frac{\beta n}{F_{b,hor,Rd}}\right)^2}}$ $= \frac{4}{\sqrt{\left(\frac{1}{155.02}\right)^2 + \left(\frac{0.3 \times 4}{150.97}\right)^2}} \times 10^{-3}$ $= 390.74N > V_{Ed} = 200kN$	OK!
	Bearing resistance on beam web (UB457x152x67): Vertical bearing resistance: $\alpha_b = \min\left(\frac{e_{1,b}}{3d_0}; \frac{p_{1,b}}{3d_0} - \frac{1}{4}; \frac{f_{ub}}{f_{u,b}}; 1.0\right)$ $= \min\left(\frac{80}{3 \times 22}; \frac{60}{3 \times 22} - \frac{1}{4}; \frac{800}{490}; 1.0\right)$ $= 0.66$ $k_1 = \min\left(\frac{2.8 e_{2,b}}{d_0} - 1.7; 2.5\right)$ $= \min\left(\frac{2.8 \times 50}{22} - 1.7; 2.5\right)$ $= 2.5$ $F_{b,ver,Rd} = \frac{k_1 \alpha_b f_{u,b} d t_{w,b1}}{\gamma_{M2}}$ $= \frac{2.5 \times 0.6591 \times 490 \times 20 \times 9.0}{1.25}$ $= 116.26kN$	$\boldsymbol{e_{1,b} = 80.0mm}$ $\boldsymbol{p_{1,b} = 60.0mm}$ $\boldsymbol{e_{2,b} = 50.0mm}$ $\boldsymbol{p_{2,b} = nil}$ $t_{w,b1} = 9.0mm$ $t_{w,b1} < 16mm$ $f_{u,b} = 490MPa$ $f_{y,b} = 355MPa$

Check 1 – Bolt group resistance		
Ref	Calculations	Remark
	Horizontal bearing resistance: $k_1 = \min\left(\frac{2.8e_{1,b}}{d_o} - 1.7; \frac{1.4p_1}{d_0} - 1.7; 2.5\right)$ $= \min\left(\frac{2.8 \times 85}{22} - 1.7; \frac{1.4 \times 60}{22} - 1.7; 2.5\right)$ $= 2.12$ $\alpha_b = \min\left(\frac{e_{2,b}}{3d_0}; \frac{p_2}{3d_0} - \frac{1}{4}; \frac{f_{ub}}{f_{u,b1}}; 1.0\right)$ $= \min\left(\frac{50}{3 \times 22}; \frac{800}{490}; 1.0\right)$ $= 0.76$ $F_{b,hor,Rd} = \frac{k_1 \alpha_b f_{u,b1} d t_{w,b1}}{\gamma_{M2}}$ $= \frac{2.12 \times 0.76 \times 490 \times 20 \times 9.0}{1.25} \times 10^{-3}$ $= 113.23kN$ **Bolt group bearing resistance:** $V_{Rd} = \frac{n}{\sqrt{\left(\frac{1+\alpha n}{F_{b,ver,Rd}}\right)^2 + \left(\frac{\beta n}{F_{b,hor,Rd}}\right)^2}}$ $= \frac{4}{\sqrt{\left(\frac{1}{116.26}\right)^2 + \left(\frac{0.3 \times 4}{113.23}\right)^2}} \times 10^{-3}$ $= 293.06kN > V_{Ed} = 200kN$	OK!

Check 2 – Fin plate resistance		
Ref	Calculations	Remark
SS EN1993 SCI_P358	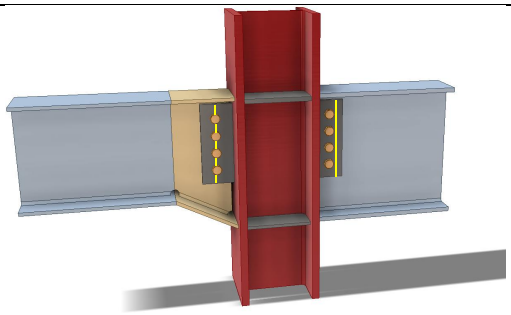 **Fin plate shear gross section resistance:** $V_{Rd,g} = \frac{h_p t_p}{1.27} \frac{f_{y,p}}{\sqrt{3}\gamma_{M0}}$ $= \frac{280 \times 12}{1.27} \times \frac{355}{\sqrt{3}} \times 10^{-3}$ $= 542.25kN$ **Fin plate shear net section resistance:** Net area: $A_{net} = (h_p - nd_0)t_p$ $= (280 - 4 \times 22) \times 12$ $= 2304mm^2$ $V_{Rd,n} = \frac{A_{net} f_{u,p}}{\sqrt{3}\gamma_{M2}}$ $= \frac{2304 \times 490}{\sqrt{3} \times 1.25} \times 10^{-3}$ $= 521.44kN$ **Fin plate shear block shear resistance:** Net area subject to tension: $A_{nt} = (e_2 - 0.5d_0)t_p$ $= (50 - 0.5 \times 22) \times 12$ $= 468mm^2$ Net area subject to shear: $A_{nv} = (e_1 + (n-1)P_1 - (n-0.5)d_0)t_p$ $= (50 + 3 \times 60 - 3.5 \times 22) \times 12$ $= 1968mm^2$	$h_p = 280.0mm$ $\gamma_{M0} = 1.0$ (SS EN1993-1-1)

Check 2 – Fin plate resistance		
Ref	Calculations	Remark
	$V_{Rd,b} = \frac{0.5 f_{u,p} A_{nt}}{\gamma_{M2}} + \frac{f_{y,p} A_{nv}}{\sqrt{3}\gamma_{M0}}$ $= \left(\frac{0.5 \times 490 \times 468}{1.25} + \frac{355 \times 1968}{\sqrt{3}}\right) \times 10^{-3}$ $= 495.09kN$ **Shear resistance of fin plate:** $V_{Rd} = \min\left(V_{Rd,g}, V_{Rd,n}, V_{Rd,b}\right)$ $= \min(542.25, 521.44, 495.09)$ $= 495.09kN > V_{Ed} = 200kN$	OK!

Check 3a – Beam web (UB457x152x67)		
Ref	Calculations	Remark
SS EN1993 SCI_P358	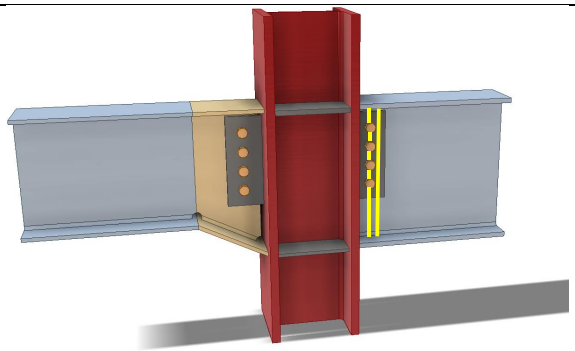 **Beam web gross section resistance:** For UB457x152x67: Cross-section area, $A_g = 8560mm^2$ Flange width, $b_f = 153.8mm$ Flange thickness, $t_f = 15.0mm$ Root radius, $r = 10.2mm$ Shear area: $A_v = A_g - 2t_f b_f + (t_w + 2r)t_f$ $= 8560 - 2 \times 15 \times 153.8 + (9.0 + 2 \times 10.2) \times 15$ $= 4387mm^2$ $V_{Rd,g} = \frac{A_v f_{y,b1}}{\sqrt{3}\gamma_{M0}}$ $= \frac{4387 \times 355}{\sqrt{3}} \times 10^{-3}$ $= 899.16kN$ **Beam web net section:** Area of net section: $A_{net} = A_v - nd_0 t_{w,b}$ $= 4387 - 4 \times 22 \times 9.0$ $= 3595mm^2$ $V_{Rd,n} = \frac{A_{v,net} f_{u,b}}{\sqrt{3}\gamma_{M2}}$ $= \frac{3595 \times 490}{\sqrt{3} \times 1.25} \times 10^{-3}$ $= 813.63kN$	

Check 3a – Beam web (UB457x152x67)		
Ref	Calculations	Remark
	Shear resistance of beam web: $V_{Rd} = \min(V_{Rd,g}, V_{Rd,n})$ $= \min(899.16, 813.63)$ $= 813.63kN > V_{Ed} = 200kN$	OK!

Check 3b – Beam web resistance (UB356x171x51)		
Ref	Calculations	Remark
SS EN1993 SCI_P358	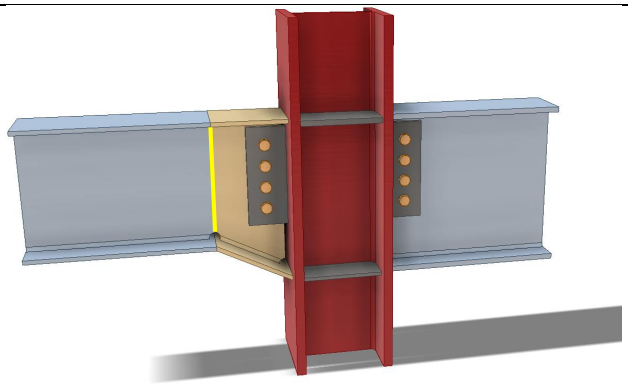 **Beam web gross section resistance:** Shear area: $A_v = A_g - 2t_f b_f - 2t_w r_w$ $= 6490 - 2 \times 11.5 \times 171.5 - 2 \times 7.4 \times 15$ $= 2323.5mm^2$ $V_{Rd} = \frac{A_v f_{y,b}}{\sqrt{3}\gamma_{M0}}$ $= \frac{2323.5 \times 355}{\sqrt{3}} \times 10^{-3}$ $= 476.22kN > V_{Ed} = 200kN$	For UB356x171x51: Cross-section area, $A_g = 6490mm^2$ Flange width, $b_f = 171.5mm$ Flange thickness, $t_f = 11.5mm$ Root radius, $r = 10.2mm$ Weld access hole size, $r_w = 15mm$

Check 4 – Tension zone check		
Ref	Calculations	Remark
	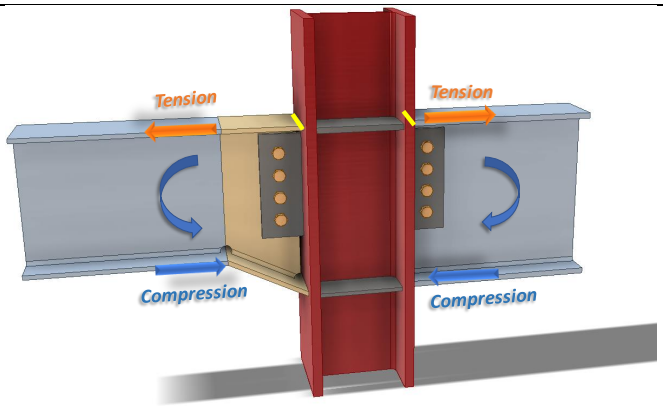	
SCI_P398	For column 254x254x132: Depth, $h_c = 276.3mm$ Width, $b_c = 261.3mm$ Flange thickness, $t_{fc} = 25.3mm$ Web thickness, $t_{wc} = 15.3mm$ Root radius, $r_c = 12.7mm$ Depth between flanges, $h_{wc} = 225.7mm$ Yield strength, $f_{yc} = 355MPa$ Ultimate strength, $f_{uc} = 490MPa$ The design force acting on the top and bottom flanges of the beam is $F_{Ed} = \frac{M_{Ed}}{h_b - t_{fb}}$ For beam 1 (UB 457x152x67): $h_{b1} = 458mm$ $F_{Ed1} = \frac{290}{458 - 15} \times 10^3 = 654.63kN$ $k = \left(\frac{t_{fc}}{t_{fb}}\right)\left(\frac{f_{yc}}{f_{yb}}\right) \leq 1$ for beam 1 UB 457x152x67: $k = \left(\frac{25.3}{15}\right)\left(\frac{355}{355}\right) = 1.69 > 1.0$ $\therefore k = 1$	

Check 4 – Tension zone check		
Ref	Calculations	Remark
	For beam 1: Effective width of the beam: $b_{eff} = t_{wc} + 2r_c + 7kt_{fc}$ $= 15.3 + 2 \times 12.7 + 7 \times 1 \times 25.3$ $= 217.8mm > b_{fb} = 153.8mm$ $\therefore b_{eff} = 153.8mm > \left(\frac{f_{yb}}{f_{ub}}\right) b_b = 107.06mm$ $F_{fc,Rd1} = \frac{b_{eff} t_{fb} f_{y,b}}{\gamma_{M0}}$ $= \frac{153.8 \times 15 \times 355}{1.0} \times 10^{-3}$ $= 818.99kN > F_{Ed1} = 654.63kN$ If resistance is insufficient, tension stiffener is needed 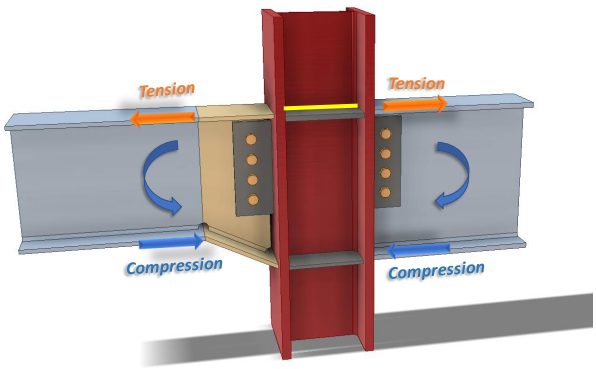 **Column web in tension:** Effective length of web: $b_{eff,t,wc} = t_{fb} + 2s_f + 5(t_{fc} + s)$ Assuming 10 mm leg length weld with $s_f = 10mm$ Assuming the moment on both side is same, $\beta_1 = \beta_2 = 0$ $\therefore \omega = 1$	OK!

Check 4 – Tension zone check		
Ref	Calculations	Remark
	For beam 1: $b_{eff,t,wc1} = 15 + 2 \times 10 + 5 \times (25.3 + 12.7)$ $= 225mm$ $F_{t,wc,Rd1} = \frac{\omega b_{eff,t,wc1} t_{wc} f_{yc}}{\gamma_{M0}}$ $= \frac{1 \times 225 \times 15.3 \times 355}{1.0} \times 10^{-3}$ $= 1222.09kN > F_{Ed1} = 654.63kN$	OK!

Check 5 – Compression zone check		
Ref	Calculations	Remark
SCI_P398	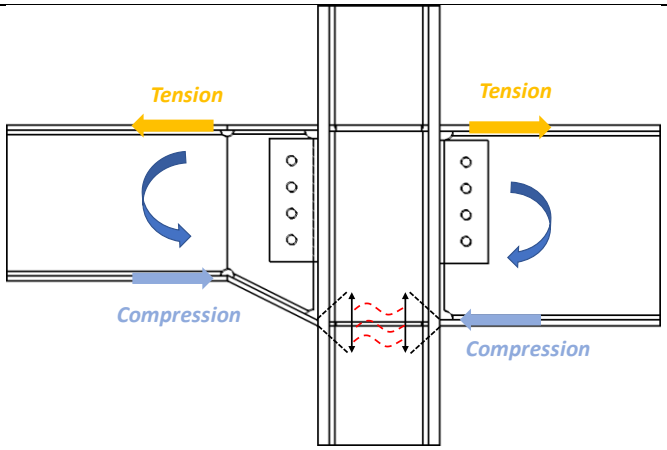 $d_{wc} = h_c - 2(t_{fc} + r_c)$ $= 276.3 - 2 \times (25.3 + 12.7)$ $= 200.3mm$ $k_{wc} = 0.7$ (Conservative assumption) For beam 1: $\bar{\lambda}_p = 0.932\sqrt{\frac{b_{eff,c,wc} d_{wc} f_{yc}}{E t_{wc}^2}}$ $= 0.932\sqrt{\frac{225 \times 200.3 \times 355}{200000 \times 15.3^2}}$ $= 0.545 < 0.72$ $\therefore \rho = 1$ $F_{c,wc,Rd} = \frac{\omega k_{wc} b_{eff,c,wc} t_{wc} f_{yc}}{\gamma_{M0}}$ $= \frac{1 \times 0.7 \times 225 \times 15.3 \times 355}{1.0} \times 10^{-3}$ $= 855.46kN > F_{Ed1} = 654.63kN$ If compression resistance is insufficient, stiffener is needed.	OK!

Check 5 – Compression zone check		
Ref	Calculations	Remark
	Column web in shear: $\varepsilon = \sqrt{\frac{235}{f_{yc}}}$ $= \sqrt{\frac{235}{355}}$ $= 0.8136$ $\frac{d_c}{t_{wc}} = \frac{200.3}{15.3} = 13.09 < 69\varepsilon = 56.14$ $\therefore V_{wp,Rd} = \frac{0.9 f_{yc} A_{vc}}{\sqrt{3}\gamma_{M0}}$ $A_v = A_c - 2b_c t_{fc} + (t_{wc} + 2r_c)t_{fc}$ $= 16800 - 2 \times 261.3 \times 25.3 + (15.3 + 2 \times 12.7) \times 25.3$ $= 4607.93mm^2$ $V_{wp,Rd} = \frac{0.9 \times 355 \times 4607.93}{\sqrt{3}} \times 10^{-3}$ $= 850.00kN > \mathrm{F_{Ed1}} = 654.63kN$	OK!

Check 6 – Tension stiffeners check (if tension resistance is inadequate)		
Ref	Calculations	Remark
SCI_P398	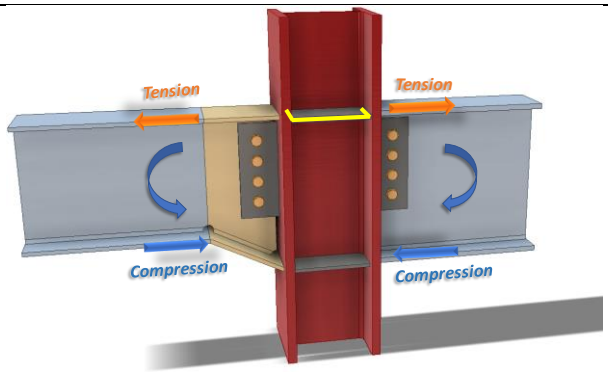 Minimum width of stiffener: $b_{sg,min} = \frac{0.75(b_c - t_{wc})}{2}$ $= \frac{0.75 \times (261.3 - 15.3)}{2}$ $= 92.25mm$ Use S355 stiffener with width and thickness: $b_{sg} = 110mm,$ $t_s = 15mm,$ $f_{ys} = 355MPa$ $b_{sn} = b_{sg} - corner\ chamfer$ $= 110 - 15$ $= 95mm$ $A_{sn} = 2b_{sn}t_s$ $= 2 \times 95 \times 15$ $= 2850mm^2$ $F_{t,s,Rd} = \frac{A_{sn}f_{ys}}{\gamma_{M0}}$ $= \frac{2850 \times 355}{1.0} \times 10^{-3}$ $= 1011.75kN > F_{Ed1} = 654.63kN$	OK!

Check 7 – Compression stiffeners check (if resistance is inadequate)		
Ref	Calculations	Remark
SCI_P398	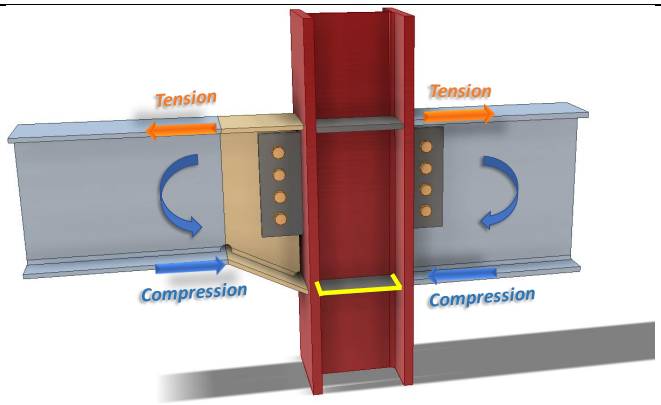 Let $b_{sg} = 95mm$ $t_s = 10mm$ $h_s = 225.7mm$ $\frac{c}{ts} = \frac{b_{sg}}{t_s} = \frac{95}{10} = 9.5 < 14\varepsilon = 11.39$ Effective area of stiffeners: $A_{s,eff} = 2A_s + t_{wc}(30\varepsilon t_{wc} + t_s)$ $= 2 \times 95 \times 10 + 15.3 \times (30 \times 0.82 \times 15.3 + 10)$ $= 7766.79mm^2$ The second moment of area of the stiffener: $I_s = \frac{(2b_{sg} + t_{wc})^3 t_s}{12}$ $= \frac{(2 \times 95 + 15.3)^3 \times 10}{12}$ $= 7210836mm^4$ The radius of gyration of the stiffener: $i_s = \sqrt{\frac{I_s}{A_{s,eff}}}$ $= \sqrt{\frac{7210836}{7766.79}}$ $= 30.47mm$	

Check 7 – Compression stiffeners check (if resistance is inadequate)		
Ref	Calculations	Remark
	$\lambda_1 = \pi\sqrt{\frac{E}{f_y}}$ $= 3.14 \times \sqrt{\frac{200000}{355}}$ $= 74.53$ $\bar{\lambda} = \frac{l}{i_s \lambda_1}$ $= \frac{225.7}{30.47 \times 74.53}$ $= 0.03 < 0.2$ ∴ The buckling effect may be ignored **Resistance of cross-section** $N_{c,Rd} = \frac{A_{s,eff} f_{ys}}{\gamma_{M0}}$ $= \frac{7766.79 \times 355}{1.0} \times 10^{-3}$ $= 2757.21kN > F_{Ed1} = 654.63kN$	OK!

Check 8 – Haunch resistance		
Ref	Calculations	Remark
SCI_P358 SS EN1993	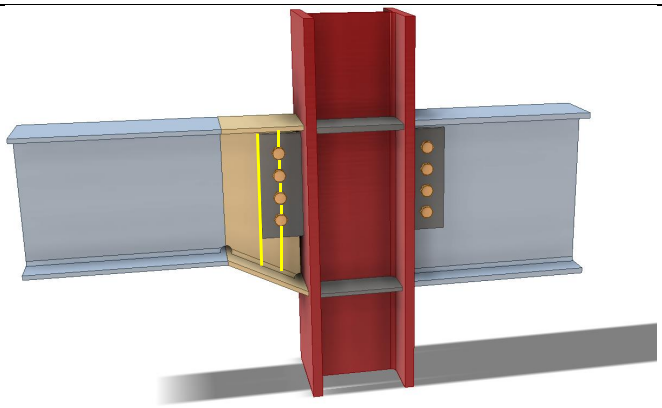 **Haunch shear resistance:** The thicknesses of flange and web are same as beam UB457×152×67. Haunch gross section resistance: $V_{Rd,g} = \frac{h_h t_w f_{y,w}}{\sqrt{3}\gamma_{M0}}$ $= \frac{405 \times 9.0 \times 355}{\sqrt{3}} \times 10^{-3}$ $= 747.08kN$ Haunch net section resistance: Net shear area: $A_{v,net} = h_h t_w - nd_0 t_w$ $= 405 \times 9.0 - 4 \times 22 \times 9$ $= 2853mm^2$ $V_{Rd,n} = \frac{A_{v,net} f_{u,w}}{\sqrt{3}\gamma_{M2}}$ $= \frac{2853 \times 490}{\sqrt{3} \times 1.25} \times 10^{-3}$ $= 645.69kN$	$h_h = 405mm$ (Depth of haunch at bolt line) $\gamma_{M0} = 1.0$ (SS EN1993-1-1)

Check 8 – Haunch resistance		
Ref	Calculations	Remark
SCI_P358	**Shear resistance of haunch web:** $V_{Rd} = \min(V_{Rd,g}, V_{Rd,n})$ $= \min(747.08, 645.69)$ $= 645.69kN > V_{Ed} = 200kN$ For **short fin plate**, **shear and bending moment interaction check** is not necessary for haunch web. 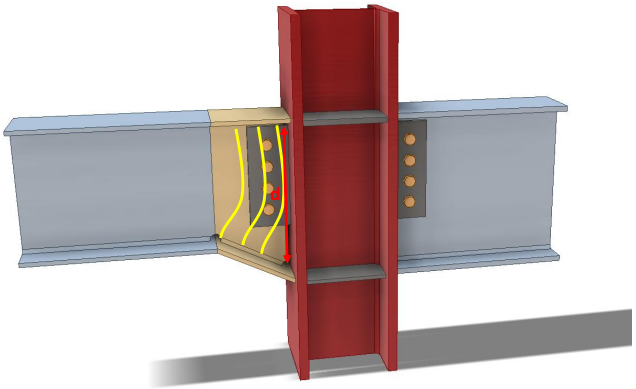	OK!
SS EN1993-1-5	**Shear buckling resistance of haunch web:** To check the shear buckling resistance of the haunch web, the largest height of the haunch was taken as the depth for calculation. The haunch was checked using similar method of checking rectangular girder. $\frac{72\varepsilon}{\eta} = \frac{72(0.8136)}{1.0} = 58.58$ $\frac{d}{t_w} = \frac{435}{9.0} = 48.33 < \frac{72\varepsilon}{\eta}$ ∴ The haunch web is **NOT** susceptible to **shear buckling**, shear buckling check is not necessary	Depth of web: $d = 435mm$ $\varepsilon = \sqrt{235/f_{yw}}$ $= \sqrt{235/355}$ $= 0.8136$

Check 9 – Weld resistance		
Ref	Calculations	Remark
	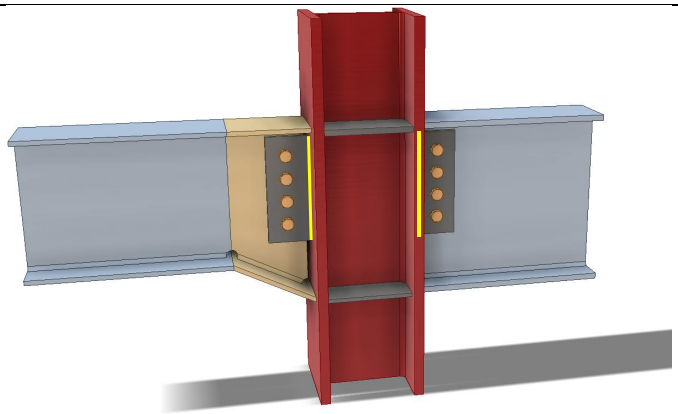	
SS EN1993	**Fin plate welding resistance:** Unit throat area: $A_u = 2h_p$ $= 2 \times 280$ =560mm Applied stress on weld: $\tau_{Ed} = \frac{V_{Ed}}{A_u}$ $= \frac{200}{560}$ $= 0.36kN/mm$ Choose fillet weld with 10mm leg length, 7.0mm throat thickness and grade S355: Longitudinal resistance: $F_{w,L,Rd} = 1.69kN/mm > 0.36kN/mm$	$h_p = 280.0mm$ $\gamma_{M0} = 1.0$ (SS EN1993-1-1) OK!

Check 9 – Weld resistance		
Ref	Calculations	Remark
	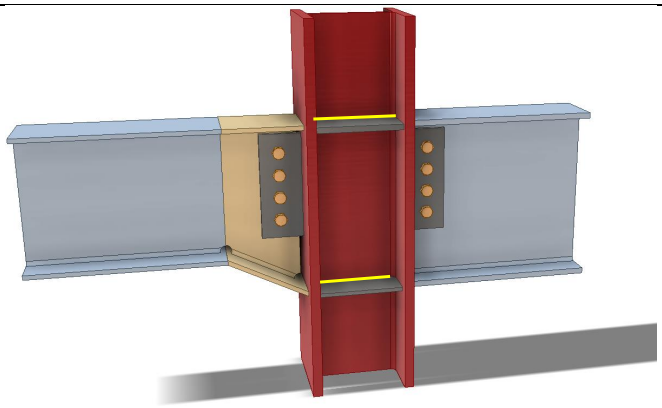 **Stiffeners welding resistance:** Minimum throat thickness requirement for flange weld of stiffeners: $a_{min} = \frac{t_s}{2} = \frac{15}{2} = 7.5mm$ Choose fillet weld with 12mm leg length, 8.4mm throat thickness and grade S275, the fillet weld between stiffener and column flange is assume achieve full strength of the stiffener Web weld: Effective length of web weld: $l = 2(h_s - 2 \times cope\ hole\ size - 2 \times s)$ $= 2 \times (225.7 - 2 \times 15 - 2 \times 10)$ $= 351.4mm$ Applied stress on weld: $\tau_{Ed} = \frac{F_{Ed}}{2l} = \frac{844.25}{2 \times 351.4} = 1.20kN/mm$ Choose fillet weld with 10mm leg length, 7.0mm throat thickness and grade S355, Longitudinal resistance: $F_{w,L,Rd} = 1.69kN/mm > 1.20kN/mm$ Full penetration butt weld is adopted to connect the beam flange to the column, hence, only the capacities of the beam flanges need to be checked:	OK!

Check 9 – Weld resistance		
Ref	Calculations	Remark
	Beam 1: $F_{Rd,flange} = \frac{t_{f,b1} b_{f,1} f_{y,bf1}}{\gamma_{M0}}$ $= \frac{15 \times 153.8 \times 355}{1.0} \times 10^{-3}$ $= 818.99kN > F_{Ed1} = 654.63kN$	OK!
	Beam 2: $F_{Rd,flange} = \frac{t_{f,b1} b_{f,1} f_{y,bf1}}{\gamma_{M0}}$ $= \frac{11.5 \times 171.5 \times 355}{1.0} \times 10^{-3}$ $= 700.15kN > F_{Ed} = 582.24kN$	OK!

2.4.9 Example 15 – Beam-to-Column connection bending about the minor axis of the column with different beam depths

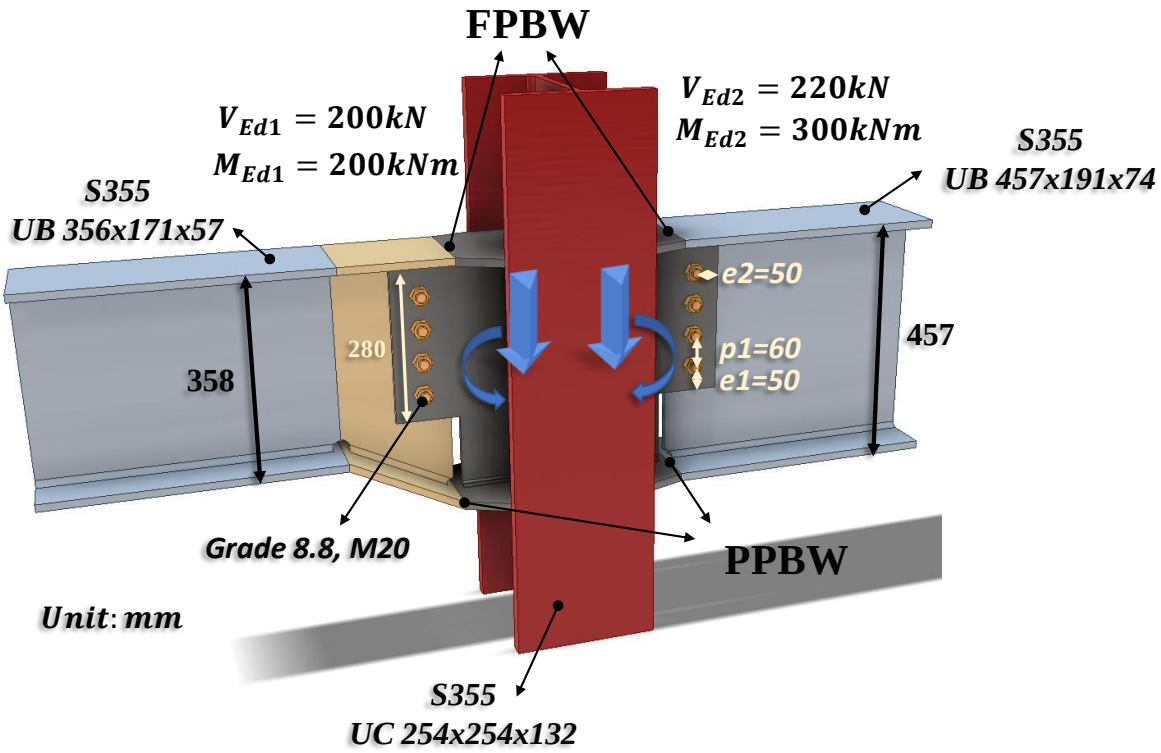

Check 1 – Bolt group resistance		
Ref	Calculations	Remark
SS EN1993-1-8	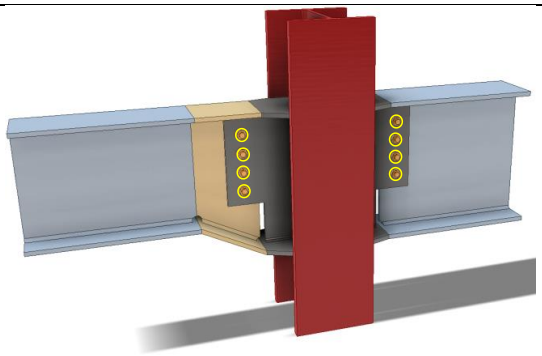 Assumption: The welds are designed to resist moment and the bolts are designed to resist shear force. **Bolt resistance:** Using Gr8.8, M20 bolts with: $A_s = 245mm^2; f_{ub} = 800MPa;$ **Shear resistance of a single bolt:** $F_{v,Rd} = \frac{\alpha_v f_{ub} A_s}{\gamma_{M2}}$ $= \frac{0.6 \times 800 \times 245}{1.25} \times 10^{-3}$ $= 94.08kN$ For single vertical line of bolts ($n_2 = 1$): $n_1 = 4, n = 4 \times 1 = 4$ $\alpha = 0$ $\beta = \frac{6z}{n_1(n_1+1)p_1}$ $= \frac{6 \times 65mm}{4 \times (4+1) \times 60mm}$ $= 0.325$	For class 8.8: $\alpha_v = 0.6$ $\gamma_{M2} = 1.25$ (refer to NA to SS) $z = 65.00mm$

Check 1 – Bolt group resistance		
Ref	Calculations	Remark
	$V_{Rd} = \frac{nF_{V,Rd}}{\sqrt{(1+\alpha n)^2 + (\beta n)^2}}$ $= \frac{4 \times 94.08}{\sqrt{(1+0)^2 + (0.325 \times 4)^2}} \times 10^{-3}$ $= 229.45kN > \max(V_{Ed1}; V_{Ed2}) = 220kN$	OK!
	Bearing resistance on fin plate: For bearing resistance in vertical direction of one bolt: $\alpha_b = \min\left(\frac{e_1}{3d_0}; \frac{p_1}{3d_0} - \frac{1}{4}; \frac{f_{ub}}{f_u}; 1.0\right)$ $= \min\left(\frac{50}{3 \times 22}; \frac{60}{3 \times 22} - \frac{1}{4}; \frac{800}{490}; 1.0\right)$ $= 0.66$ $k_1 = \min\left(\frac{2.8e_2}{d_0} - 1.7; \frac{1.4p_2}{d_0} - 1.7; 2.5\right)$ $= \min\left(\frac{2.8 \times 50}{22} - 1.7; 2.5\right)$ $= 2.5$ $F_{b,ver,Rd} = \frac{k_1 \alpha_b f_{u,p} d t_p}{\gamma_{M2}}$ $= \frac{2.5 \times 0.6591 \times 490 \times 20 \times 12}{1.25}$ $= 155.02kN$ For bearing resistance in horizontal direction of one bolt: $k_1 = \min\left(\frac{2.8e_1}{d_o} - 1.7; \frac{1.4p_1}{d_0} - 1.7; 2.5\right)$ $= \min\left(\frac{2.8 \times 50}{22} - 1.7; \frac{1.4 \times 60}{22} - 1.7; 2.5\right)$ $= 2.12$	$\boldsymbol{e_1 = 50.0mm}$ $(1.2d_0 < e_1 < 4t + 40mm)$ $\boldsymbol{p_1 = 60.0mm}$ $(2.2d_0 < p_1 < 14t\ or\ 200mm)$ $\boldsymbol{e_2 = 50.0mm}$ $(1.2d_0 < e_2 < 4t + 40mm)$ $\boldsymbol{p_2 = nil}$ $(2.4d_0 < p_2 < 14t\ or\ 200mm)$ $t_p = 12.0mm$ $t_{tab} < 16mm$ $f_{u,p} = 490MPa$ $f_{y,p} = 355MPa$

Check 1 – Bolt group resistance		
Ref	Calculations	Remark
	$\alpha_b = \min\left(\frac{e_2}{3d_0}; \frac{p_2}{3d_0} - \frac{1}{4}; \frac{f_{ub}}{f_{u,p}}; 1.0\right)$ $= \min\left(\frac{50}{3 \times 22}; \frac{800}{490}; 1.0\right)$ $= 0.76$ $F_{b,hor,Rd} = \frac{k_1 \alpha_b f_{u,p} d t_p}{\gamma_{M2}}$ $= \frac{2.12 \times 0.76 \times 490 \times 20 \times 12}{1.25} \times 10^{-3}$ $= 150.97\text{kN}$ **Bolt group bearing resistance:** $V_{Rd} = \frac{n}{\sqrt{\left(\frac{1+\alpha n}{F_{b,ver,Rd}}\right)^2 + \left(\frac{\beta n}{F_{b,hor,Rd}}\right)^2}}$ $= \frac{4}{\sqrt{\left(\frac{1}{155.02}\right)^2 + \left(\frac{0.325 \times 4}{150.97}\right)^2}} \times 10^{-3}$ $= 371.77kN > \max(V_{Ed1}; V_{Ed2}) = 220kN$	OK!
	Bearing resistance on beam web (UB457x191x74): Vertical bearing resistance: $\alpha_b = \min\left(\frac{e_{1,b}}{3d_0}; \frac{p_{1,b}}{3d_0} - \frac{1}{4}; \frac{f_{ub}}{f_{u,b}}; 1.0\right)$ $= \min\left(\frac{78}{3 \times 22}; \frac{60}{3 \times 22} - \frac{1}{4}; \frac{800}{490}; 1.0\right)$ $= 0.66$ $k_1 = \min\left(\frac{2.8 e_{2,b}}{d_0} - 1.7; 2.5\right)$ $= \min\left(\frac{2.8 \times 50}{22} - 1.7; 2.5\right)$ $= 2.5$	$\boldsymbol{e_{1,b} = 78.0mm}$ $\boldsymbol{p_{1,b} = 60.0mm}$ $\boldsymbol{e_{2,b} = 50.0mm}$ $\boldsymbol{p_{2,b} = nil}$ $t_{w,b1} = 9.0mm$ $t_{w,b1} < 16mm$ $f_{u,b} = 490MPa$ $f_{y,b} = 355MPa$

Check 1 – Bolt group resistance		
Ref	Calculations	Remark
	$F_{b,ver,Rd} = \frac{k_1 \alpha_b f_{u,b} d t_{w,b1}}{\gamma_{M2}}$ $= \frac{2.5 \times 0.6591 \times 490 \times 20 \times 9.0}{1.25} \times 10^{-3}$ $= 116.26kN$ Horizontal bearing resistance: $k_1 = \min\left(\frac{2.8e_{1,b}}{d_o} - 1.7; \frac{1.4p_1}{d_0} - 1.7; 2.5\right)$ $= \min\left(\frac{2.8 \times 78}{22} - 1.7; \frac{1.4 \times 60}{22} - 1.7; 2.5\right)$ $= 2.12$ $\alpha_b = \min\left(\frac{e_{2,b}}{3d_0}; \frac{p_2}{3d_0} - \frac{1}{4}; \frac{f_{ub}}{f_{u,b1}}; 1.0\right)$ $= \min\left(\frac{50}{3 \times 22}; \frac{800}{490}; 1.0\right)$ $= 0.76$ $F_{b,hor,Rd} = \frac{k_1 \alpha_b f_{u,b1} d t_{w,b1}}{\gamma_{M2}}$ $= \frac{2.12 \times 0.76 \times 490 \times 20 \times 9.0}{1.25} \times 10^{-3}$ $= 113.23kN$ **Bolt group bearing resistance:** $V_{Rd} = \frac{n}{\sqrt{\left(\frac{1+\alpha n}{F_{b,ver,Rd}}\right)^2 + \left(\frac{\beta n}{F_{b,hor,Rd}}\right)^2}}$ $= \frac{4}{\sqrt{\left(\frac{1}{116.26}\right)^2 + \left(\frac{0.325 \times 4}{113.23}\right)^2}} \times 10^{-3}$ $= 278.83kN > V_{Ed2} = 220kN$	OK!

Check 1 – Bolt group resistance		
Ref	Calculations	Remark
	Bearing resistance on haunch web: Vertical bearing resistance: $\alpha_b = \min\left(\frac{e_{1,b}}{3d_0}; \frac{p_{1,b}}{3d_0} - \frac{1}{4}; \frac{f_{ub}}{f_{u,b}}; 1.0\right)$ $= \min\left(\frac{78}{3 \times 22}; \frac{60}{3 \times 22} - \frac{1}{4}; \frac{800}{490}; 1.0\right)$ $= 0.66$ $k_1 = \min\left(\frac{2.8e_{2,b}}{d_0} - 1.7; 2.5\right)$ $= \min\left(\frac{2.8 \times 50}{22} - 1.7; 2.5\right)$ $= 2.5$ $F_{b,ver,Rd} = \frac{k_1 \alpha_b f_{u,b} d t_{w,b1}}{\gamma_{M2}}$ $= \frac{2.5 \times 0.6591 \times 490 \times 20 \times 8.1}{1.25} \times 10^{-3}$ $= 104.64kN$ Horizontal bearing resistance: $k_1 = \min\left(\frac{2.8e_{1,b}}{d_o} - 1.7; \frac{1.4p_1}{d_0} - 1.7; 2.5\right)$ $= \min\left(\frac{2.8 \times 78}{22} - 1.7; \frac{1.4 \times 60}{22} - 1.7; 2.5\right)$ $= 2.12$ $\alpha_b = \min\left(\frac{e_{2,b}}{3d_0}; \frac{p_2}{3d_0} - \frac{1}{4}; \frac{f_{ub}}{f_{u,b1}}; 1.0\right)$ $= \min\left(\frac{50}{3 \times 22}; \frac{800}{490}; 1.0\right)$ $= 0.76$	$\boldsymbol{e_{1,b} = 78.0mm}$ $\boldsymbol{p_{1,b} = 60.0mm}$ $\boldsymbol{e_{2,b} = 50.0mm}$ $\boldsymbol{p_{2,b} = nil}$ $t_{w,b1} = 8.1mm$ $t_{w,b1} < 16mm$ $f_{u,b} = 490MPa$ $f_{y,b} = 355MPa$

Check 1 – Bolt group resistance		
Ref	Calculations	Remark
	$F_{b,hor,Rd} = \frac{k_1 \alpha_b f_{u,b1} d t_{w,b1}}{\gamma_{M2}}$ $= \frac{2.12 \times 0.76 \times 490 \times 20 \times 8.1}{1.25} \times 10^{-3}$ $= 101.90kN$ **Bolt group bearing resistance:** $V_{Rd} = \frac{n}{\sqrt{\left(\frac{1+\alpha n}{F_{b,ver,Rd}}\right)^2 + \left(\frac{\beta n}{F_{b,hor,Rd}}\right)^2}}$ $= \frac{4}{\sqrt{\left(\frac{1}{104.64}\right)^2 + \left(\frac{0.325 \times 4}{101.90}\right)^2}} \times 10^{-3}$ $= 250.94kN > V_{Ed1} = 200kN$	OK!

Check 2 – Fin plate resistance		
Ref	Calculations	Remark
SS EN1993 SCI_P358	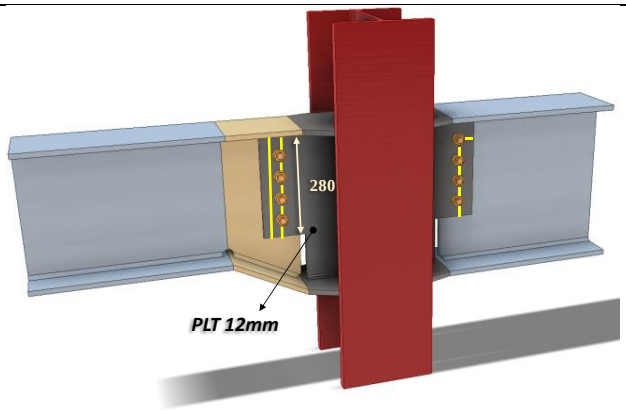 **Fin plate shear gross section resistance:** $V_{Rd,g} = \frac{h_p t_p}{1.27} \frac{f_{y,p}}{\sqrt{3}\gamma_{M0}}$ $= \frac{280 \times 12}{1.27} \times \frac{355}{\sqrt{3}} \times 10^{-3}$ $= 542.25kN$ **Fin plate shear net section resistance:** Net area: $A_{net} = (h_p - nd_0)t_p$ $= (280 - 4 \times 22) \times 12$ $= 2304mm^2$ $V_{Rd,n} = \frac{A_{net} f_{u,p}}{\sqrt{3}\gamma_{M2}}$ $= \frac{2304 \times 490}{\sqrt{3} \times 1.25} \times 10^{-3}$ $= 521.44kN$ **Fin plate shear block shear resistance:** Net area subject to tension: $A_{nt} = (e_2 - 0.5d_0)t_p$ $= (50 - 0.5 \times 22) \times 12$ $= 468mm^2$	$h_p = 280.0mm$ $\gamma_{M0} = 1.0$ (SS EN1993-1-1)

Check 2 – Fin plate resistance		
Ref	Calculations	Remark
	Net area subject to shear: $A_{nv} = (e_1 + (n-1)P_1 - (n-0.5)d_0)t_p$ $= (50 + 3 \times 60 - 3.5 \times 22) \times 12$ $= 1968mm^2$ $V_{Rd,b} = \frac{0.5 f_{u,p} A_{nt}}{\gamma_{M2}} + \frac{f_{y,p} A_{nv}}{\sqrt{3}\gamma_{M0}}$ $= \left(\frac{0.5 \times 490 \times 468}{1.25} + \frac{355 \times 1968}{\sqrt{3}}\right) \times 10^{-3}$ $= 495.09kN$ **Shear resistance of fin plate:** $V_{Rd} = \min(V_{Rd,g}, V_{Rd,n}, V_{Rd,b})$ $= \min(542.25, 521.44, 495.09)$ $= 495.09kN > \max(V_{Ed1}; V_{Ed2}) = 220kN$	OK!

Check 3a – Beam web (UB457×191×74)		
Ref	Calculations	Remark
SS EN1993 SCI_P358	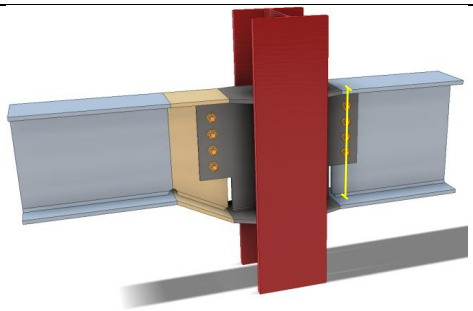 **Beam web gross section resistance:** For UB457x191x74: Cross-section area, $A_g = 9460mm^2$ Flange width, $b_f = 190.4mm$ Flange thickness, $t_f = 14.5mm$ Root radius, $r = 10.2mm$ Shear area: $A_v = A_g - 2t_f b_f + (t_w + 2r)t_f$ $= 9460 - 2 \times 14.5 \times 190.4 + (9.0 + 2 \times 10.2) \times 14.5$ $= 4364.7mm^2$ $V_{Rd,g} = \frac{A_v f_{y,b1}}{\sqrt{3}\gamma_{M0}}$ $= \frac{4364.7 \times 355}{\sqrt{3}} \times 10^{-3}$ $= 894.59kN$ **Beam web net section resistance:** Area of net section: $A_{net} = A_v - nd_0 t_{w,b}$ $= 4364.7 - 4 \times 22 \times 9.0$ $= 3572.7mm^2$ $V_{Rd,n} = \frac{A_{v,net} f_{u,b}}{\sqrt{3}\gamma_{M2}}$ $= \frac{3572.2 \times 490}{\sqrt{3} \times 1.25} \times 10^{-3}$ $= 808.58kN$	

Check 3a – Beam web (UB457×191×74)		
Ref	Calculations	Remark
	Shear resistance of haunch web: $V_{Rd} = \min(V_{Rd,g}, V_{Rd,n})$ $= \min(894.59, 808.58)$ $= 808.58kN > V_{Ed2} = 220kN$	OK!

Check 3b – Beam web resistance (UB356×171×57)		
Ref	Calculations	Remark
SS EN1993 SCI_P358	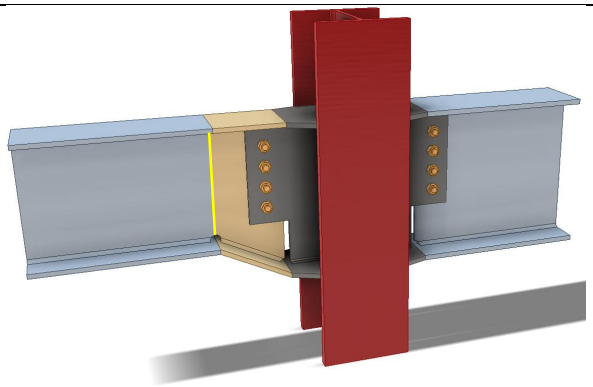 **Beam web gross section resistance:** Shear area: $A_v = A_g - 2t_f b_f - 2t_w r_w$ $= 7260 - 2 \times 13 \times 172.2 - 2 \times 8.1 \times 15$ $= 2539.8mm^2$ $V_{Rd} = \frac{A_v f_{y,b}}{\sqrt{3}\gamma_{M0}}$ $= \frac{2539.8 \times 355}{\sqrt{3}} \times 10^{-3}$ $= 520.56kN > V_{Ed1} = 200kN$	For UB356x171x57: Cross-section area, $A_g = 7260mm^2$ Flange width, $b_f = 172.2mm$ Flange thickness, $t_f = 13mm$ Root radius, $r = 10.2mm$ Weld access hole size, $r_w = 15mm$ OK!

Check 4 – Haunch resistance		
Ref	Calculations	Remark
SCI_P358 SS EN1993	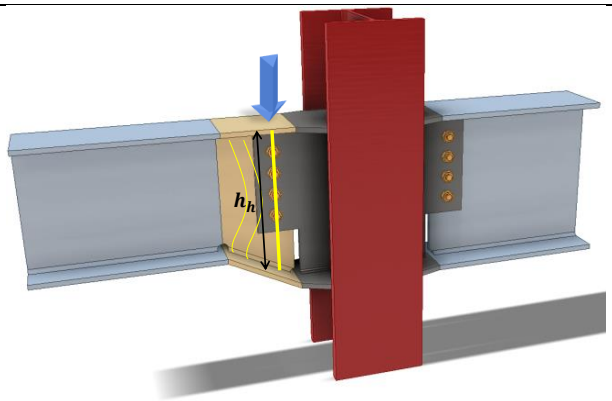 **Haunch shear resistance:** In order to reduce stress concentration, the thicknesses of flange and web are same as secondary beam UB356×171×51. Gross section: $V_{Rd,g} = \frac{h_h t_w f_{y,w}}{\sqrt{3}\gamma_{M0}}$ $= \frac{406 \times 8.1 \times 355}{\sqrt{3}} \times 10^{-3}$ $= 674.03kN$ Net section: Net shear area: $A_{v,net} = h_h t_w - nd_0 t_w$ $= 406 \times 8.1 - 4 \times 22 \times 8.1$ $= 2575.8mm^2$ $V_{Rd,n} = \frac{A_{v,net} f_{u,w}}{\sqrt{3}\gamma_{M2}}$ $= \frac{2575.8 \times 490}{\sqrt{3} \times 1.25} \times 10^{-3}$ $= 582.96kN$	$h_h = 406mm$ (Depth of haunch at bolt line) $\gamma_{M0} = 1.0$ (SS EN1993-1-1)

Check 4 – Haunch resistance		
Ref	Calculations	Remark
	Shear resistance of haunch web: $V_{Rd} = \min(V_{Rd,g}, V_{Rd,n})$ $= \min(674.03, 582.96)$ $= 582.96kN > V_{Ed1} = 200kN$	OK!
SCI_P358	For **short fin plate**, **shear and bending moment interaction check** is not necessary for haunch web. 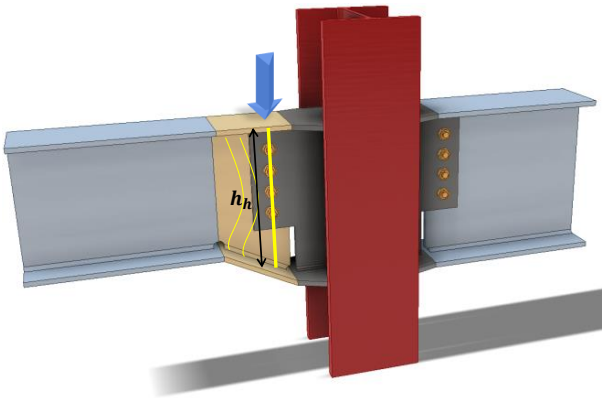 	
SS EN1993-1-5	**Shear buckling resistance of haunch web:** To check the shear buckling resistance of the haunch web, the largest height of the haunch was taken as the depth for calculation. The haunch was checked using similar method of checking rectangular girder. $\frac{72\varepsilon}{\eta} = \frac{72(0.8136)}{1.0} = 58.58$ $\frac{d}{t_w} = \frac{428}{8.1} = 52.84 < \frac{72\varepsilon}{\eta}$ ∴ The haunch web is **NOT** susceptible to shear buckling. Shear buckling check is not necessary.	Depth of web: $d = 428mm$ $\varepsilon = \sqrt{235/f_{yw}}$ $= \sqrt{235/355}$ $= 0.8136$

Check 5a – Weld resistance of beam flange (UB457x191x74)		
Ref	Calculations	Remark
	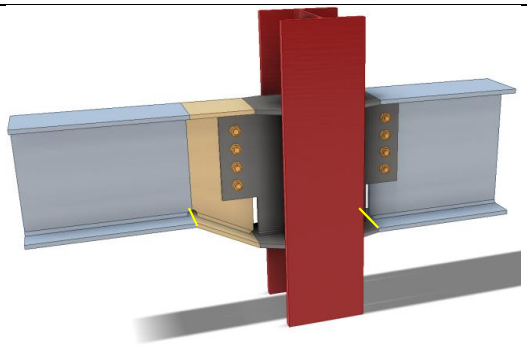	
SS EN1993	Assume that the design moment is resisted by the flanges of the secondary beam and same beam section is used to connect to the column. The beam flange tensile resistance is: $F_{Rd,flange} = \frac{t_f b_f f_{y,bf}}{\gamma_{M0}}$ $= \frac{14.5 \times 190.4 \times 355}{1.0} \times 10^{-3}$ $= 980.08kN$ Moment arm: $r = h_b - t_{f,b}$ $= 457 - 14.5$ $= 442.5mm$ Tensile force on flange: $F_{Ed2} = \frac{M_{Ed2}}{r}$ $= \frac{300}{442.5} \times 10^3$ $= 677.97kN < F_{Rd,flange} = 980.08kN$	
BS 5950-1 6.9.2	**Partial penetration butt weld resistance:** The minimum throat size of a longitudinal partial penetration butt weld should be $2\sqrt{t}$ (in mm), where t is the thickness of the thinner part of joint.	
SS EN1993-1-1 4.7.2 (1)	The design resistance of a partial penetration butt weld should be determined using the method for a deep penetration fillet weld.	

Check 5a – Weld resistance of beam flange (UB457x191x74)		
Ref	Calculations	Remark
	In this example, the angle between the transverse force and weld throat $\theta = 90°$. Provided the groove angle is greater than 60° or U-butt is adopted, the throat thickness is equal to the depth of penetration. 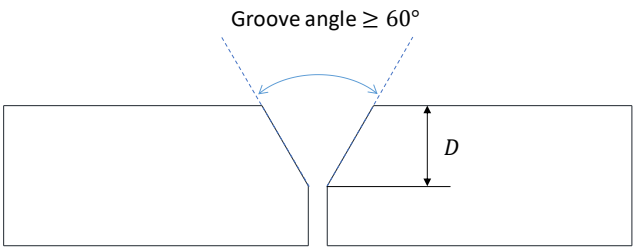 Choose partial butt weld with 12mm ($> 2\sqrt{14.5} = 7.62mm$) throat thickness and grade S355 which match the beam material properties: Transverse resistance: $F_{w,T,Rd} = \frac{0.9f_u}{\gamma_{M2}} a$ $= 0.9 \times 470 \times \frac{12}{1.25} \times 10^{-3}$ $= 4.06kN/mm$ Tensile resistance of the PPBW: $F_{Rd} = F_{w,T,Rd} b_f$ $= 4.06 \times 190.4$ $= 773.18kN > F_{Ed2} = 677.97kN$	OK!

Check 5b – Weld resistance of beam flange (UB 356x171x57)		
Ref	Calculations	Remark
SS EN1993	$F_{Rd,flange} = \frac{t_f b_f f_{y,bf}}{\gamma_{M0}}$ $= \frac{13 \times 172.2 \times 355}{1.0} \times 10^{-3}$ $= 794.70kN$ Moment arm: $r = h_b - t_{f,b}$ $= 358 - 13$ $= 345mm$ Tensile force on flange: $F_{Ed1} = \frac{M_{Ed1}}{r}$ $= \frac{200}{345} \times 10^3$ $= 579.71kN < F_{Rd,flange} = 794.70kN$ Choose partial butt weld with 12mm ($> 2\sqrt{13} = 7.21mm$) throat thickness and grade S355 which match the beam material properties: Transverse resistance: $F_{w,T,Rd} = 4.06kN/mm$ Tensile resistance of the PPBW: $F_{Rd} = F_{w,T,Rd} b_f$ $= 4.06 \times 172.2$ $= 641.88kN > F_{Ed1} = 579.71kN$	OK!

Check 6 – Weld group of stiffener plate		
Ref	Calculations	Remark
SS EN1993	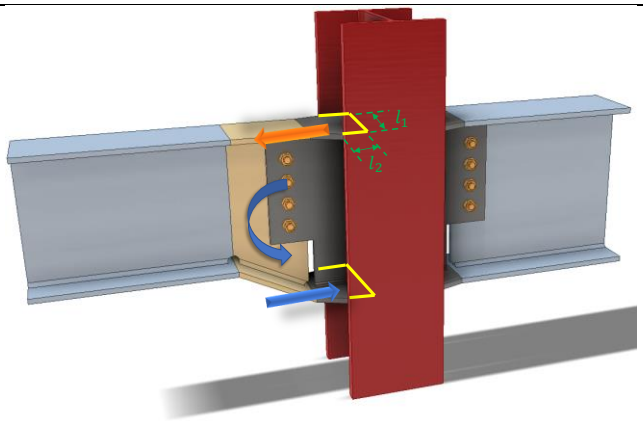 Choose fillet weld with 10mm leg length, 7mm throat thickness and grade S355 which match the beam steel grade: Longitudinal resistance: $F_{w,L,Rd} = 1.69kN/mm$ Transverse resistance: $F_{w,T,Rd} = 2.07kN/mm$ Length of fillet weld parallel to load direction: $l_1 = 108mm$ Length of fillet weld perpendicular to load direction: $l_2 = 195.7mm$ Welding resistance for stiffen plate: $F_{Rd} = 2l_1F_{w,L,Rd} + l_2F_{w,T,Rd}$ $= 2 \times 108 \times 1.69 + 195.7 \times 2.07$ $= 770.14kN > \max(F_{Ed1}; F_{Ed2}) = 677.97kN$	OK!

Note:

Since the design forces from the beams acting on two sides of the column are different, there is an unbalanced moment induced on the column. Hence, the column design needs to be designed for the unbalanced moment.

2.4.10 Example 16 – Beam-to-Beam connection (moment-resisting connection) in minor axis (Section a)

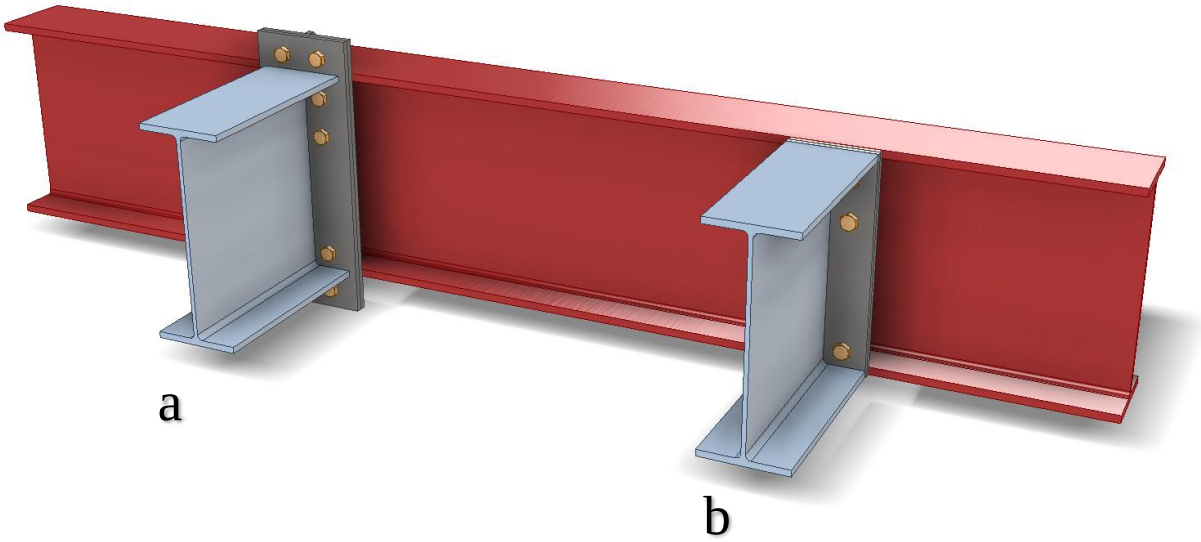

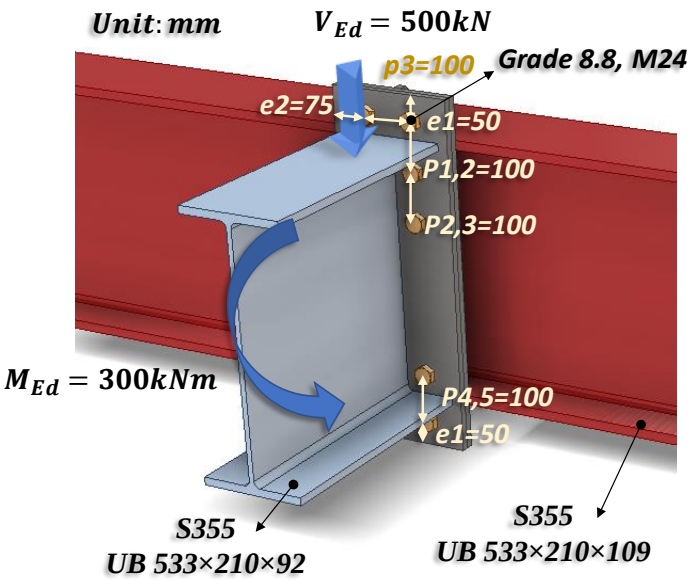

Check 1 – Weld of beam web to end plate		
Ref	Calculations	Remark
	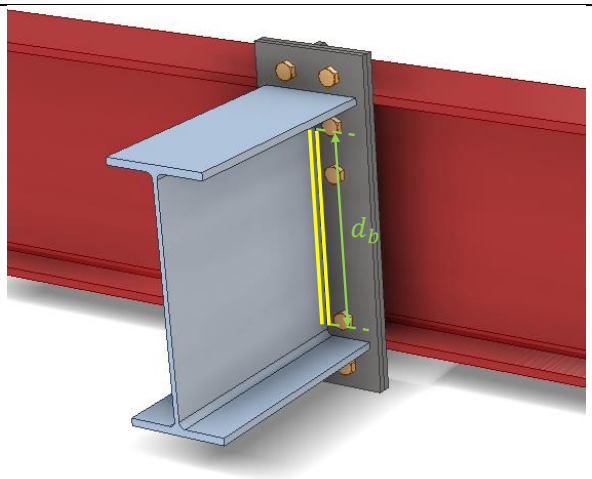	
SS EN1993-1-8 6.2.2 (1)	In weld connections, and in bolted connections with end-plates, the welds connecting the beam web should be designed to transfer the shear force from the connected beam to the joint, without any assistance from the welds connecting the beam flanges.	
SS EN1993	Length of fillet weld connecting beam web: $L_w = 2d_b$ $= 2 \times 476.5$ $= 953mm$	For UB533x210x92: Depth between fillets: $d_b = 476.5mm$
SCI_P363	Choose fillet weld with 8mm leg length, 5.6mm throat thickness and grade S355: Longitudinal resistance: $F_{w,L,Rd} = 1.35kN/mm$ Transverse resistance: $F_{w,T,Rd} = 1.65kN/mm$ Shear resistance: $V_{Rd} = F_{w,L,Rd}L_w$ $= 1.35 \times 953$ $= 1286.55kN > V_{Ed} = 500kN$	OK

Check 1b – Weld of beam flange to end plate		
Ref	Calculations	Remark
SS EN1993-1-8 SCI_P363	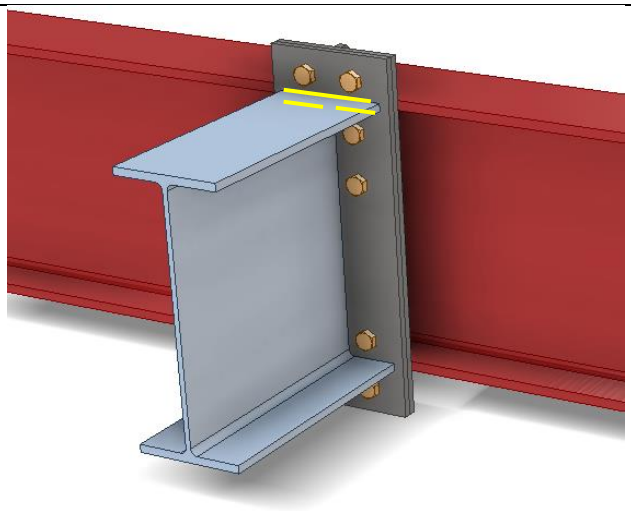 Choose fillet weld with 10mm leg length, 7mm throat thickness and grade S355: Transverse resistance: $F_{w,T,Rd} = 2.07kN/mm$ Length of fillet weld: $L = 2b - t_{wb} - 2r - 4t_f$ $= 2 \times 209.3 - 10.1 - 2 \times 12.7 - 4 \times 15.6$ $= 320.7mm$ Applied tensile force due to moment: $F_{Ed} = \frac{M_{Ed}}{h - t_f}$ $= \frac{300}{533.1 - 15.6} \times 10^3$ $= 579.71kN$ Tensile resistance of the fillet weld connecting beam flange and end plate: $F_{Rd} = LF_{w,T,Rd}$ $= 320.7 \times 2.07$ $= 663.85kN > F_{Ed} = 579.71kN$	For UB533×210×92: Width of section: $b = 209.3mm$ Web thickness: $t_{wb} = 10.1mm$ Root radius: $r = 12.7mm$ Flange thickness: $t_f = 15.6mm$ Depth of section: $h = 533.1mm$ OK

Note:

Welding cannot be done behind the plate within the flange of the primary beam.

Check 2a – Moment resistance (Tension zone T-stubs)		
Ref	Calculations	Remark
	Bolt spacings: End distance: $e_x = 50mm$ Edge distance: $e = 75mm$ Spacing (gauge): $w = 100mm$ Spacing (top row above beam flange): $x = 40mm$ Spacing row 1 – 2: $p_{1-2} = 100mm$ Spacing row 2 – 3:$p_{2-3} = 100mm$ 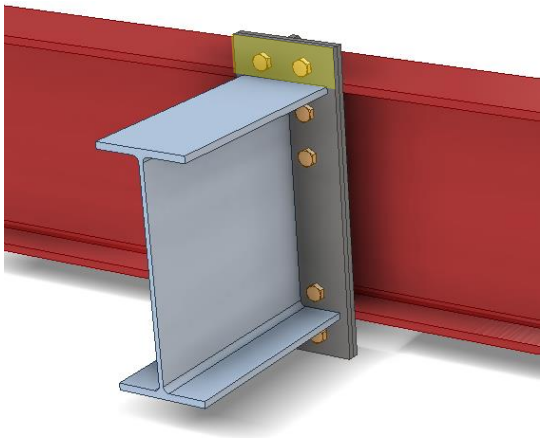 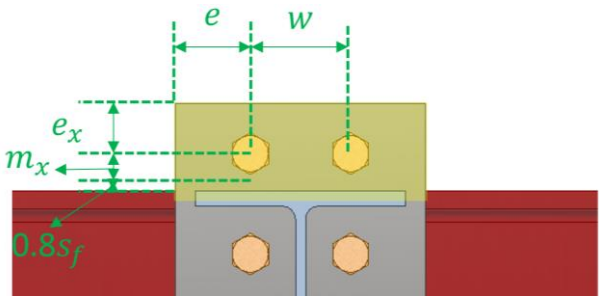 	
SCI_P398 SS EN1993-1-8	**Bolt row 1:** **End Plate in Beading** For pair of bolts in an unstiffened end plate extension: The **circular patterns** effective length for: Circular yielding: $l_{eff,cp} = 2\pi m_x = 2 \times \pi \times 30.4 = 191.01mm$ Individual end yielding: $l_{eff,cp} = \pi m_x + 2e_x = \pi \times 30.4 + 2 \times 50$ $= 195.50mm$	Assume 12mm fillet weld to connect beam flange to the end plate: $m_x = x - 0.8s_f$ $= 40 - 0.8 \times 12$ $= 30.4mm$

Check 2a – Moment resistance (Tension zone T-stubs)		
Ref	Calculations	Remark
	Circular group yielding: $l_{eff,cp} = \pi m_x + w = \pi \times 30.4 + 100$ $= 195.50mm$ ∴ The circular pattern effective length: $l_{eff,cp} = \min(191.01; 195.50; 195.50)$ $= 191.01mm$ The **Non-circular patterns** effective length for: Double curvature: $l_{eff,nc} = \frac{b_p}{2} = \frac{250}{2} = 125mm$ Individual end yielding: $l_{eff,nc} = 4m_x + 1.25e_x$ $= 4 \times 30.4 + 1.25 \times 50 = 184.1mm$ Corner yielding: $l_{eff,nc} = 2m_x + 0.625e_x + e$ $= 2 \times 30.4 + 0.625 \times 50 + 75$ $= 167.05mm$ Group end yielding: $l_{eff,nc} = 2m_x + 0.625e_x + \frac{w}{2}$ $= 2 \times 30.4 + 0.625 \times 50 + \frac{100}{2}$ $= 142.05mm$ ∴ The non-circular pattern effective length: $l_{eff,nc} = \min(125.0; 184.10; 167.05; 142.05)$ $= 125.00mm$ Effective length for mode 1: $l_{eff,1} = \min\ (l_{eff,cp}; l_{eff,nc}) = 125.00mm$	

Check 2a – Moment resistance (Tension zone T-stubs)		
Ref	Calculations	Remark
	Effective length for mode 2: $l_{eff,2} = l_{eff,nc} = 125.00mm$ 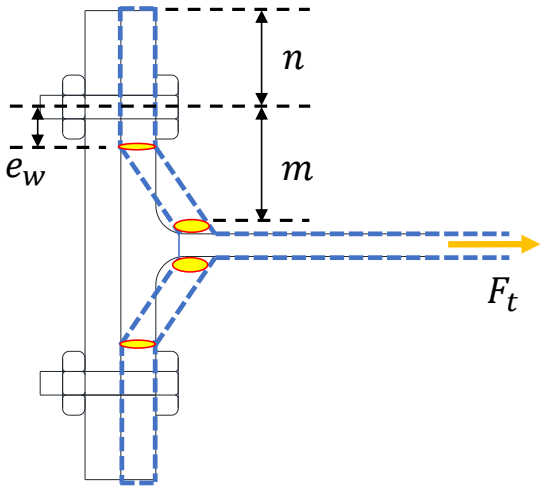 	
SCI_P398 SS EN1993-1-8	Mode 1 Complete flange yielding resistance: $M_{pl,1,Rd} = \frac{0.25 \sum l_{eff,1}\, t_p^2 f_y}{\gamma_{M0}}$ $= \frac{0.25 \times 125.00 \times 15^2 \times 355}{1.0}$ $= 2496094Nmm$ $m = m_x = 30.4mm$ $n = \min\,(1.25m; e)$ $= \min(38; 75)$ $= 38.0mm$ Method 1: $F_{T,1,Rd} = \frac{4M_{pl,1,Rd}}{m}$ $= \frac{4 \times 2496094}{30.4} \times 10^{-3}$ $= 328.43kN$	$t_p = 15mm$ As $t_p < 16mm$, $f_y = 355MPa$ Grade 8.8 M24 bolts are used: Diameter of washer: $d_w = 44mm$ $e_w = \frac{d_w}{4} = 11mm$

Check 2a – Moment resistance (Tension zone T-stubs)		
Ref	Calculations	Remark
	Method 2: $F_{T,1,Rd} = \frac{(8n - 2e_w)M_{pl,1,Rd}}{2mn - e_w(m+n)}$ $= \frac{(8 \times 38 - 2 \times 11) \times 2496094}{2 \times 30.4 \times 38 - 11 \times (30.4 + 38)} \times 10^{-3}$ $= 451.80kN$ 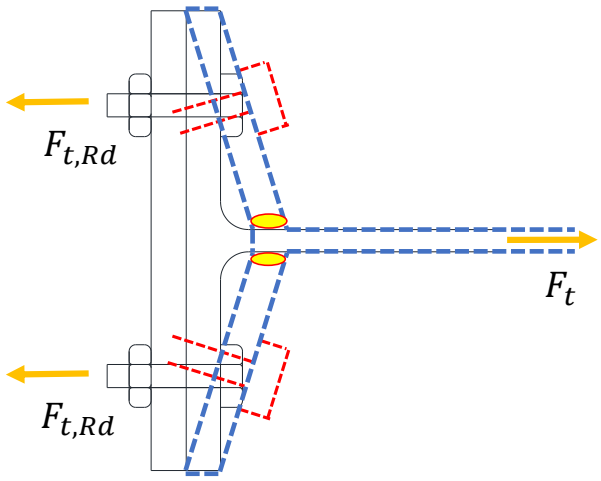 Mode 2 Bolt failure with flange yielding resistance: $M_{pl,2,Rd} = \frac{0.25 \sum l_{eff,2}\, t_p^2 f_y}{\gamma_{M0}}$ $= \frac{0.25 \times 125.0 \times 15^2 \times 355}{1.0}$ $= 2496094Nmm$ $F_{t,Rd} = \frac{k_2 f_{ub} A_s}{\gamma_{M2}}$ $= \frac{0.9 \times 800 \times 353}{1.25}$ $= 203328N$ $\sum F_{t,Rd} = 2 \times F_{t,Rd} = 2 \times 203328$ $= 406656N$	For Grade 8.8 M24 bolts: $k_2 = 0.9$ Ultimate strength: $f_{ub} = 800MPa$ Shear area: $A_s = 353mm^2$

Check 2a – Moment resistance (Tension zone T-stubs)		
Ref	Calculations	Remark
	$F_{T,2,Rd} = \frac{2M_{pl,2,Rd} + n\sum F_{t,Rd}}{m+n}$ $= \frac{2 \times 2496094 + 38 \times 406656}{30.4 + 38} \times 10^{-3}$ $= 298.91kN$ 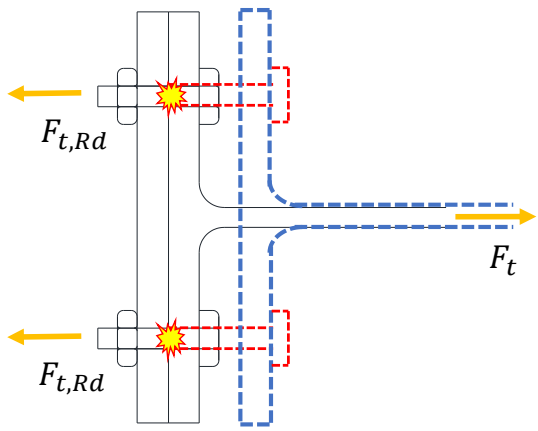 Mode 3 Bolt failure resistance: $F_{T,3,Rd} = \sum F_{t,Rd} = 2F_{t,Rd}$ $= 2 \times 203328 \times 10^{-3}$ $= 406.66kN$ Resistance of end plate in bending: $F_{t,ep,Rd} = \min\{F_{T,1,Rd}; F_{T,2,Rd}; F_{T,3,Rd}\}$ $= \min(328.43; 298.91; 406.66\}$ $= 298.91kN$ **Beam web in tension** As bolt row 1 is in the extension of the end plate, the resistance of the beam web in tension is not applicable to this bolt row.	

Check 2a – Moment resistance (Tension zone T-stubs)		
Ref	Calculations	Remark
	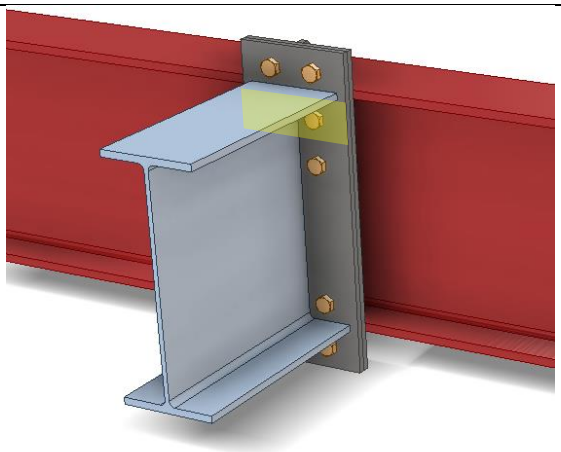 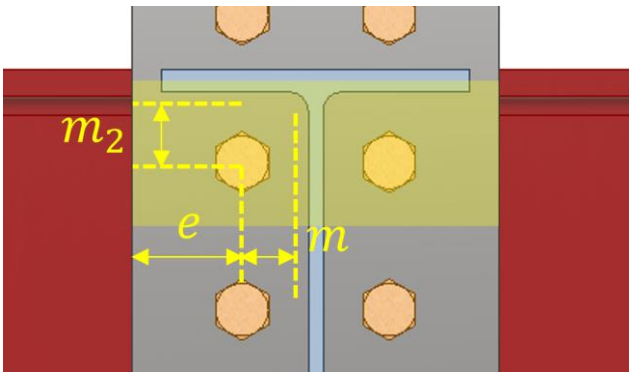	
SS EN1993-1-8	**Bolt row 2:** **End plate in bending** $m = m_p = 38.55mm$ $e = 75mm$ $m_2 = p_{1-2} - x - t_{fb} - 0.8s_f$ $= 100 - 40 - 15.6 - 0.8 \times 12$ $= 34.8mm$ Based on Figure 6.11 of SS EN1993-1-8: Values of α for stiffened column flanges and end-plates, $\alpha = 7.5$ For pair of bolts in a column flange below a stiffener (or cap plate) or in an end plate below the beam flange:	$m_p = (w - t_{wb} - 2 \times 0.8s_w)/2$ $= (100 - 10.1 - 2 \times 0.8 \times 8)/2$ $= 38.55mm$ $\lambda_1 = \frac{m}{m + e}$ $= \frac{38.55}{38.55 + 75}$ $= 0.34$ $\lambda_2 = \frac{m_2}{m + e}$ $= \frac{34.8}{38.55 + 75}$ $= 0.31$

Check 2a – Moment resistance (Tension zone T-stubs)		
Ref	Calculations	Remark
SCI_P398 SS EN1993-1-8	The **circular patterns** effective length for: Circular yielding: $l_{eff,cp} = 2\pi m = 2\pi \times 38.55 = 242.22mm$ The **non-circular patterns** effective length for: Side yielding near beam flange or a stiffener: $l_{eff,nc} = \alpha m = 7.5 \times 38.55 = 289.13mm$ Effective length for mode 1: $l_{eff,1} = \min(l_{eff,cp}; l_{eff,nc}) = 242.22mm$ Effective length for mode 2: $l_{eff,2} = l_{eff,nc} = 289.13mm$ Mode 1 Complete flange yielding resistance: $M_{pl,1,Rd} = \frac{0.25 \sum l_{eff,1}\, t_p^2 f_y}{\gamma_{M0}}$ $= \frac{0.25 \times 242.22 \times 15^2 \times 355}{1.0}$ $= 4836767Nmm$ $n = \min\,(1.25m; e)$ $= \min(48.19; 75)$ $= 48.19mm$ Method 1: $F_{T,1,Rd} = \frac{4M_{pl,1,Rd}}{m}$ $= \frac{4 \times 4836767}{38.55} \times 10^{-3}$ $= 501.87kN$	

Check 2a – Moment resistance (Tension zone T-stubs)		
Ref	Calculations	Remark
	Method 2: $F_{T,1,Rd} = \frac{(8n - 2e_w)M_{pl,1,Rd}}{2mn - e_w(m+n)}$ $= \frac{(8 \times 48.19 - 2 \times 11) \times 4836767}{2 \times 38.55 \times 48.19 - 11 \times (38.55 + 48.19)} \times 10^{-3}$ $= 636.75kN$ Mode 2 Bolt failure with flange yielding resistance: $M_{pl,2,Rd} = \frac{0.25 \sum l_{eff,2}\, t_p^2 f_y}{\gamma_{M0}}$ $= \frac{0.25 \times 289.13 \times 15^2 \times 355}{1.0}$ $= 5773465Nmm$ $F_{T,2,Rd} = \frac{2M_{pl,2,Rd} + n \sum F_{t,Rd}}{m+n}$ $= \frac{2 \times 5773465 + 48.19 \times 406656}{38.55 + 48.19} \times 10^{-3}$ $= 359.05kN$ Mode 3 Bolt failure resistance: $F_{T,3,Rd} = \sum F_{t,Rd} = 2F_{t,Rd}$ $= 2 \times 203328 \times 10^{-3}$ $= 406.66kN$ Resistance of end plate in bending: $F_{t,ep,Rd} = \min\{F_{T,1,Rd}; F_{T,2,Rd}; F_{T,3,Rd}\}$ $= \min(501.87; 359.05; 406.66\}$ $= 359.05kN$	

Check 2a – Moment resistance (Tension zone T-stubs)		
Ref	Calculations	Remark
SS EN1993-1-8 6.2.6.8 (1)	**Beam web in tension** $F_{t,wb,Rd} = \frac{b_{eff,t,wc} t_{wb} f_{y,b}}{\gamma_{M0}}$ $= \frac{242.22 \times 10.1 \times 355}{1.0} \times 10^{-3}$ $= 868.47kN$ 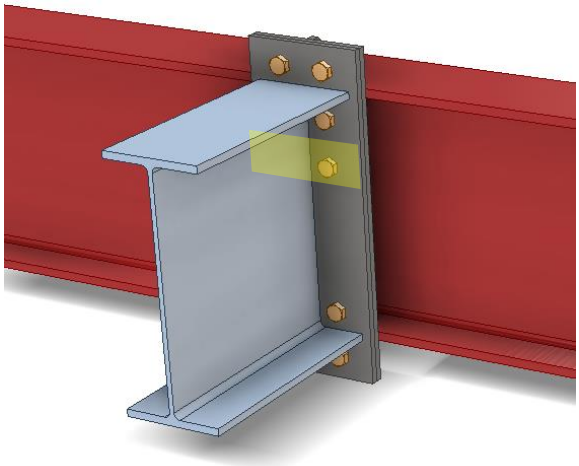 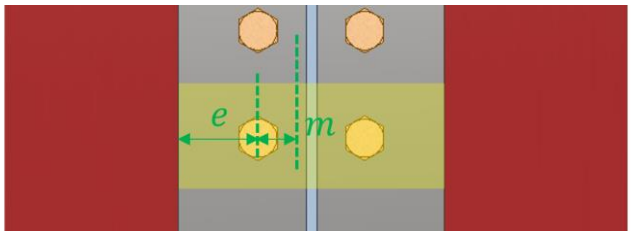 **Bolt row 3:** **End plate in bending** For pair of bolts in a column flange away from any stiffener or in an end plate, away from the flange or any stiffener: The circular patterns effective length for: Circular yielding: $l_{eff,cp} = 2\pi m = 2\pi \times 38.55 = 242.22mm$	$b_{eff,c,wc} = l_{eff}$ $= 242.22mm$ *Conservatively, consider the smallest l_{eff} (6.2.6.8 (2)) For UB 533x210x92: $t_{wb} = 10.1mm$

Check 2a – Moment resistance (Tension zone T-stubs)		
Ref	Calculations	Remark
SCI_P398 SS EN1993-1-8	The non-circular patterns effective length for: Side yielding: $l_{eff,nc} = 4m + 1.25e = 4 \times 38.55 + 1.25 \times 75$ $= 247.95mm$ Effective length for mode 1: $l_{eff,1} = \min(l_{eff,cp}; l_{eff,nc}) = 242.22mm$ Effective length for mode 2: $l_{eff,2} = l_{eff,nc} = 247.95mm$ Mode 1 Complete flange yielding resistance: $M_{pl,1,Rd} = \frac{0.25 \sum l_{eff,1}\, t_p^2 f_y}{\gamma_{M0}}$ $= \frac{0.25 \times 242.22 \times 15^2 \times 355}{1.0}$ $= 4836767Nmm$ $n = \min\,(1.25m; e)$ $= \min(48.19; 75)$ $= 48.19mm$ Method 1: $F_{T,1,Rd} = \frac{4M_{pl,1,Rd}}{m}$ $= \frac{4 \times 4836767}{38.55} \times 10^{-3}$ $= 501.87kN$ Method 2: $F_{T,1,Rd} = \frac{(8n - 2e_w)M_{pl,1,Rd}}{2mn - e_w(m+n)}$ $= \frac{(8 \times 48.19 - 2 \times 11) \times 4836767 \times 10^{-3}}{2 \times 38.55 \times 48.19 - 11 \times (38.55 + 48.19)}$ $= 636.75kN$	

Check 2a – Moment resistance (Tension zone T-stubs)		
Ref	Calculations	Remark
	Mode 2 Bolt failure with flange yielding resistance: $M_{pl,2,Rd} = \frac{0.25 \sum l_{eff,2}\, t_p^2 f_y}{\gamma_{M0}}$ $= \frac{0.25 \times 247.95 \times 15^2 \times 355}{1.0}$ $= 4951252 Nmm$ $F_{T,2,Rd} = \frac{2M_{pl,2,Rd} + n \sum F_{t,Rd}}{m + n}$ $= \frac{2 \times 4951252 + 48.19 \times 406656}{38.55 + 48.19} \times 10^{-3}$ $= 340.09 kN$ Mode 3 Bolt failure resistance: $F_{T,3,Rd} = \sum F_{t,Rd} = 2F_{t,Rd}$ $= 2 \times 203328 \times 10^{-3}$ $= 406.66 kN$ Resistance of end plate in bending: $F_{t,ep,Rd} = \min\{F_{T,1,Rd}; F_{T,2,Rd}; F_{T,3,Rd}\}$ $= \min(501.87; 340.09; 406.66\}$ $= 340.09 kN$	
SS EN1993-1-8 6.2.6.8 (1)	**Beam web in tension** $F_{t,wb,Rd} = \frac{b_{eff,t,wc} t_{wb} f_{y,b}}{\gamma_{M0}}$ $= \frac{242.22 \times 10.1 \times 355}{1.0} \times 10^{-3}$ $= 868.47 kN$	$b_{eff,c,wc} = l_{eff}$ $= 242.22 mm$

Check 2a – Moment resistance (Tension zone T-stubs)		
Ref	Calculations	Remark
	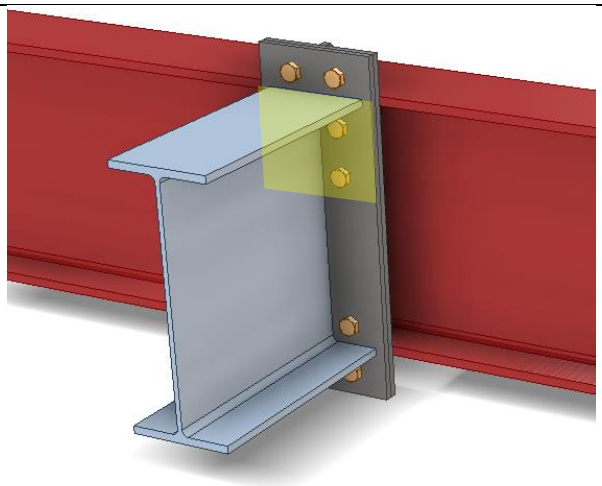 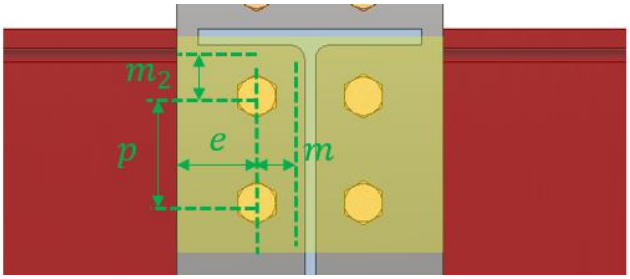 **Bolt row 2 & 3 combined:** **End plate in bending** As row 1 and row 2 is separated by beam flange, row 1 acts individually. However, for bolt row 3, the resistance of it may be limited by the resistance of rows 2 & 3 as a group.	
SS EN1993-1-8 6.2.6.5 Table 6.6	Row 2 is classified as "First bolt-row below tension flange of beam" with effective length: Circular patterns: $l_{eff,cp} = \pi m + p = \pi \times 38.55 + 100$ $= 221.11mm$ Non-circular patterns: $l_{eff,nc} = 0.5p + \alpha m - (2m + 0.625e)$ $= 0.5 \times 100 + 7.5 \times 38.55 - (2 \times 38.55 + 0.625 \times 75)$ $= 215.15mm$	

Check 2a – Moment resistance (Tension zone T-stubs)		
Ref	Calculations	Remark
	Row 3 is classified as "Other end bolt-row" with effective length: Circular patterns: $l_{eff,cp} = \pi m + p = \pi \times 38.55 + 100$ $= 221.11mm$ Non-circular patterns: $l_{eff,nc} = 2m + 0.625e + 0.5p$ $= 2 \times 38.55 + 0.625 \times 75 + 0.5 \times 100$ $= 173.98mm$ The total effective length for this bolt group combination: $\sum l_{eff,cp} = 221.11 + 221.11 = 442.22mm$ $\sum l_{eff,nc} = 215.15 + 173.98 = 389.13mm$ Effective length for mode 1: $\sum l_{eff,1} = \min\left(\sum l_{eff,cp}; \sum l_{eff,nc}\right)$ $= 389.13mm$ Effective length for mode 2: $\sum l_{eff,2} = \sum l_{eff,nc} = 389.13mm$ Mode 1 Complete flange yielding resistance: $M_{pl,1,Rd} = \frac{0.25 \sum l_{eff,1}\, t_p^2 f_y}{\gamma_{M0}}$ $= \frac{0.25 \times 389.13 \times 15^2 \times 355}{1.0}$ $= 7770340Nmm$ $n = \min\,(1.25m; e)$ $= \min(48.19; 75)$ $= 48.19mm$	

Check 2a – Moment resistance (Tension zone T-stubs)		
Ref	Calculations	Remark
	Method 1: $F_{T,1,Rd} = \frac{4M_{pl,1,Rd}}{m}$ $= \frac{4 \times 7770340}{38.55} \times 10^{-3}$ $= 806.26kN$ Method 2: $F_{T,1,Rd} = \frac{(8n - 2e_w)M_{pl,1,Rd}}{2mn - e_w(m+n)}$ $= \frac{(8 \times 48.19 - 2 \times 11) \times 7770340}{2 \times 38.55 \times 48.19 - 11 \times (38.55 + 48.19)} \times 10^{-3}$ $= 1022.95kN$ Mode 2 Bolt failure with flange yielding resistance: $M_{pl,2,Rd} = \frac{0.25 \sum l_{eff,2}\, t_p^2 f_y}{\gamma_{M0}}$ $= \frac{0.25 \times 389.13 \times 15^2 \times 355}{1.0}$ $= 7770340Nmm$ $F_{T,2,Rd} = \frac{2M_{pl,2,Rd} + n \sum F_{t,Rd}}{m+n}$ $= \frac{2 \times (7770340 + 48.19 \times 406656)}{38.55 + 48.19} \times 10^{-3}$ $= 631.01kN$ Mode 3 Bolt failure resistance: $F_{T,3,Rd} = \sum F_{t,Rd} = 4F_{t,Rd}$ $= 4 \times 203328 \times 10^{-3}$ $= 813.31kN$	

<table>
<tr><th colspan="3">Check 2a – Moment resistance (Tension zone T-stubs)</th></tr>
<tr><th>Ref</th><th>Calculations</th><th>Remark</th></tr>
<tr><td>SS EN1993-1-8
6.2.6.8 (1)</td><td>Resistance of end plate in bending:
$F_{t,ep,Rd} = \min\{F_{T,1,Rd}; F_{T,2,Rd}; F_{T,3,Rd}\}$

$= \min(806.26; 631.01; 813.31\}$

$= 631.01kN$

Beam web in tension

$F_{t,wb,Rd} = \frac{b_{eff,t,wc} t_{wb} f_{y,b}}{\gamma_{M0}}$

$= \frac{389.13 \times 10.1 \times 355}{1.0} \times 10^{-3}$

$= 1395.23kN$

The resistance of bolt row 3 is limited to:
$F_{t3,Rd} = F_{t2-3,Rd} - F_{t2,Rd} = 631.01 - 359.05$

$= 271.96kN$

Summary of tension resistance of T-stubs:

<table><tr><th>Row</th><th>Resistance</th><th>Effective Resistance</th></tr><tr><td>Row 1 alone</td><td>298.91kN</td><td>298.91kN</td></tr><tr><td>Row 2 alone</td><td>359.05kN</td><td>359.05kN</td></tr><tr><td>Row 3 alone</td><td>340.09kN</td><td>271.96kN</td></tr><tr><td>Row 2 and 3</td><td>631.01kN</td><td>-</td></tr></table></td><td>$b_{eff,c,wc} = \sum l_{eff}$

$= 389.13mm$</td></tr>
</table>

Check 2b – Moment resistance (Compression zone)		
Ref	Calculations	Remark
SS EN1993-1-8 6.2.6.7 (1)	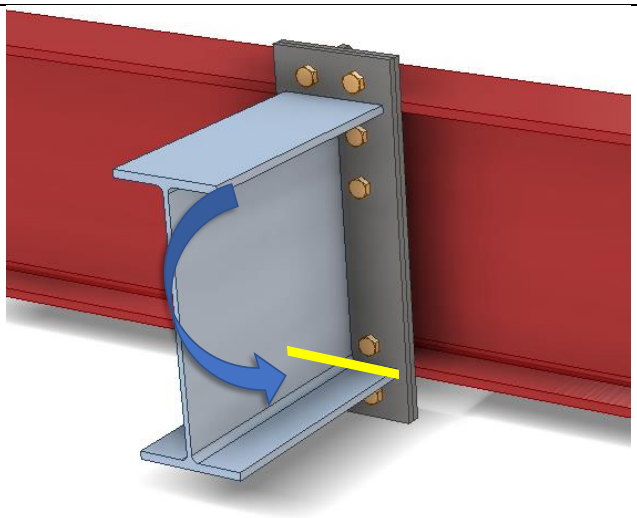 Design moment resistance of the beam cross-section (S355 UB533x210x92): $M_{c,Rd} = 838kNm$ $F_{c,fb,Rd} = \frac{M_{c,Rd}}{h - t_{fb}}$ $= \frac{838}{533.1 - 15.6} \times 10^3$ $= 1619.32kN$	$M_{c,Rd}$ is read from SCI_P363 page D-66 For UB533x210x92: $h_b = 533.1mm$ $t_{fb} = 15.6mm$

Check 2 – Moment resistance		
Ref	Calculations	Remark
SS EN1993-1-8 6.2.7.2 (9)	The effective resistances of bolt rows need to be reduced when the bolt row resistance is greater than $1.9F_{t,Rd}$ $1.9F_{t,Rd} = 1.9 \times 203.33 = 386.32kN$ As all bolt row resistances are lesser than 386.32kN, no reduction is required. **Equilibrium of forces** Total effective tension resistance: $\sum F_{t,Rd} = 298.91 + 359.05 + 271.96$ $= 929.91kN < F_{c,fb,Rd} = 1619.32kN$ Hence, no reduction is required for the tensile resistance. 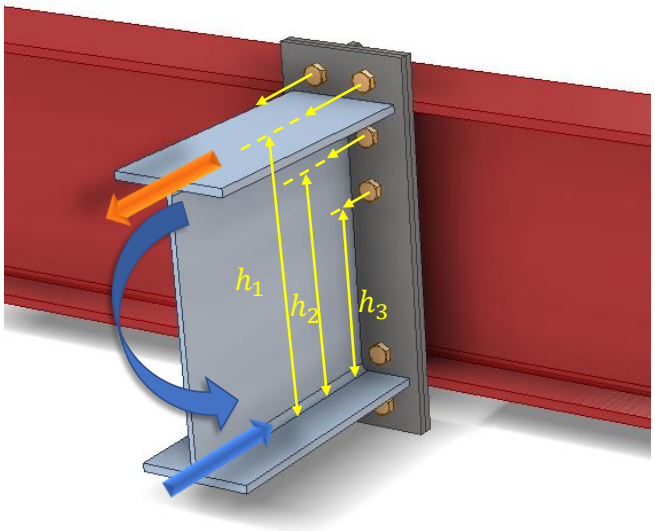 	
SS EN1993-1-8 6.2.7.2 (1)	The moment resistance of the connection may be determined using: $M_{j,Rd} = \sum_r h_r F_{t,r,Rd}$	

Check 2 – Moment resistance		
Ref	Calculations	Remark
	Taking the center of compression to be at the mid-thickness of the compression flange of the beam: $h_1 = h_b - (\frac{t_{fb}}{2}) + x$ $= 533.1 - \left(\frac{15.6}{2}\right) + 40$ $= 565.3mm$ $h_2 = h_1 - 100 = 465.3mm$ $h_3 = h_2 - 100 = 365.3mm$ $M_{j,Rd} = h_1 F_{1,r,Rd} + h_2 F_{2,r,Rd} + h_3 F_{3,r,Rd}$ $= 565.3 \times 298.91 + 465.3 \times 359.05 + 356.3 \times 271.96$ $= 435.38kNm > M_{Ed} = 300kNm$	OK

Check 3 – Shear resistance of bolt group		
Ref	Calculations	Remark
	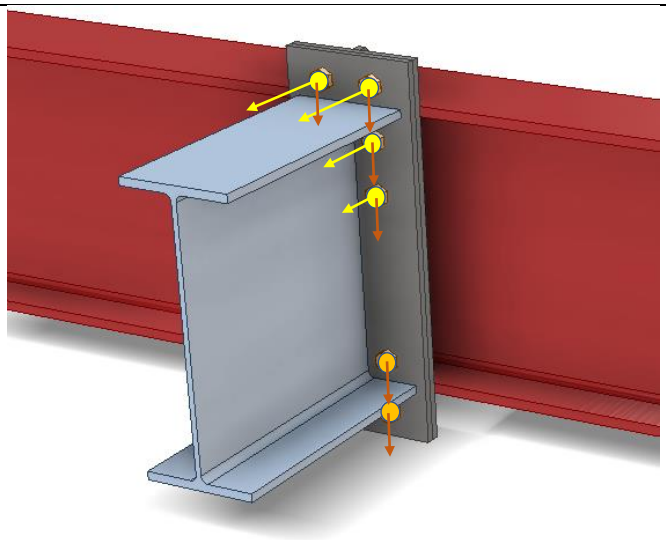	
SCI_P398	For Grade 8.8 M24 bolts: $\alpha_v = 0.6$ $A_s = 353mm^2$ $f_{ub} = 800MPa$ Shear resistance of an individual bolt: $F_{v,Rd} = \frac{\alpha_v f_{ub} A_s}{\gamma_{M2}}$ $= \frac{0.6 \times 800 \times 353}{1.25} \times 10^{-3}$ $= 135.55kN$ $k_1 = \min\left(\frac{2.8e_2}{d_0} - 1.7; 2.5\right)$ $= \min\left(2.8 \times \frac{75}{26} - 1.7; 2.5\right)$ $= 2.5$ $\alpha_b = \min\left(\frac{p_1}{3d_0} - \frac{1}{4}; \frac{e_1}{3d_0}; \frac{f_{ub}}{f_u}; 1.0\right)$ $= \min\left(\frac{100}{3 \times 26} - \frac{1}{4}; \frac{50}{3 \times 26}; \frac{800}{510}; 1.0\right)$ $= 0.64$	

Check 3 – Shear resistance of bolt group		
Ref	Calculations	Remark
	Bearing resistance of an individual bolt: $F_{b,Rd} = \frac{k_1 \alpha_b f_u d t}{\gamma_{M2}}$ $= \frac{2.5 \times 0.64 \times 510 \times 24 \times 15}{1.25}$ $= 235.38kN$ Hence, resistance of an individual bolt: $F_{Rd} = \min(F_{v,Rd}; F_{b,Rd})$ $= \min(135.55; 235.38)$ $= 135.55kN$ According to SCI_P398, the shear resistance of the upper rows may be taken conservatively as 28% of the shear resistance without tension, thus the shear resistance of the bolt group is: $V_{Rd} = (4 + 6 \times 0.28) \times F_{Rd}$ $= 5.68 \times 135.55$ $= 769.94kN > V_{Ed} = 500kN$	OK

Note:

In this example, the primary beam is an edge beam which supports secondary beam on one side only. Torsion on the primary beam should be checked during the beam design.

Additional info (whether stiffeners for protruding plate are required)		
Ref	Calculations	Remark
	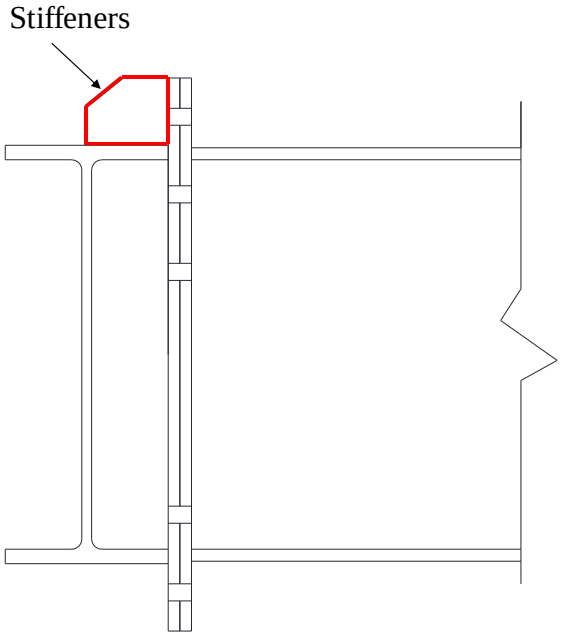	
SS EN1993-1-8 SCI_P398	If stiffener is used to strengthen the extension of the end plate, the end plate bending resistance will be increased. $m = m_p = 38.55mm$ **Bolt row 1:** **End Plate in Beading** For pair of bolts in an unstiffened end plate extension: The **circular patterns** effective length for: Circular yielding: $l_{eff,cp} = 2\pi m = 2 \times \pi \times 38.55 = 242.22mm$ Individual end yielding: $l_{eff,cp} = \pi m + 2e_x = \pi \times 38.55 + 2 \times 50$ $= 221.11mm$ ∴ The circular pattern effective length: $l_{eff,cp} = \min(242.22; 221.11)$ $= 221.11mm$	

Additional info (whether stiffeners for protruding plate are required)		
Ref	Calculations	Remark
	The **Non-circular patterns** effective length for: Side yielding: $l_{eff,nc} = 4m + 1.25e_x$ $= 4 \times 38.55 + 1.25 \times 50 = 247.95mm$ Corner yielding away from the stiffener/flange: $l_{eff,nc} = 2m + 0.625e_x + e$ $= 2 \times 38.55 + 0.625 \times 50 + 75$ $= 173.98mm$ Corner yielding: $l_{eff,nc} = \alpha m - (2m + 0.625e) + e_x$ $= 7.7 \times 38.55 - (2 \times 38.55 + 0.625 \times 75) + 50$ $= 222.86mm$ ∴ The non-circular pattern effective length: $l_{eff,nc} = \min(247.95; 173.98; 222.86)$ $= 173.98mm$ Effective length for mode 1: $l_{eff,1} = \min\,(l_{eff,cp}; l_{eff,nc}) = 173.98mm$ Effective length for mode 2: $l_{eff,2} = l_{eff,nc} = 173.98mm$ Mode 1 Complete flange yielding resistance: $M_{pl,1,Rd} = \frac{0.25 \sum l_{eff,1}\, t_p^2 f_y}{\gamma_{M0}}$ $= \frac{0.25 \times 173.98 \times 15^2 \times 355}{1.0}$ $= 3474063Nmm$ $m = m_p = 38.55mm$	$m_x = x - 0.8s_f$ $= 40 - 0.8 \times 12$ $= 30.4mm$ $\lambda_1 = 0.34$ $\lambda_2 = 0.27$ $\therefore \alpha = 7.7$

Additional info (whether stiffeners for protruding plate are required)		
Ref	Calculations	Remark
	$n = \min(1.25m; e)$ $= \min(48.19; 75)$ $= 48.19mm$ Method 1: $F_{T,1,Rd} = \frac{4M_{pl,1,Rd}}{m}$ $= \frac{4 \times 3474063}{38.55} \times 10^{-3}$ $= 360.47kN$ Method 2: $F_{T,1,Rd} = \frac{(8n - 2e_w)M_{pl,1,Rd}}{2mn - e_w(m+n)}$ $= \frac{(8 \times 48.19 - 2 \times 11) \times 3474063}{2 \times 38.6 \times 48.2 - 11 \times (38.6 + 48.2)} \times 10^{-3}$ $= 457.35kN$ Mode 2 Bolt failure with flange yielding resistance: $M_{pl,2,Rd} = \frac{0.25 \sum l_{eff,2}\, t_p^2 f_y}{\gamma_{M0}}$ $= \frac{0.25 \times 173.98 \times 15^2 \times 355}{1.0}$ $= 3474063Nmm$ $F_{t,Rd} = \frac{k_2 f_{ub} A_s}{\gamma_{M2}}$ $= \frac{0.9 \times 800 \times 353}{1.25}$ $= 203328N$ $\sum F_{t,Rd} = 2 \times F_{t,Rd} = 2 \times 203328$ $= 406656N$	

Additional info (whether stiffeners for protruding plate are required)		
Ref	Calculations	Remark
	$F_{T,2,Rd} = \frac{2M_{pl,2,Rd} + n\sum F_{t,Rd}}{m+n}$ $= \frac{2 \times 3474063 + 48.19 \times 406656}{38.55 + 48.19} \times 10^{-3}$ $= 306.03kN$ Mode 3 Bolt failure resistance: $F_{T,3,Rd} = \sum F_{t,Rd} = 2F_{t,Rd}$ $= 2 \times 203328 \times 10^{-3}$ $= 406.66kN$ Resistance of end plate in bending: $F_{t,ep,Rd} = \min\{F_{T,1,Rd}; F_{T,2,Rd}; F_{T,3,Rd}\}$ $= \min(360.47; 306.03; 406.66\}$ $= 306.03kN$ Moment resistance: $M_{j,Rd} = h_1F_{1,r,Rd} + h_2F_{2,r,Rd} + h_3F_{3,r,Rd}$ $= 565.3 \times 306.03 + 465.3 \times 359.05 + 356.3 \times 271.96$ $= 439.41kNm$	

Note: In this example, adding a stiffener behind the extended end plate will increase the moment capacity of the connection to a limited extend. Hence, stiffeners is not needed for the extended end plate. However, adding the stiffener may have a more significant effect in increasing load capacity for connections with larger extension.

2.4.11 Example 17 – Beam-to-Beam connection (moment-resisting connection) in minor axis (Section b)

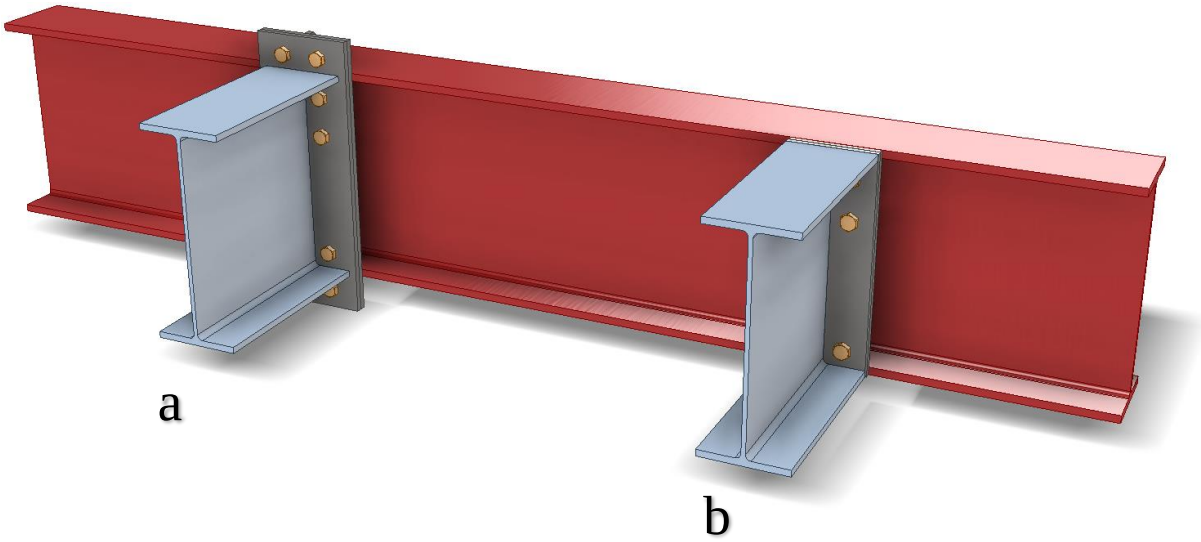

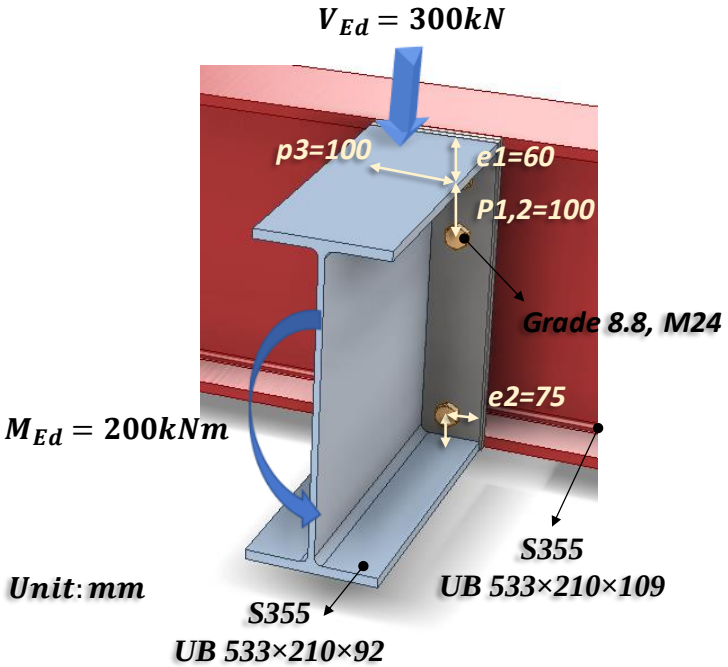

Check 1 – Weld of beam web to end plate		
Ref	Calculations	Remark
	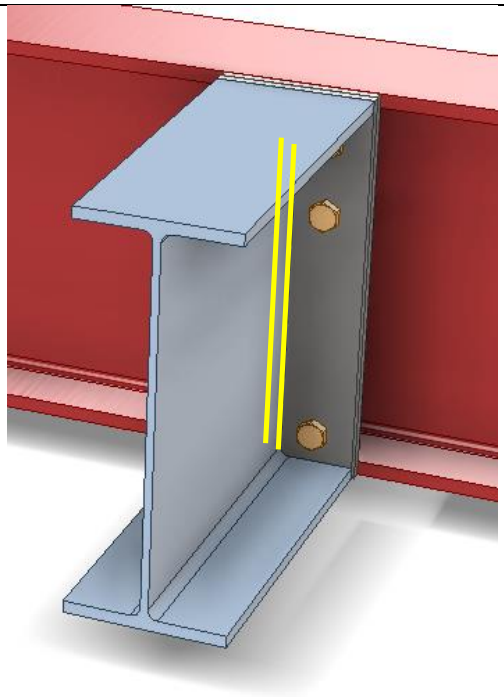	
SS EN1993-1-8 6.2.2 (1)	In welded connections and bolted connections with end-plates, the welds connecting the beam web should be designed to transfer the shear force from the connected beam to the joint, without any assistance from the welds connecting the beam flanges.	
SS EN1993	Length of fillet weld connecting beam web: $L_w = 2d_b$ $= 2 \times 476.5$ $= 953mm$	For UB533x210x92: Depth between fillets: $d_b = 476.5mm$
SCI_P363	Choose fillet weld with 8mm leg length, 5.6mm throat thickness and grade S355: Longitudinal resistance: $F_{w,L,Rd} = 1.35kN/mm$ Transverse resistance: $F_{w,T,Rd} = 1.65kN/mm$	

Check 1 – Weld of beam web to end plate		
Ref	Calculations	Remark
	Shear resistance: $V_{Rd} = F_{w,L,Rd} L_w$ $= 1.35 \times 953$ $= 1286.55kN > V_{Ed} = 300kN$	OK

Check 1a – Resistance of flange PPBW		
Ref	Calculations	Remark
	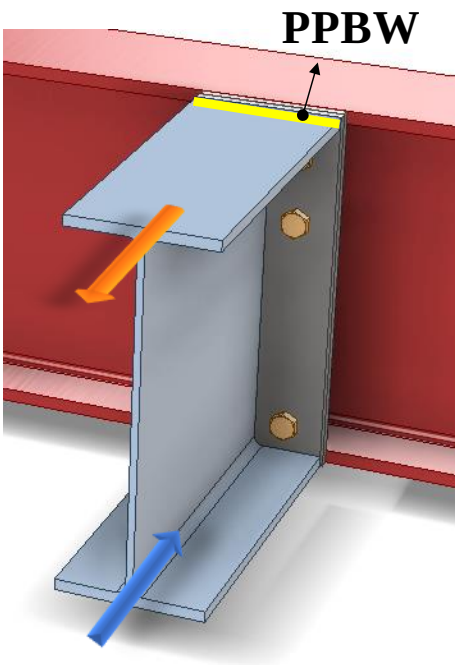	
BS 5950-1 6.9.2	**Partial penetration butt weld resistance:** The minimum throat size of a longitudinal partial penetration butt weld should be $2\sqrt{t}$ (in mm), where t is the thickness of the thinner part of joint.	
SS EN1993-1-1 4.7.2 (1)	The design resistance of a partial penetration butt weld should be determined using the method for a deep penetration fillet weld. In this example, the angle between the transverse force and weld throat $\theta = 90°$. Provided the groove angle is greater than 60° or U-butt is adopted, the throat thickness is equal to the depth of penetration. 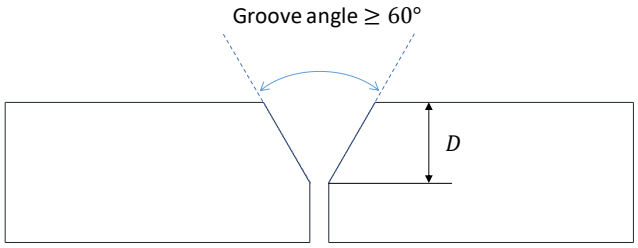 Choose partial butt weld with 12mm ($> 2\sqrt{15.6} = 7.90mm$) throat thickness and grade S355 which match the beam material properties:	$f_u = 470MPa$ for S355 weld $\gamma_{M2} = 1.25$ For UB533x210x92: $b_b = 209.3mm$

Check 1a – Resistance of flange PPBW		
Ref	Calculations	Remark
	The design transverse resistance of weld: $F_{w,T,Rd} = \frac{0.9 f_u}{\gamma_{M2}} a$ $= \frac{0.9 \times 470 \times 12}{1.25} \times 10^{-3}$ $= 4.06 kN/mm$ The tensile resistance of the weld: $F_{t,Rd} = F_{w,T,Rd} b_b$ $= 4.06 \times 209.3$ $= 849.93 kN > \sum F_{t,Rd} = 631.01 kN$	OK

Note:

Welding cannot be done behind the plate within the flange of the primary beam.

Check 2a – Moment resistance (Tension zone T-stubs)		
Ref	Calculations	Remark
	Bolt spacings: End distance: $e_x = 60mm$ Edge distance: $e = 75mm$ Spacing (gauge): $w = 100mm$ Spacing row 1 – 2: $p_{1-2} = 100mm$ Spacing row 2 – 3:$p_{2-3} = 313.1mm$ 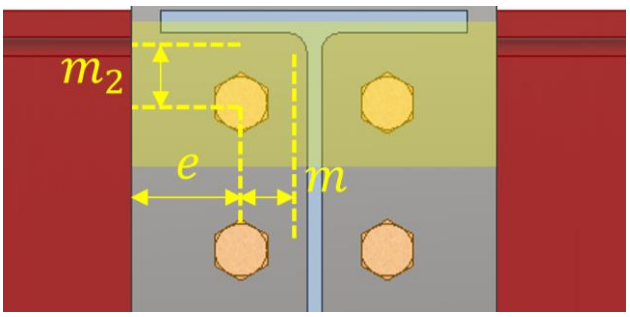 	
SCI_P398 SS EN1993-1-8	**Bolt row 1:** **End plate in bending** $m = m_p = 38.55mm$ $e = 75mm$ $m_2 = e_x - t_{fb} - 0.8s_f$ $= 60 - 15.6 - 0.8 \times 12$ $= 34.8mm$ Based on Figure 6.11 of SS EN1993-1-8: Values of α for stiffened column flanges and end-plates, $\alpha = 7.5$ For pair of bolts in a column flange below a stiffener (or cap plate) or in an end plate below the beam flange: The **circular patterns** effective length for: Circular yielding: $l_{eff,cp} = 2\pi m = 2\pi \times 38.55 = 242.22mm$ The **non-circular patterns** effective length for: Side yielding near beam flange or a stiffener: $l_{eff,nc} = \alpha m = 7.5 \times 38.55 = 289.13mm$	$m_p = (w - t_{wb} - 2 \times 0.8s_w)/2$ $= (100 - 10.1 - 2 \times 0.8 \times 8)/2$ $= 38.55mm$ $\lambda_1 = \frac{m}{m + e}$ $= \frac{38.55}{38.55 + 75}$ $= 0.34$ $\lambda_2 = \frac{m_2}{m + e}$ $= \frac{34.8}{38.55 + 75}$ $= 0.31$

Check 2a – Moment resistance (Tension zone T-stubs)		
Ref	Calculations	Remark
SCI_P398 SS EN1993-1-8	Effective length for mode 1: $l_{eff,1} = \min(l_{eff,cp}; l_{eff,nc}) = 242.22mm$ Effective length for mode 2: $l_{eff,2} = l_{eff,nc} = 289.13mm$ Mode 1 Complete flange yielding resistance: $M_{pl,1,Rd} = \frac{0.25 \sum l_{eff,1}\, t_p^2 f_y}{\gamma_{M0}}$ $= \frac{0.25 \times 242.22 \times 15^2 \times 355}{1.0}$ $= 4836767Nmm$ $n = \min\,(1.25m; e)$ $= \min(48.19; 75)$ $= 48.19mm$ Method 1: $F_{T,1,Rd} = \frac{4M_{pl,1,Rd}}{m}$ $= \frac{4 \times 4836767}{38.55} \times 10^{-3}$ $= 501.87kN$ Method 2: $F_{T,1,Rd} = \frac{(8n - 2e_w)M_{pl,1,Rd}}{2mn - e_w(m+n)}$ $= \frac{(8 \times 48.19 - 2 \times 11) \times 4836767}{2 \times 38.55 \times 48.19 - 11 \times (38.55 + 48.19)} \times 10^{-3}$ $= 636.75kN$	$t_p = 15mm$ As $t_p < 16mm$, $f_y = 355MPa$ Grade 8.8 M24 bolts are used: Diameter of washer: $d_w = 44mm$ $e_w = \frac{d_w}{4} = 11mm$

Check 2a – Moment resistance (Tension zone T-stubs)		
Ref	Calculations	Remark
	Mode 2 Bolt failure with flange yielding resistance: $M_{pl,2,Rd} = \frac{0.25 \sum l_{eff,2}\, t_p^2 f_y}{\gamma_{M0}}$ $= \frac{0.25 \times 289.13 \times 15^2 \times 355}{1.0}$ $= 5773465 Nmm$ $F_{t,Rd} = \frac{k_2 f_{ub} A_s}{\gamma_{M2}}$ $= \frac{0.9 \times 800 \times 353}{1.25}$ $= 203328 N$ $\sum F_{t,Rd} = 2 \times F_{t,Rd} = 2 \times 203328$ $= 406656 N$ $F_{T,2,Rd} = \frac{2M_{pl,2,Rd} + n \sum F_{t,Rd}}{m + n}$ $= \frac{2 \times 5773465 + 48.19 \times 406656}{38.55 + 48.19} \times 10^{-3}$ $= 359.05 kN$ Mode 3 Bolt failure resistance: $F_{T,3,Rd} = \sum F_{t,Rd} = 2F_{t,Rd}$ $= 2 \times 203328 \times 10^{-3}$ $= 406.66 kN$ Resistance of end plate in bending: $F_{t,ep,Rd} = \min\{F_{T,1,Rd}; F_{T,2,Rd}; F_{T,3,Rd}\}$ $= \min(501.87; 359.05; 406.66\}$ $= 359.05 kN$	For Grade 8.8 M24 bolts: $k_2 = 0.9$ Ultimate strength: $f_{ub} = 800 MPa$ Shear area: $A_s = 353 mm^2$

Check 2a – Moment resistance (Tension zone T-stubs)		
Ref	Calculations	Remark
SS EN1993-1-8 6.2.6.8 (1)	**Beam web in tension** $F_{t,wb,Rd} = \frac{b_{eff,t,wc} t_{wb} f_{y,b}}{\gamma_{M0}}$ $= \frac{242.22 \times 10.1 \times 355}{1.0} \times 10^{-3}$ $= 868.47kN$ 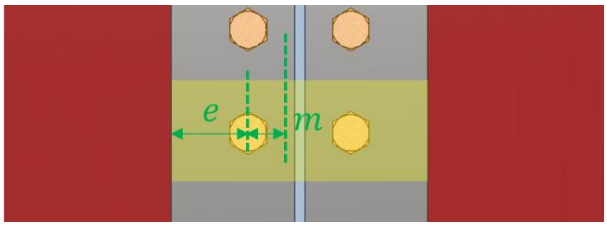 **Bolt row 2:** **End plate in bending** For pair of bolts in a column flange away from any stiffener or in an end plate, away from the flange or any stiffener: The circular patterns effective length for: Circular yielding: $l_{eff,cp} = 2\pi m = 2\pi \times 38.55 = 242.22mm$ The non-circular patterns effective length for: Side yielding: $l_{eff,nc} = 4m + 1.25e = 4 \times 38.55 + 1.25 \times 75$ $= 247.95mm$ Effective length for mode 1: $l_{eff,1} = \min(l_{eff,cp}; l_{eff,nc}) = 242.22mm$ Effective length for mode 2: $l_{eff,2} = l_{eff,nc} = 247.95mm$	$b_{eff,c,wc} = l_{eff}$ $= 242.22mm$ *Conservatively, consider the smallest l_{eff} (6.2.6.8 (2)) For UB 533x210x92: $t_{wb} = 10.1mm$

Check 2a – Moment resistance (Tension zone T-stubs)		
Ref	Calculations	Remark
SCI_P398 SS EN1993-1-8	Mode 1 Complete flange yielding resistance: $M_{pl,1,Rd} = \frac{0.25 \sum l_{eff,1}\, t_p^2 f_y}{\gamma_{M0}}$ $= \frac{0.25 \times 242.22 \times 15^2 \times 355}{1.0}$ $= 4836767 Nmm$ $n = \min\,(1.25m; e)$ $= \min(48.19; 75)$ $= 48.19mm$ Method 1: $F_{T,1,Rd} = \frac{4M_{pl,1,Rd}}{m}$ $= \frac{4 \times 4836767}{38.55} \times 10^{-3}$ $= 501.87kN$ Method 2: $F_{T,1,Rd} = \frac{(8n - 2e_w)M_{pl,1,Rd}}{2mn - e_w(m+n)}$ $= \frac{(8 \times 48.19 - 2 \times 11) \times 4836767}{2 \times 38.55 \times 48.19 - 11 \times (38.55 + 48.19)} \times 10^{-3}$ $= 636.75kN$ Mode 2 Bolt failure with flange yielding resistance: $M_{pl,2,Rd} = \frac{0.25 \sum l_{eff,2}\, t_p^2 f_y}{\gamma_{M0}}$ $= \frac{0.25 \times 247.95 \times 15^2 \times 355}{1.0}$ $= 4951252 Nmm$	

Check 2a – Moment resistance (Tension zone T-stubs)		
Ref	Calculations	Remark
	$F_{T,2,Rd} = \frac{2M_{pl,2,Rd} + n\sum F_{t,Rd}}{m+n}$ $= \frac{2 \times 4951252 + 48.19 \times 406656}{38.55 + 48.19} \times 10^{-3}$ $= 340.09kN$ Mode 3 Bolt failure resistance: $F_{T,3,Rd} = \sum F_{t,Rd} = 2F_{t,Rd}$ $= 2 \times 203328 \times 10^{-3}$ $= 406.66kN$ Resistance of end plate in bending: $F_{t,ep,Rd} = \min\{F_{T,1,Rd}; F_{T,2,Rd}; F_{T,3,Rd}\}$ $= \min(501.87; 340.09; 406.66\}$ $= 340.09kN$	
SS EN1993-1-8 6.2.6.8 (1)	**Beam web in tension** $F_{t,wb,Rd} = \frac{b_{eff,t,wc} t_{wb} f_{y,b}}{\gamma_{M0}}$ $= \frac{242.22 \times 10.1 \times 355}{1.0} \times 10^{-3}$ $= 868.47kN$ 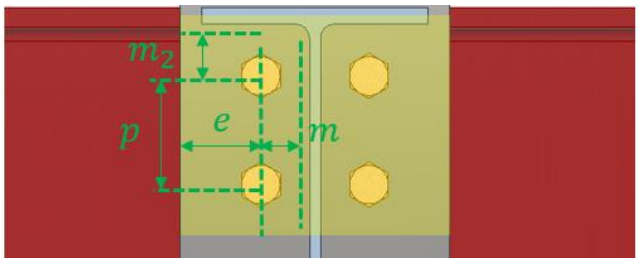 **Bolt row 1 & 2 combined:** **End plate in bending** For bolt row 2, the resistance of it may be limited by the resistance of rows 1 & 2 as a group.	$b_{eff,c,wc} = l_{eff}$ $= 242.22mm$

Check 2a – Moment resistance (Tension zone T-stubs)		
Ref	Calculations	Remark
SS EN1993-1-8 6.2.6.5 Table 6.6	Row 1 is classified as "First bolt-row below tension flange of beam" with effective length: Circular patterns: $l_{eff,cp} = \pi m + p = \pi \times 38.55 + 100$ $= 221.11mm$ Non-circular patterns: $l_{eff,nc} = 0.5p + \alpha m - (2m + 0.625e)$ $= 0.5 \times 100 + 7.5 \times 38.55 - (2 \times 38.55 + 0.625 \times 75)$ $= 215.15mm$ Row 2 is classified as "Other end bolt-row" with effective length: Circular patterns: $l_{eff,cp} = \pi m + p = \pi \times 38.55 + 100$ $= 221.11mm$ Non-circular patterns: $l_{eff,nc} = 2m + 0.625e + 0.5p$ $= 2 \times 38.55 + 0.625 \times 75 + 0.5 \times 100$ $= 173.98mm$ The total effective length for this bolt group combination: $\sum l_{eff,cp} = 221.11 + 221.11 = 442.22mm$ $\sum l_{eff,nc} = 215.15 + 173.98 = 389.13mm$ Effective length for mode 1: $\sum l_{eff,1} = \min\left(\sum l_{eff,cp}; \sum l_{eff,nc}\right)$ $= 389.13mm$ Effective length for mode 2: $\sum l_{eff,2} = \sum l_{eff,nc} = 389.13mm$	

Check 2a – Moment resistance (Tension zone T-stubs)		
Ref	Calculations	Remark
	Mode 1 Complete flange yielding resistance: $M_{pl,1,Rd} = \frac{0.25 \sum l_{eff,1}\, t_p^2 f_y}{\gamma_{M0}}$ $= \frac{0.25 \times 389.13 \times 15^2 \times 355}{1.0}$ $= 7770340 Nmm$ $n = \min\,(1.25m; e)$ $= \min(48.19; 75)$ $= 48.19mm$ Method 1: $F_{T,1,Rd} = \frac{4M_{pl,1,Rd}}{m}$ $= \frac{4 \times 7770340}{38.55} \times 10^{-3}$ $= 806.26kN$ Method 2: $F_{T,1,Rd} = \frac{(8n - 2e_w)M_{pl,1,Rd}}{2mn - e_w(m+n)}$ $= \frac{(8 \times 48.19 - 2 \times 11) \times 7770340}{2 \times 38.55 \times 48.19 - 11 \times (38.55 + 48.19)} \times 10^{-3}$ $= 1022.95kN$ Mode 2 Bolt failure with flange yielding resistance: $M_{pl,2,Rd} = \frac{0.25 \sum l_{eff,2}\, t_p^2 f_y}{\gamma_{M0}}$ $= \frac{0.25 \times 389.13 \times 15^2 \times 355}{1.0}$ $= 7770340 Nmm$	

Check 2a – Moment resistance (Tension zone T-stubs)		
Ref	Calculations	Remark
	$F_{T,2,Rd} = \frac{2M_{pl,2,Rd} + n\sum F_{t,Rd}}{m+n}$ $= \frac{2 \times (7770340 + 48.19 \times 406656)}{38.55 + 48.19} \times 10^{-3}$ $= 631.01kN$ Mode 3 Bolt failure resistance: $F_{T,3,Rd} = \sum F_{t,Rd} = 4F_{t,Rd}$ $= 4 \times 203328 \times 10^{-3}$ $= 813.31kN$ Resistance of end plate in bending: $F_{t,ep,Rd} = \min\{F_{T,1,Rd}; F_{T,2,Rd}; F_{T,3,Rd}\}$ $= \min(806.26; 631.01; 813.31\}$ $= 631.01kN$	
SS EN1993-1-8 6.2.6.8 (1)	**Beam web in tension** $F_{t,wb,Rd} = \frac{b_{eff,t,wc} t_{wb} f_{y,b}}{\gamma_{M0}}$ $= \frac{389.13 \times 10.1 \times 355}{1.0} \times 10^{-3}$ $= 1395.23kN$ The resistance of bolt row 2 is limited to: $F_{t2,Rd} = F_{t1-2,Rd} - F_{t1,Rd} = 631.01 - 359.05$ $= 271.96kN$ **Summary of tension resistance of T-stubs:** **Row** / **Resistance** / **Effective Resistance** Row 1 alone / 359.05kN / 359.05kN Row 2 alone / 340.09kN / 271.96kN Row 1 and 2 / 631.01kN / -	$b_{eff,c,wc} = \sum l_{eff}$ $= 389.13mm$

Check 2b – Moment resistance (Compression zone)		
Ref	Calculations	Remark
	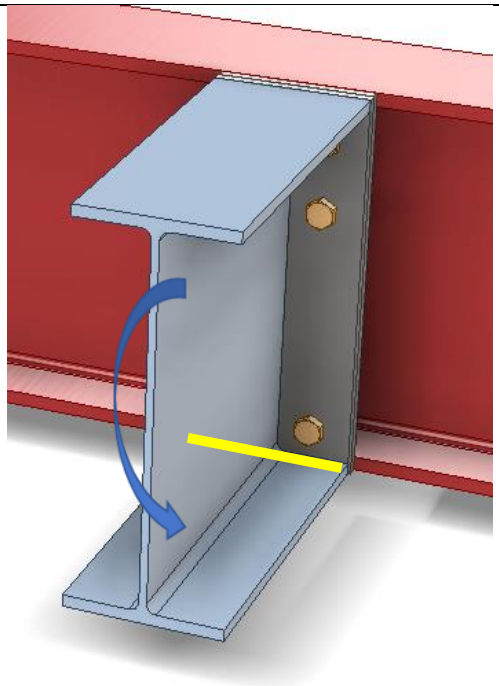	
SS EN1993-1-8 6.2.6.7 (1)	Design moment resistance of the beam cross-section (S355 UB533x210x92): $M_{c,Rd} = 838kNm$ $F_{c,fb,Rd} = \frac{M_{c,Rd}}{h - t_{fb}}$ $= \frac{838}{533.1 - 15.6} \times 10^3$ $= 1619.32kN$	$M_{c,Rd}$ is read from SCI_P363 page D-66 For UB533x210x92: $h_b = 533.1mm$ $t_{fb} = 15.6mm$

Check 2 – Moment resistance		
Ref	Calculations	Remark
SS EN1993-1-8 6.2.7.2 (9)	The effective resistances of bolt rows need to be reduced when the bolt row resistance is greater than $1.9F_{t,Rd}$ $1.9F_{t,Rd} = 1.9 \times 203.33 = 386.32kN$ As all bolt row resistances are lesser than 386.32kN, no reduction is required. **Equilibrium of forces** Total effective tension resistance: $\sum F_{t,Rd} = 359.05 + 271.96$ $= 631.01kN < F_{c,fb,Rd} = 1619.32kN$ Hence, no reduction is required for the tensile resistance. 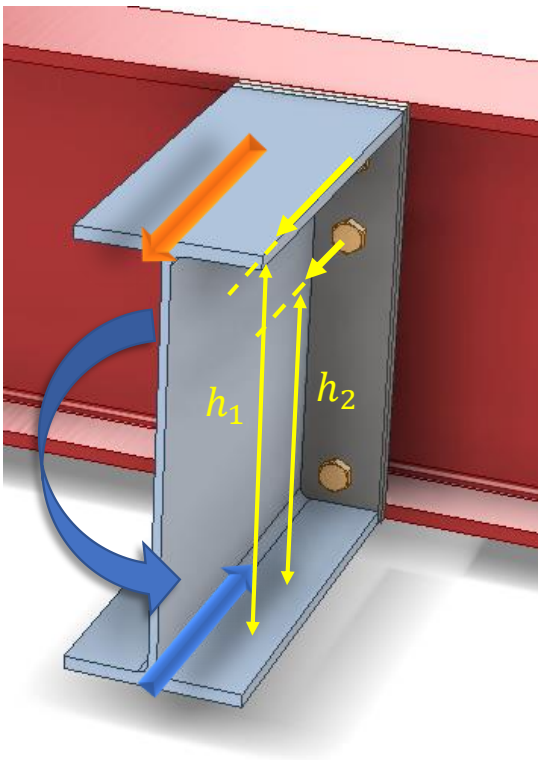 	
SS EN1993-1-8 6.2.7.2 (1)	The moment resistance of the connection may be determined using: $M_{j,Rd} = \sum_r h_r F_{t,r,Rd}$	

Check 2 – Moment resistance		
Ref	Calculations	Remark
	Taking the center of compression to be at the mid-thickness of the compression flange of the beam: $h_1 = h_b - \left(\frac{t_{fb}}{2}\right) - e_x$ $= 533.1 - \left(\frac{15.6}{2}\right) - 60$ $= 465.3mm$ $h_2 = h_1 - 100 = 365.3mm$ $M_{j,Rd} = h_1 F_{1,r,Rd} + h_2 F_{2,r,Rd}$ $= (465.3 \times 359.05 + 356.3 \times 271.96) \times 10^{-3}$ $= 266.41kNm > M_{Ed} = 200kNm$	OK

Check 3 – Shear resistance of bolt group		
Ref	Calculations	Remark
	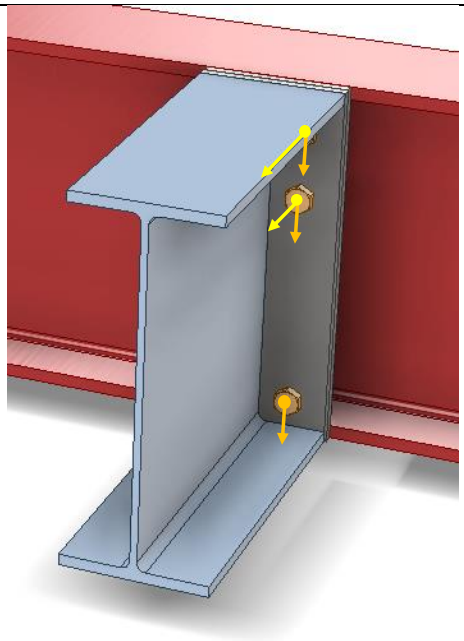	
SCI_P398	For Grade 8.8 M24 bolts: $\alpha_v = 0.6$ $A_s = 353mm^2$ $f_{ub} = 800MPa$ Shear resistance of an individual bolt: $F_{v,Rd} = \frac{\alpha_v f_{ub} A_s}{\gamma_{M2}}$ $= \frac{0.6 \times 800 \times 353}{1.25} \times 10^{-3}$ $= 135.55kN$ $k_1 = \min\left(\frac{2.8e_2}{d_0} - 1.7; 2.5\right)$ $= \min\left(2.8 \times \frac{75}{26} - 1.7; 2.5\right)$ $= 2.5$ $\alpha_b = \min\left(\frac{p_1}{3d_0} - \frac{1}{4}; \frac{e_1}{3d_0}; \frac{f_{ub}}{f_u}; 1.0\right)$ $= \min\left(\frac{100}{3 \times 26} - \frac{1}{4}; \frac{60}{3 \times 26}; \frac{800}{510}; 1.0\right)$ $= 0.77$	

Check 3 – Shear resistance of bolt group		
Ref	Calculations	Remark
	Bearing resistance of an individual bolt: $F_{b,Rd} = \frac{k_1 \alpha_b f_u d t}{\gamma_{M2}}$ $= \frac{2.5 \times 0.77 \times 510 \times 24 \times 15}{1.25}$ $= 282.46kN$ Hence, resistance of an individual bolt: $F_{Rd} = \min(F_{v,Rd}; F_{b,Rd})$ $= \min(135.55; 282.46)$ $= 135.55kN$ According to SCI_P398, the shear resistance of the upper rows may be taken conservatively as 28% of the shear resistance without tension, thus the shear resistance of the bolt group is: $V_{Rd} = (2 + 4 \times 0.28) \times F_{Rd}$ $= 3.12 \times 135.55$ $V_{Rd} = 422.92kN > V_{Ed} = 300kN$	OK

Note:

In this example, the primary beam is an edge beam which supports secondary beam on one side only. Torsion on the primary beam should be checked during the beam design.

2.4.12 Example 18 – Beam-to-Beam connection (moment-resisting connection) in major axis and/or minor axis (section b)

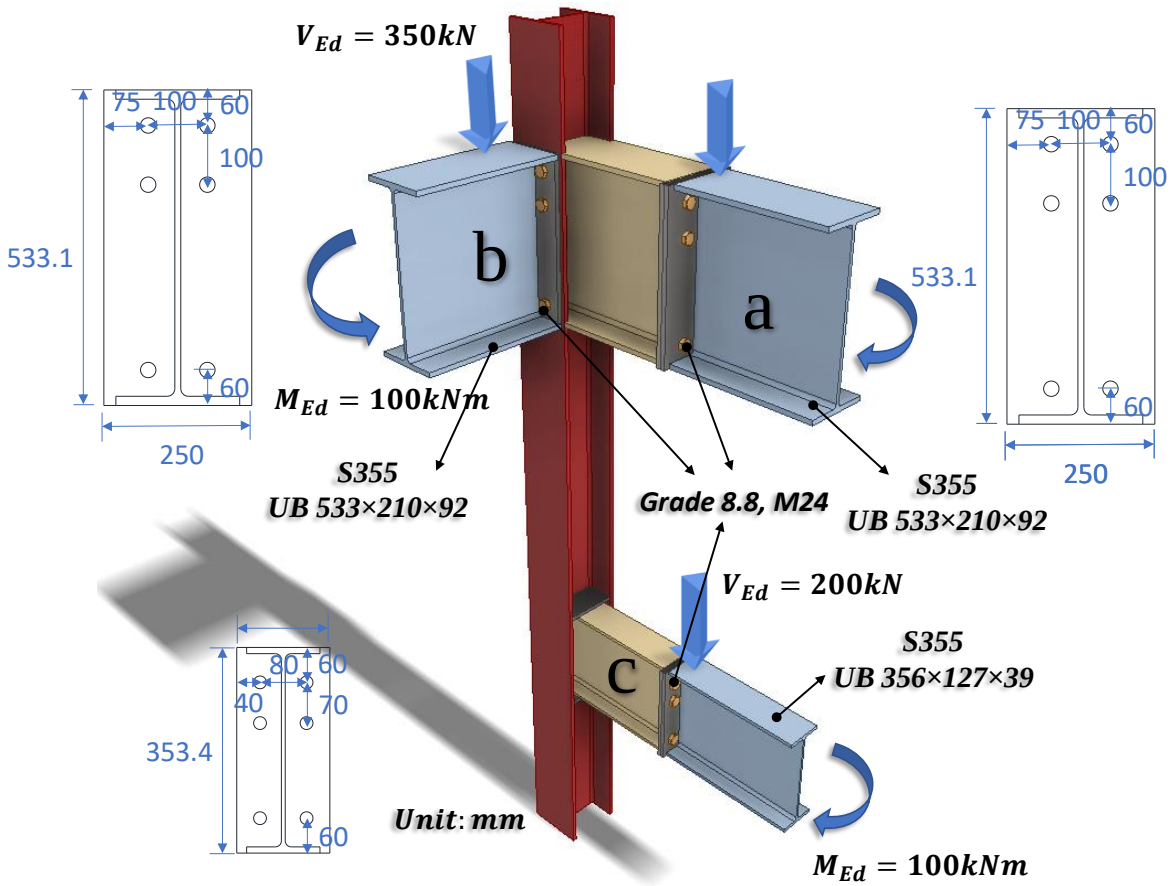

As the design calculations for 2.4.12a is similar to that of 2.4.11. Refer to 2.4.11 for details.

Check 1 – Weld connecting beam web		
Ref	Calculations	Remark
	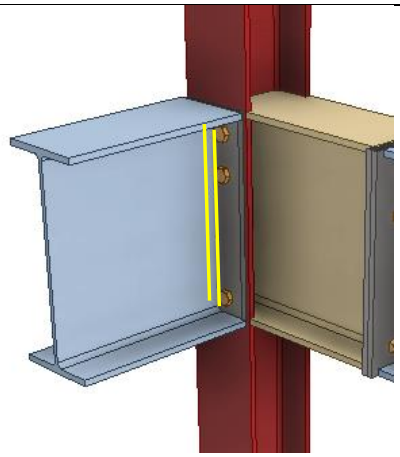	
SS EN1993-1-8 6.2.2 (1)	In weld connections and bolted connections with end-plates, the welds connecting the beam web should be designed to transfer the shear force from the connected beam to the joint, without any assistance from the welds connecting the beam flanges.	
SS EN1993	Length of fillet weld connecting beam web: $L_w = 2d_b$ $= 2 \times 476.5$ $= 953mm$	For UB533×210×92: Depth between fillets: $d_b = 476.5mm$
SCI_P363	Choose fillet weld with 8mm leg length, 5.6mm throat thickness and grade S355: Longitudinal resistance: $F_{w,L,Rd} = 1.35kN/mm$ Transverse resistance: $F_{w,T,Rd} = 1.65kN/mm$ Shear resistance: $V_{Rd} = F_{w,L,Rd}L_w$ $= 1.35 \times 953$ $= 1286.55kN > V_{Ed} = 350kN$	OK

Check 1a– Resistance of PPBW on beam flange and end plate		
Ref	Calculations	Remark
	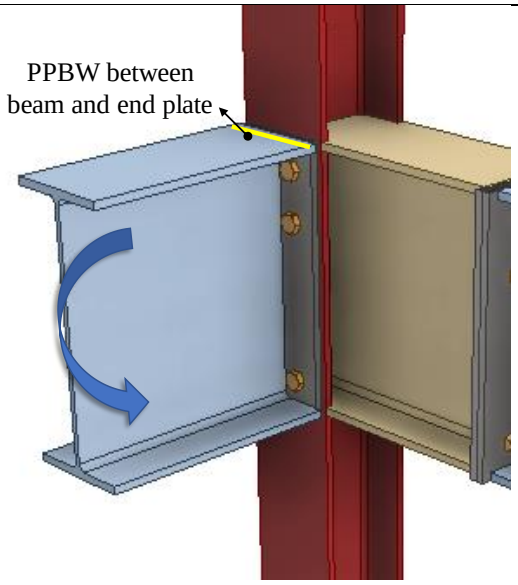	
BS 5950-1 6.9.2	**Partial penetration butt weld resistance:** The minimum throat size of a longitudinal partial penetration butt weld should be $2\sqrt{t}$ (in mm), where t is the thickness of the thinner part of joint.	
SS EN1993-1-1 4.7.2 (1)	The design resistance of a partial penetration butt weld should be determined using the method for a deep penetration fillet weld. In this example, the angle between the transverse force and weld throat $\theta = 90°$. Provided the groove angle is greater than 60° or U-butt is adopted, the throat thickness is equal to the depth of penetration. 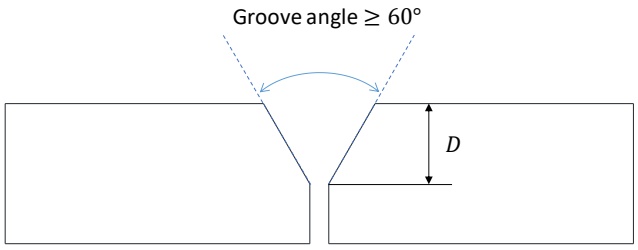 Choose partial butt weld with 12mm ($> 2\sqrt{15.6} = 7.90mm$) throat thickness and grade S355 which match the beam material properties:	$f_u = 470MPa$ for S355 weld $\gamma_{M2} = 1.25$ For UB533x210x92: $b_b = 209.3mm$

Check 1a– Resistance of PPBW on beam flange and end plate		
Ref	Calculations	Remark
	The design transverse resistance of weld: $F_{w,T,Rd} = \frac{0.9 f_u}{\gamma_{M2}} a$ $= \frac{0.9 \times 470 \times 12}{1.25} \times 10^{-3}$ $= 4.06 kN/mm$ The tensile resistance of the weld: $F_{t,Rd} = F_{w,T,Rd} b_b$ $= 4.06 \times 209.3$ $= 849.76 kN > \sum F_{t,Rd} = 409.22 kN$	OK

Check 2 – Beam shear check		
Ref	Calculations	Remark
	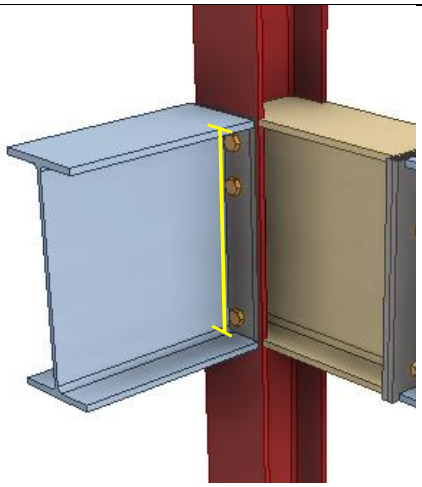 For UB533×210×92: Depth: $h_b = 533.1mm$ Width: $b_b = 209.3mm$ Web thickness: $t_{wb} = 10.1mm$ Flange thickness: $t_{fb} = 15.6mm$ Root radius:$r_b = 12.7mm$ Depth between fillets: $d_b = 476.5mm$ Cross-sectional area: $A_b = 11700mm^2$	
SS EN1993	Shear area of beam: $A_v = A_b - 2b_b t_{fb} + (t_{wb} + 2r_b)t_{fb}$ $= 11700 - 2 \times 209.3 \times 15.6 + (10.1 + 2 \times 12.7) \times 15.6$ $= 5723.64mm^2$ Shear resistance: $V_{pl,Rd} = A_v(\frac{f_{yb}}{\sqrt{3}})/\gamma_{M0}$ $= 5723.64 \times \left(\frac{355}{\sqrt{3}}\right)$ $= 1173.11kN > V_{Ed} = 350kN$	OK

Check 3a – Moment resistance (Tension zone T-stubs)		
Ref	Calculations	Remark
	For UC203x203x60: Depth: $h_c = 209.6mm$ Width: $b_c = 205.8mm$ Web thickness: $t_{wc} = 9.4mm$ Flange thickness: $t_{fc} = 14.2mm$ Root radius: $r_c = 10.2mm$ Depth between fillets: $d_c = 160.8mm$ Cross-sectional area: $A_c = 7640mm^2$ Bolt spacings: End distance: $e_x = 60mm$ Edge distance (end plate): $e_p = 75mm$ Spacing (gauge): $w = 100mm$ Edge distance (column flange): $e_c = 0.5 \times (b_c - w) = 52.90mm$ Spacing row 1 – 2: $p_{1-2} = 100mm$ Spacing row 2 – 3:$p_{2-3} = 313.1mm$ 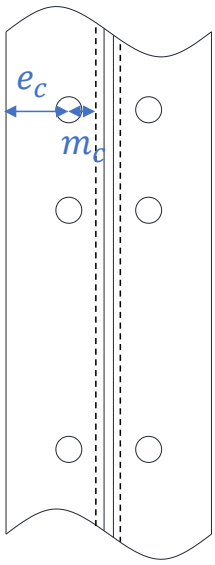 	
SCI_P398 SS EN1993-1-8	**Bolt row 1:** **Column flange in bending** $m = m_c = \frac{w - t_{wc} - 2 \times 0.8r_c}{2}$ $= \frac{100 - 9.4 - 2 \times 0.8 \times 10.2}{2}$ $= 37.14mm$	

Check 3a – Moment resistance (Tension zone T-stubs)		
Ref	Calculations	Remark
	$e_{min} = \min(e_c; e_p)$ $= \min(52.9; 75)$ $= 52.9mm$ For pair of bolts in a column flange away from any stiffener: The **circular patterns** effective length for: Circular yielding: $l_{eff} = 2\pi m = 2 \times \pi \times 37.14 = 233.36mm$ The **non-circular** patterns effective length for: Side yielding: $l_{eff} = 4m + 1.25e = 4 \times 37.14 + 1.25 \times 52.9$ $= 214.69mm$ Effective length for mode 1: $l_{eff,1} = \min(l_{eff,cp}; l_{eff,nc}) = 214.69mm$ Effective length for mode 2: $l_{eff,2} = l_{eff,nc} = 214.69mm$	
SCI_P398 SS EN1993-1-8	Mode 1 Complete flange yielding resistance: $M_{pl,1,Rd} = \frac{0.25 \sum l_{eff,1}\, t_{fc}^2 f_y}{\gamma_{M0}}$ $= \frac{0.25 \times 214.69 \times 14.2^2 \times 355}{1.0}$ $= 3841906Nmm$ $n = \min(1.25m; e)$ $= \min(46.43; 52.9)$ $= 46.43mm$	$t_{fc} = 14.2mm$ $< 16mm$ $f_y = 355MPa$ Grade 8.8 M24 bolts are used: Diameter of washer: $d_w = 44mm$ $e_w = \frac{d_w}{4} = 11mm$

Check 3a – Moment resistance (Tension zone T-stubs)		
Ref	Calculations	Remark
	Method 1: $F_{T,1,Rd} = \frac{4M_{pl,1,Rd}}{m}$ $= \frac{4 \times 3841906}{37.14} \times 10^{-3}$ $= 413.78kN$ Method 2: $F_{T,1,Rd} = \frac{(8n - 2e_w)M_{pl,1,Rd}}{2mn - e_w(m+n)}$ $= \frac{(8 \times 46.43 - 2 \times 11) \times 3841906}{2 \times 37.14 \times 46.43 - 11 \times (37.14 + 46.43)} \times 10^{-3}$ $= 530.74kN$ Mode 2 Bolt failure with flange yielding resistance: $M_{pl,2,Rd} = \frac{0.25 \sum l_{eff,2}\, t_{fc}^2 f_y}{\gamma_{M0}}$ $= \frac{0.25 \times 214.69 \times 14.2^2 \times 355}{1.0}$ $= 3841906Nmm$ $F_{t,Rd} = \frac{k_2 f_{ub} A_s}{\gamma_{M2}}$ $= \frac{0.9 \times 800 \times 353}{1.25}$ $= 203328N$ $\sum F_{t,Rd} = 2 \times F_{t,Rd} = 2 \times 203328$ $= 406656N$	For Grade 8.8 M24 bolts: $k_2 = 0.9$ Ultimate strength: $f_{ub} = 800MPa$ Shear area: $A_s = 353mm^2$

Check 3a – Moment resistance (Tension zone T-stubs)		
Ref	Calculations	Remark
	$F_{T,2,Rd} = \frac{2M_{pl,2,Rd} + n\sum F_{t,Rd}}{m+n}$ $= \frac{2 \times 3841906 + 46.43 \times 406656}{37.14 + 46.43} \times 10^{-3}$ $= 317.87kN$ Mode 3 Bolt failure resistance: $F_{T,3,Rd} = \sum F_{t,Rd} = 2F_{t,Rd}$ $= 2 \times 203328 \times 10^{-3}$ $= 406.66kN$ Resistance of column flange in bending: $F_{t,fc,Rd} = \min\{F_{T,1,Rd}; F_{T,2,Rd}; F_{T,3,Rd}\}$ $= \min(413.78; 317.87; 406.66\}$ $= 317.87kN$	
SS EN1993-1-8 6.2.6.3 (3)	**Column web in transverse tension** For a bolted connection, the effective width $b_{eff,c,wc}$ of column web should be taken as equal to the effective length of equivalent T-stub representing the column flange $\therefore b_{eff,c,wc} = l_{eff,1} = 214.69mm$	
Table 5.4	For single-side beam, the transformation parameter $\beta \approx 1$	
Table 6.3	For $\beta = 1$, $\omega = \omega_1 = \frac{1}{\sqrt{1 + 1.3\left(\frac{b_{eff,c,wc}t_{wc}}{A_{vc}}\right)^2}}$ $= \frac{1}{\sqrt{1 + 1.3 \times \left(214.69 \times \frac{9.4}{2218.44}\right)^2}}$ $= 0.69$	Shear resistance of column: $A_{vc} = A_c - 2b_c t_{fc} + (t_{wc} + 2r_c)t_{fc}$ $= 7640 - 2 \times 205.8 \times 14.2 + (9.4 + 2 \times 10.2) \times 14.2$ $= 2218.44mm^2$

Check 3a – Moment resistance (Tension zone T-stubs)		
Ref	Calculations	Remark
6.2.6.3	Design resistance of unstiffened column web to transverse tension: $F_{t,wc,Rd} = \frac{\omega b_{eff,t,wc} t_{wc} f_{y,wc}}{\gamma_{M0}}$ $= \frac{0.69 \times 214.69 \times 9.4 \times 355}{1.0} \times 10^{-3}$ $= 497.25kN$ **End plate in bending** $m = m_p = \frac{w - t_{wb} - 2 \times 0.8 s_w}{2}$ $= \frac{100 - 10.1 - 2 \times 0.8 \times 8}{2}$ $= 38.55mm$ $e = e_p = 75mm$ $m_2 = e_x - t_{fb} - 0.8 s_f$ $= 60 - 15.6 - 0.8 \times 12$ $= 34.8mm$ Based on Figure 6.11 of SS EN1993-1-8: Values of α for stiffened column flanges and end-plates, $\alpha = 7.2$ For pair of bolts in a column flange below a stiffener (or cap plate) or in an end plate below the beam flange: The **circular patterns** effective length for: Circular yielding: $l_{eff,cp} = 2\pi m = 2\pi \times 38.55 = 242.22mm$ The **non-circular patterns** effective length for: Side yielding near beam flange or a stiffener: $l_{eff,nc} = \alpha m = 7.2 \times 38.55 = 277.56mm$	$\lambda_1 = \frac{m}{m+e}$ $= \frac{38.55}{38.55 + 75}$ $= 0.34$ $\lambda_2 = \frac{m_2}{m+e}$ $= \frac{34.8}{38.55 + 75}$ $= 0.31$

Check 3a – Moment resistance (Tension zone T-stubs)		
Ref	Calculations	Remark
SCI_P398 SS EN1993-1-8	Effective length for mode 1: $l_{eff,1} = \min(l_{eff,cp}; l_{eff,nc}) = 242.22mm$ Effective length for mode 2: $l_{eff,2} = l_{eff,nc} = 277.56mm$ Mode 1 Complete flange yielding resistance: $M_{pl,1,Rd} = \frac{0.25 \sum l_{eff,1}\, t_p^2 f_y}{\gamma_{M0}}$ $= \frac{0.25 \times 242.22 \times 15^2 \times 355}{1.0}$ $= 4836767Nmm$ $n = \min\,(1.25m; e)$ $= \min(48.19; 75)$ $= 48.19mm$ Method 1: $F_{T,1,Rd} = \frac{4M_{pl,1,Rd}}{m}$ $= \frac{4 \times 4836767}{38.55} \times 10^{-3}$ $= 501.87kN$ Method 2: $F_{T,1,Rd} = \frac{(8n - 2e_w)M_{pl,1,Rd}}{2mn - e_w(m+n)}$ $= \frac{(8 \times 48.19 - 2 \times 11) \times 4836767}{2 \times 38.55 \times 48.19 - 11 \times (38.55 + 48.19)} \times 10^{-3}$ $= 636.75kN$	$t_p = 15mm$ $< 16mm$ $f_y = 355MPa$

Check 3a – Moment resistance (Tension zone T-stubs)		
Ref	Calculations	Remark
	Mode 2 Bolt failure with flange yielding resistance: $M_{pl,2,Rd} = \frac{0.25 \sum l_{eff,2}\, t_p^2 f_y}{\gamma_{M0}}$ $= \frac{0.25 \times 277.56 \times 15^2 \times 355}{1.0}$ $= 5542526 Nmm$ $F_{T,2,Rd} = \frac{2M_{pl,2,Rd} + n \sum F_{t,Rd}}{m+n}$ $= \frac{2 \times 5542526 + 48.19 \times 406656}{38.55 + 48.19} \times 10^{-3}$ $= 353.72 kN$ Mode 3 Bolt failure resistance: $F_{T,3,Rd} = \sum F_{t,Rd} = 2F_{t,Rd}$ $= 2 \times 203328 \times 10^{-3}$ $= 406.66 kN$ Resistance of end plate in bending: $F_{t,ep,Rd} = \min\{F_{T,1,Rd}; F_{T,2,Rd}; F_{T,3,Rd}\}$ $= \min(501.87; 353.72; 406.66\}$ $= 353.72 kN$	
SS EN1993-1-8 6.2.6.8 (1)	**Beam web in tension** $F_{t,wb,Rd} = \frac{b_{eff,t,wc} t_{wb} f_{y,b}}{\gamma_{M0}}$ $= \frac{242.22 \times 10.1 \times 355}{1.0} \times 10^{-3}$ $= 868.47 kN$	$b_{eff,c,wc} = l_{eff}$ $= 242.22 mm$ *Conservatively, consider the smallest l_{eff} (6.2.6.8 (2))

Check 3a – Moment resistance (Tension zone T-stubs)		
Ref	Calculations	Remark
	Summary of resistance of T-stubs for bolt row 1 Column flange bending $F_{t,fc,Rd} = 317.87kN$ Column web in tension $F_{t,wc,Rd} = 497.25kN$ End plate in bending $F_{t,ep,Rd} = 353.72kN$ Beam web in tension $F_{t,wb,Rd} = 868.47kN$ ∴The resistance of bolt row 1: $F_{t,1,Rd} = 317.87kN$	
	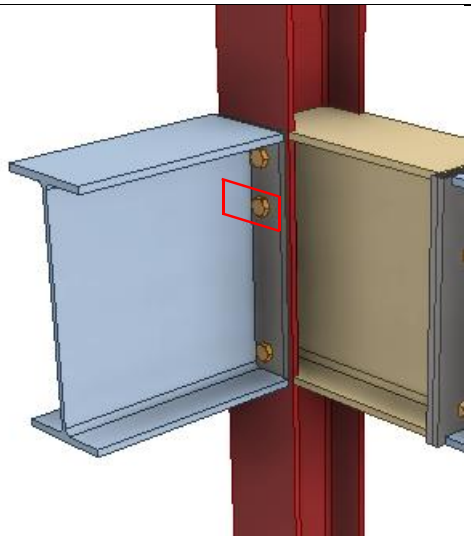 **Bolt row 2:** **Column flange in bending** The resistance of the column flange in bending is same as that for bolt row 1. $F_{t,fc,Rd} = 317.87kN$ **Column web in transverse tension** The resistance of the column web in transverse tension is same as that for bolt row 1 $F_{t,wc,Rd} = 497.25kN$ **End plate in bending** For pair of bolts in a column flange away from any stiffener or in an end plate, away from the flange or any stiffener:	

Check 3a – Moment resistance (Tension zone T-stubs)		
Ref	Calculations	Remark
SCI_P398 SS EN1993-1-8	The circular patterns effective length for: Circular yielding: $l_{eff,cp} = 2\pi m = 2\pi \times 38.55 = 242.22mm$ The non-circular patterns effective length for: Side yielding: $l_{eff,nc} = 4m + 1.25e = 4 \times 38.55 + 1.25 \times 75$ $= 247.95mm$ Effective length for mode 1: $l_{eff,1} = \min(l_{eff,cp}; l_{eff,nc}) = 242.22mm$ Effective length for mode 2: $l_{eff,2} = l_{eff,nc} = 247.95mm$ Mode 1 Complete flange yielding resistance: $M_{pl,1,Rd} = \frac{0.25 \sum l_{eff,1}\, t_p^2 f_y}{\gamma_{M0}}$ $= \frac{0.25 \times 242.22 \times 15^2 \times 355}{1.0}$ $= 4836767Nmm$ $n = \min\,(1.25m; e)$ $= \min(48.19; 75)$ $= 48.19mm$ Method 1: $F_{T,1,Rd} = \frac{4M_{pl,1,Rd}}{m}$ $= \frac{4 \times 4836767}{38.55} \times 10^{-3}$ $= 501.87kN$	

Check 3a – Moment resistance (Tension zone T-stubs)		
Ref	Calculations	Remark
	Method 2: $F_{T,1,Rd} = \frac{(8n - 2e_w)M_{pl,1,Rd}}{2mn - e_w(m+n)}$ $= \frac{(8 \times 48.19 - 2 \times 11) \times 4836767}{2 \times 38.55 \times 48.19 - 11 \times (38.55 + 48.19)} \times 10^{-3}$ $= 636.75kN$ Mode 2 Bolt failure with flange yielding resistance: $M_{pl,2,Rd} = \frac{0.25 \sum l_{eff,2}\, t_p^2 f_y}{\gamma_{M0}}$ $= \frac{0.25 \times 247.95 \times 15^2 \times 355}{1.0}$ $= 4951252Nmm$ $F_{T,2,Rd} = \frac{2M_{pl,2,Rd} + n \sum F_{t,Rd}}{m+n}$ $= \frac{24951252 + 48.19 \times 406656}{38.55 + 48.19} \times 10^{-3}$ $= 340.09kN$ Mode 3 Bolt failure resistance: $F_{T,3,Rd} = \sum F_{t,Rd} = 2F_{t,Rd}$ $= 2 \times 203328 \times 10^{-3}$ $= 406.66kN$ Resistance of end plate in bending: $F_{t,ep,Rd} = \min\{F_{T,1,Rd}; F_{T,2,Rd}; F_{T,3,Rd}\}$ $= \min(501.87; 340.09; 406.66\}$ $= 340.09kN$	

Check 3a – Moment resistance (Tension zone T-stubs)		
Ref	Calculations	Remark
SS EN1993-1-8 6.2.6.8 (1)	**Beam web in tension** $F_{t,wb,Rd} = \frac{b_{eff,t,wc} t_{wb} f_{y,b}}{\gamma_{M0}}$ $= \frac{242.22 \times 10.1 \times 355}{1.0} \times 10^{-3}$ $= 868.47kN$ The above resistance for bolt row 2 all considered the resistance of the row acting alone. The resistance of bolt row 2 may be limited by the resistance of combined blot row 1 and 2. 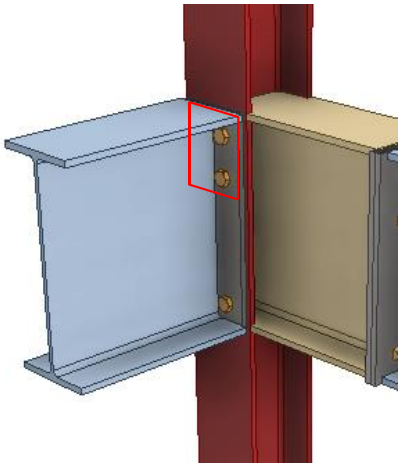 **Bolt rows 1 and 2 combined** **Column flange in bending** $m = m_c = 37.14mm$ $e_{min} = 52.9mm$ $p = 100mm$ For top row in an unstiffened column: The **circular patterns** effective length for: Bolt groups close to free edge: $l_{eff,cp} = 2e_1 + p$ $*$ e_1 is large for the column, so this case will not be critical	$b_{eff,c,wc} = l_{eff}$ $= 242.22mm$

Check 3a – Moment resistance (Tension zone T-stubs)		
Ref	Calculations	Remark
SCI_P398 SS EN1993-1-8	Bolt groups away from a free edge: $l_{eff,cp} = \pi m + p = \pi \times 37.14 + 100$ $= 216.68mm$ $\sum l_{eff,cp} = 2 \times 216.68 = 433.36mm$ The non-circular patterns effective length for: Bolt groups close to free edge: $l_{eff,nc} = e_1 + 0.5p$ $*$ e_1 is large so this will not be critical Bolt groups away from a free edge: $l_{eff,nc} = 2m + 0.625e + 0.5p$ $= 2 \times 37.14 + 0.625 \times 52.9 + 0.5 \times 100$ $= 157.34mm$ $\sum l_{eff,nc} = 2 \times 157.34 = 314.69mm$ Effective length for mode 1: $\sum l_{eff,1} = \min\left(\sum l_{eff,cp}\,;\sum l_{eff,nc}\right)$ $= 314.69mm$ Effective length for mode 2: $\sum l_{eff,2} = \sum l_{eff,nc} = 314.69mm$ Mode 1 Complete flange yielding resistance: $M_{pl,1,Rd} = \dfrac{0.25 \sum l_{eff,1}\, t_{fc}^2 f_y}{\gamma_{M0}}$ $= \dfrac{0.25 \times 314.69 \times 14.2^2 \times 355}{1.0}$ $= 5631461Nmm$	

Check 3a – Moment resistance (Tension zone T-stubs)		
Ref	Calculations	Remark
	$n = \min(1.25m; e)$ $= \min(46.43; 52.9)$ $= 46.43mm$ Method 1: $F_{T,1,Rd} = \frac{4M_{pl,1,Rd}}{m}$ $= \frac{4 \times 5631461}{37.14} \times 10^{-3}$ $= 606.51kN$ Method 2: $F_{T,1,Rd} = \frac{(8n - 2e_w)M_{pl,1,Rd}}{2mn - e_w(m+n)}$ $= \frac{(8 \times 46.43 - 2 \times 11) \times 5631461}{2 \times 37.14 \times 46.43 - 11 \times (37.14 + 46.43)}$ $\times 10^{-3}$ $= 777.96kN$ Mode 2 Bolt failure with flange yielding resistance: $M_{pl,2,Rd} = \frac{0.25 \sum l_{eff,2}\, t_{fc}^2 f_y}{\gamma_{M0}}$ $= \frac{0.25 \times 314.69 \times 14.2^2 \times 355}{1.0}$ $= 5631461Nmm$ $\sum F_{t,Rd} = 4 \times F_{t,Rd} = 4 \times 203328$ $= 813312N$ $F_{T,2,Rd} = \frac{2M_{pl,2,Rd} + n \sum F_{t,Rd}}{m+n}$ $= \frac{2 \times 5631461 + 46.43 \times 813312}{37.14 + 46.43} \times 10^{-3}$ $= 586.62kN$	

Check 3a – Moment resistance (Tension zone T-stubs)		
Ref	Calculations	Remark
	Mode 3 Bolt failure resistance: $F_{T,3,Rd} = \sum F_{t,Rd} = 4F_{t,Rd}$ $= 4 \times 203328 \times 10^{-3}$ $= 813.31kN$ Resistance of column flange in bending: $F_{t,fc,Rd} = \min\{F_{T,1,Rd}; F_{T,2,Rd}; F_{T,3,Rd}\}$ $= \min(606.51; 586.62; 813.31\}$ $= 586.62kN$	
SS EN1993-1-8 6.2.6.3 (3)	**Column web in transverse tension** For a bolted connection, the effective width $b_{eff,c,wc}$ of column web should be taken as equal to the effective length of equivalent T-stub representing the column flange $\therefore b_{eff,c,wc} = l_{eff,1} = 314.69mm$	
Table 6.3	$\omega = \omega_1 = \dfrac{1}{\sqrt{1 + 1.3\left(\dfrac{b_{eff,c,wc}t_{wc}}{A_{vc}}\right)^2}}$ $= \dfrac{1}{\sqrt{1 + 1.3 \times \left(314.69 \times \dfrac{9.4}{2218.44}\right)^2}}$ $= 0.55$	
6.2.6.3	Design resistance of unstiffened column web to transverse tension: $F_{t,wc,Rd} = \dfrac{\omega b_{eff,t,wc} t_{wc} f_{y,wc}}{\gamma_{M0}}$ $= \dfrac{0.55 \times 314.69 \times 9.4 \times 355}{1.0} \times 10^{-3}$ $= 577.08kN$	

Check 3a – Moment resistance (Tension zone T-stubs)		
Ref	Calculations	Remark
SS EN1993-1-8 6.2.6.5 Table 6.6	**End plate in bending** Row 1 is classified as "First bolt-row below tension flange of beam" with effective length: Circular patterns: $l_{eff,cp} = \pi m + p = \pi \times 38.55 + 100$ $= 221.11mm$ Non-circular patterns: $l_{eff,nc} = 0.5p + \alpha m - (2m + 0.625e)$ $= 0.5 \times 100 + 7.2 \times 38.55 - (2 \times 38.55 + 0.625 \times 75)$ $= 203.59mm$ Row 2 is classified as "Other end bolt-row" with effective length: Circular patterns: $l_{eff,cp} = \pi m + p = \pi \times 38.55 + 100$ $= 221.11mm$ Non-circular patterns: $l_{eff,nc} = 2m + 0.625e + 0.5p$ $= 2 \times 38.55 + 0.625 \times 75 + 0.5 \times 100$ $= 173.98mm$ The total effective length for this bolt group combination: $\sum l_{eff,cp} = 221.11 + 221.11 = 442.22mm$ $\sum l_{eff,nc} = 203.59 + 173.98 = 377.56mm$ Effective length for mode 1: $\sum l_{eff,1} = \min\left(\sum l_{eff,cp}\,;\sum l_{eff,nc}\right)$ $= 377.56mm$	

Check 3a – Moment resistance (Tension zone T-stubs)		
Ref	Calculations	Remark
	Effective length for mode 2: $\sum l_{eff,2} = \sum l_{eff,nc} = 377.56mm$ Mode 1 Complete flange yielding resistance: $M_{pl,1,Rd} = \frac{0.25 \sum l_{eff,1}\, t_p^2 f_y}{\gamma_{M0}}$ $= \frac{0.25 \times 377.56 \times 15^2 \times 355}{1.0}$ $= 7539401Nmm$ $n = \min\,(1.25m; e)$ $= \min(48.19; 75)$ $= 48.19mm$ Method 1: $F_{T,1,Rd} = \frac{4M_{pl,1,Rd}}{m}$ $= \frac{4 \times 7539401}{38.55} \times 10^{-3}$ $= 782.30kN$ Method 2: $F_{T,1,Rd} = \frac{(8n - 2e_w)M_{pl,1,Rd}}{2mn - e_w(m+n)}$ $= \frac{(8 \times 48.19 - 2 \times 11) \times 7539401}{2 \times 38.55 \times 48.19 - 11 \times (38.55 + 48.19)} \times 10^{-3}$ $= 992.55kN$	

Check 3a – Moment resistance (Tension zone T-stubs)		
Ref	Calculations	Remark
	Mode 2 Bolt failure with flange yielding resistance: $M_{pl,2,Rd} = \frac{0.25 \sum l_{eff,2}\, t_p^2 f_y}{\gamma_{M0}}$ $= \frac{0.25 \times 377.56 \times 15^2 \times 355}{1.0}$ $= 7539401 Nmm$ $F_{T,2,Rd} = \frac{2M_{pl,2,Rd} + n \sum F_{t,Rd}}{m+n}$ $= \frac{2 \times (7539401 + 48.19 \times 406656)}{38.55 + 48.19} \times 10^{-3}$ $= 625.68 kN$ Mode 3 Bolt failure resistance: $F_{T,3,Rd} = \sum F_{t,Rd} = 4F_{t,Rd}$ $= 4 \times 203328 \times 10^{-3}$ $= 813.31 kN$ Resistance of end plate in bending: $F_{t,ep,Rd} = \min\{F_{T,1,Rd}; F_{T,2,Rd}; F_{T,3,Rd}\}$ $= \min(782.30; 625.68; 813.31\}$ $= 625.68 kN$ **Summary of resistance of bolt rows 1 and 2 combination** Column side: Column flange in bending $F_{t,fc,Rd} = 586.6 kN$ Column web in tension $F_{t,wc,Rd} = 577.1 kN$ The resistance of bolt row 2 on the column side limited to: $F_{t,2,c,Rd} = F_{t,12,Rd} - F_{t,1,Rd}$ $= 577.08 - 317.87$ $= 259.21 kN$	

Check 3a – Moment resistance (Tension zone T-stubs)		
Ref	Calculations	Remark
	Beam side: End plate in bending $F_{t,ep,Rd} = 625.68kN$ The resistance of bolt row 2 on the beam side limited to: $F_{t,2,b,Rd} = F_{t,12,Rd} - F_{t,1,Rd}$ $= 625.68 - 317.87$ $= 307.81kN$ **Summary of resistance of bolt row 2** Column flange in bending $F_{t,fc,Rd} = 317kN$ Column web in tension $F_{t,wc,Rd} = 497kN$ Beam web in tension $F_{t,wb,Rd} = 868kN$ End plate in bending $F_{t,ep,Rd} = 340kN$ Column side limitation $F_{t,2,Rd} = 259kN$ Beam side limitation $F_{t,2,Rd} = 308kN$ ∴The resistance of bolt row 2: $F_{t,2,Rd} = 259.21kN$	

Check 3b – Compression zone		
Ref	Calculations	Remark
	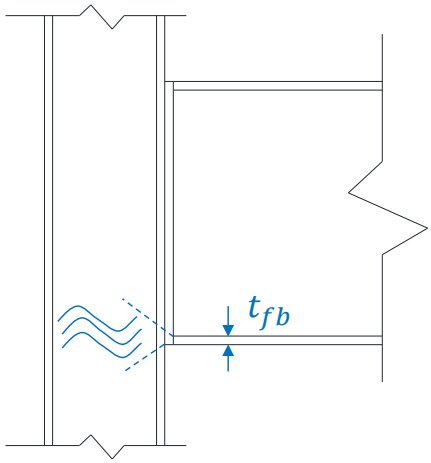 **Column web in transverse compression** As the depth of the end plate is same as the beam, the dispersion of the force may not be same as normal end plate connection with sufficient depth. Effective length of column web: $b_{eff,c,wc} = t_{fb} + s_f + 5(t_{fc} + s) + \frac{s_p}{2}$ $= 15.6 + 12 + 5 \times (14.2 + 10.2) + 15$ $= 164.6mm$ Plate slenderness: $\bar{\lambda}_p = 0.932\sqrt{\frac{b_{eff,c,wc} d_c f_y}{E t_{wc}^2}}$ $= 0.932\sqrt{\frac{164.6 \times 209.6 \times 355}{210000 \times 9.4^2}}$ $= 0.76 > 0.72$ $\rho = \frac{\bar{\lambda}_p - 0.2}{\bar{\lambda}_p^2}$ $= \frac{0.76 - 0.2}{0.76^2}$ $= 0.97$	

Check 3b – Compression zone		
Ref	Calculations	Remark
	As $\beta = 1$, $\omega = \dfrac{1}{\sqrt{1 + 1.3\left(\dfrac{b_{eff,c,wc}t_{wc}}{A_{vc}}\right)^2}}$ $= 0.78$ Design resistance of an unstiffened column web: $F_{c,wc,Rd} = \dfrac{\omega k_{wc}\rho b_{eff,c,wc}t_{wc}f_y}{\gamma_{M1}}$ $= \dfrac{0.78 \times 0.97 \times 164.6 \times 9.4 \times 355}{1.0} \times 10^{-3}$ $= 417.80kN$	$A_{vc} = 2218.44mm^2$ $k_{wc} = 1$
SS EN1993-1-8 6.2.6.7 (1)	**Beam flange and web in compression** Design moment resistance of the beam cross-section (S355 UB457x152x67): $M_{c,Rd} = 838kNm$ $F_{c,fb,Rd} = \dfrac{M_{c,Rd}}{h - t_{fb}}$ $= \dfrac{838}{533.1 - 15.6} \times 10^3$ $= 1619.32kN$ **Column web in shear** The plastic shear resistance of an unstiffened web: $V_{wp,Rd} = \dfrac{0.9f_yA_{vc}}{\sqrt{3}\gamma_{M0}}$ $= \dfrac{0.9 \times 355 \times 2218.44}{\sqrt{3}}$ $= 409.22kN$	$M_{c,Rd}$ is read from SCI_P363 page D-68

Check 3b – Compression zone		
Ref	Calculations	Remark
	∴ The resistance of the compression zone is: $F_{c,Rd} = \min\left(F_{c,wc,Rd}; F_{c,fb,Rd}; V_{wp,Rd}\right)$ $= \min(417.80; 1619.32; 409.22)$ $= 409.22kN$	

Check 3 – Moment resistance		
Ref	Calculations	Remark
SCI_P398 SS EN1993-1-8	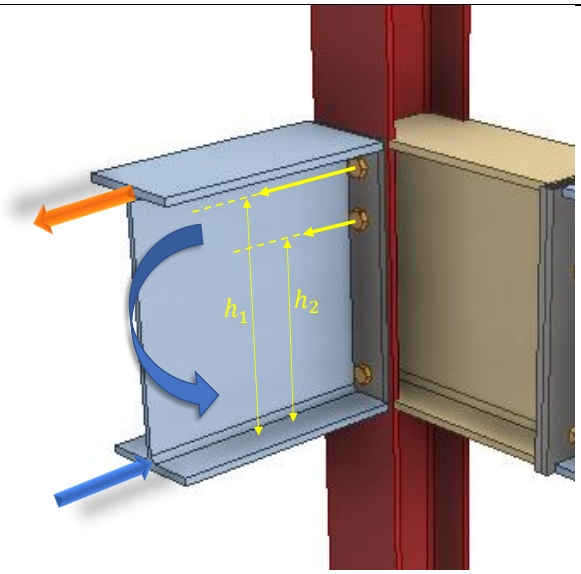 **Effective resistances of bolt rows** The effective resistance of each of the bolt row: $F_{t,1,Rd} = 317.87kN$ $F_{t,2,Rd} = 259.21kN$ According to SS EN1993-1-8 6.2.7.2 (9), the effective resistances of the bolt rows need to be reduced if the resistance of one single row exceed $1.9F_{t,Rd}$ $1.9F_{t,Rd} = 1.9 \times 203.33 = 386.32kN$ Since the effective resistance of tension of the bolt row is within the limit, no reduction is required. UK NA states that no reduction is required if: $t_p \; or \; t_{fc} \leq \frac{d}{1.9}\sqrt{\frac{f_{ub}}{f_y}} = 18.96mm$ In this example, as $t_p = 15mm < 18.96mm$, no reduction is needed. **Equilibrium of forces** Total effective tension resistance: $\sum F_{t,Rd} = F_{t,1,Rd} + F_{t,2,Rd} = 317.87 + 259.21$ $= 577.08kN$	

Check 3 – Moment resistance		
Ref	Calculations	Remark
	Compression resistance: $F_{c,Rd} = 409.22kN < \sum F_{t,Rd}$ ∴ Reduction is needed and can be done by reducing the resistance of bottom row of bolt Hence, $F_{t,2,Rd} = 259.21 - (577.08 - 409.22)$ $= 91.35kN$	
SS EN1993-1-8 6.2.7.2 (1)	**Moment resistance of joint** The moment resistance of the connection may be determined using: $M_{j,Rd} = \sum_r h_r F_{t,r,Rd}$ Taking the center of compression to be at the mid-thickness of the compression flange of the beam: $h_1 = h_b - \left(\frac{t_{fb}}{2}\right) - e_x$ $= 533.1 - \left(\frac{15.6}{2}\right) - 60$ $= 465.3mm$ $h_2 = h_1 - 100 = 365.3mm$ $M_{j,Rd} = h_1 F_{1,r,Rd} + h_2 F_{2,r,Rd}$ $= 465.3 \times 317.87 + 365.3 \times 91.35$ $= 181.28kNm > M_{Ed} = 100kNm$	OK

Check 4 – Vertical shear resistance of bolt group		
Ref	Calculations	Remark
	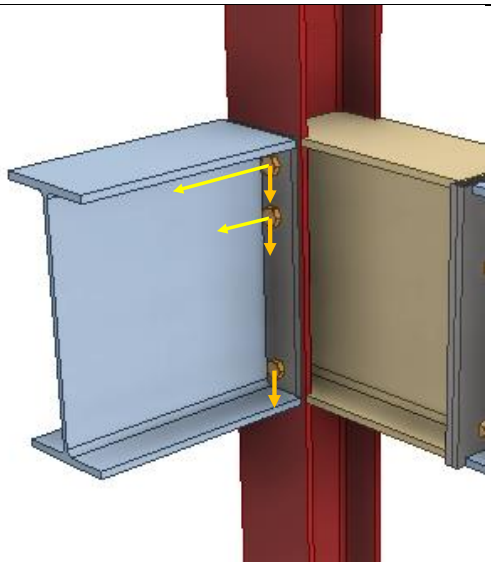	
SCI_P398	For Grade 8.8 M24 bolts: $\alpha_v = 0.6$ $A_s = 353mm^2$ $f_{ub} = 800MPa$ Shear resistance of an individual bolt: $F_{v,Rd} = \frac{\alpha_v f_{ub} A_s}{\gamma_{M2}}$ $= \frac{0.6 \times 800 \times 353}{1.25} \times 10^{-3}$ $= 135.55kN$ Bearing on end plate: $k_1 = \min\left(\frac{2.8e_2}{d_0} - 1.7; 2.5\right)$ $= \min\left(2.8 \times \frac{50}{26} - 1.7; 2.5\right)$ $= 2.5$ $\alpha_b = \min\left(\frac{p_1}{3d_0} - \frac{1}{4}; \frac{e_1}{3d_0}; \frac{f_{ub}}{f_u}; 1.0\right)$ $= \min\left(\frac{100}{3 \times 26} - \frac{1}{4}; \frac{60}{3 \times 26}; \frac{800}{510}; 1.0\right)$ $= 0.77$	

Check 4 – Vertical shear resistance of bolt group		
Ref	Calculations	Remark
	$F_{b,Rd} = \frac{k_1 \alpha_b f_u d t}{\gamma_{M2}}$ $= \frac{2.5 \times 0.77 \times 510 \times 24 \times 15}{1.25}$ $= 282.46kN$ Hence, resistance of an individual bolt: $F_{Rd} = \min(F_{v,Rd}; F_{b,Rd})$ $= \min(135.55; 282.46)$ $= 135.55kN$ According to SCI_P398, the shear resistance of the upper rows may be taken conservatively as 28% of the shear resistance without tension, thus the shear resistance of the bolt group is: $V_{Rd} = (2 + 4 \times 0.28) \times F_{Rd}$ $= 3.12 \times 135.55$ $V_{Rd} = 422.92kN > V_{Ed} = 350kN$	OK

2.4.13 Example 19 – Beam-to-Beam connection (moment-resisting connection) in major axis and/or minor axis (section c)

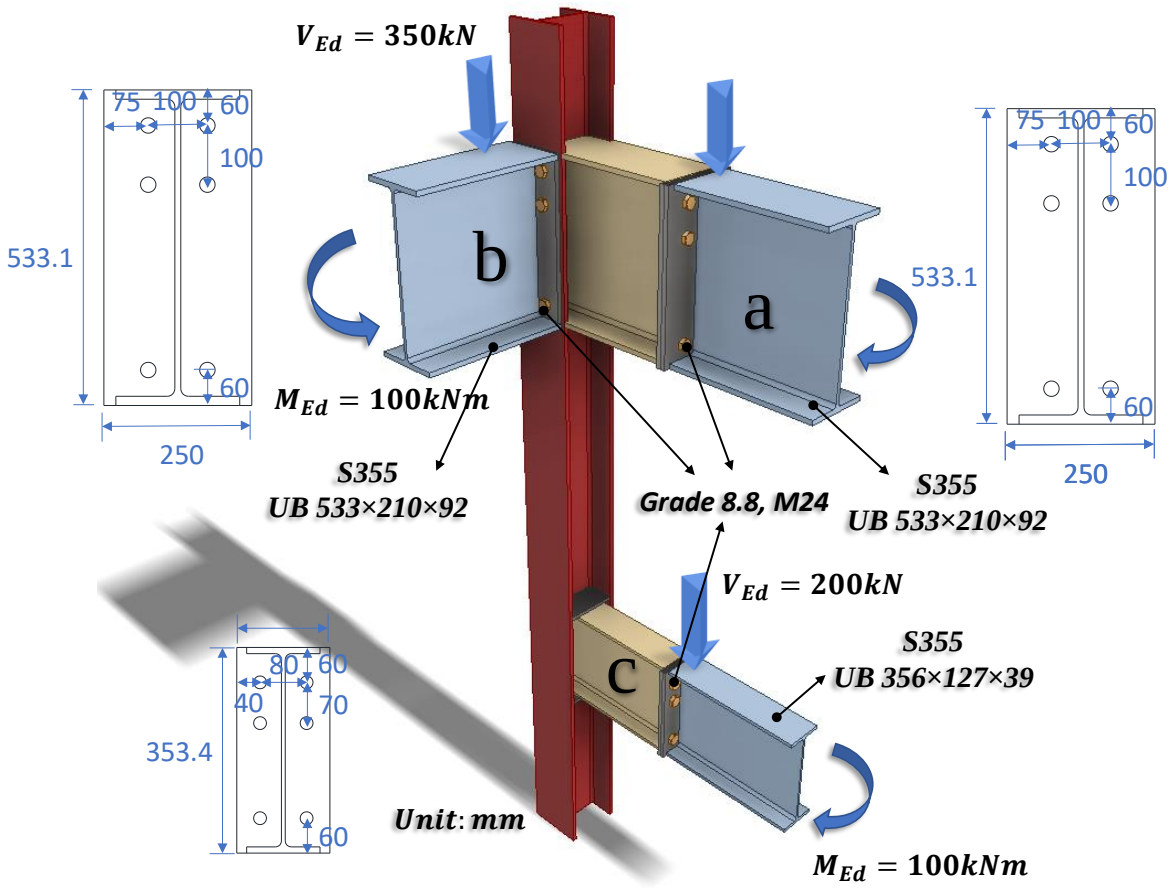

Check 1 – Weld of beam web to end plate		
Ref	Calculations	Remark
	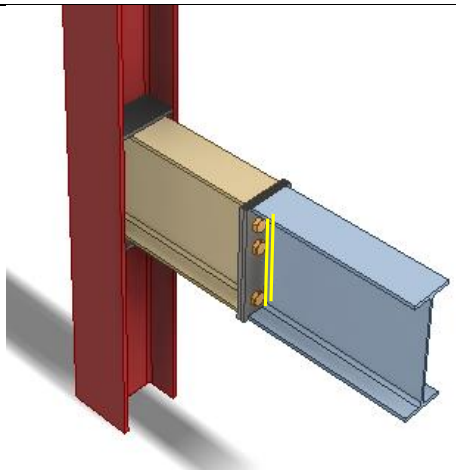	
SS EN1993-1-8 6.2.2 (1)	In welded and bolted connections with end-plates, the welds connecting the beam web should be designed to transfer the shear force from the connected beam to the joint, without any assistance from the welds connecting the beam flanges.	
SS EN1993	Length of fillet weld connecting beam web: $L_w = 2d_b$ $= 2 \times 311.6$ $= 623.2mm$	For UB356x127x39: Depth between fillets: $d_b = 311.6mm$
SCI_P363	Choose fillet weld with 8mm leg length, 5.6mm throat thickness and grade S355: Longitudinal resistance: $F_{w,L,Rd} = 1.35kN/mm$ Transverse resistance: $F_{w,T,Rd} = 1.65kN/mm$ Shear resistance: $V_{Rd} = F_{w,L,Rd}L_w$ $= 1.35 \times 623.2$ $= 841.32kN > V_{Ed} = 200kN$	OK

Check 4 – Resistance of PPBW		
Ref	Calculations	Remark
	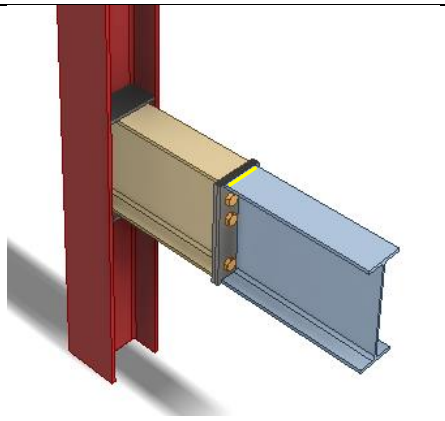	
BS 5950-1 6.9.2	**Partial penetration butt weld resistance:** The minimum throat size of a longitudinal partial penetration butt weld should be $2\sqrt{t}$ (in mm), where t is the thickness of the thinner part of joint.	
SS EN1993-1-1 4.7.2 (1)	The design resistance of a partial penetration butt weld should be determined using the method for a deep penetration fillet weld.	
SCI_P363	In this example, the angle between the transverse force and weld throat $\theta = 90°$. Provided the groove angle is greater than 60° or U-butt is adopted, the throat thickness is equal to the depth of penetration. 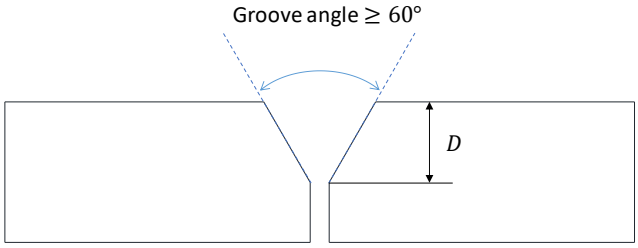 Choose partial butt weld with 8mm ($> 2\sqrt{10.7} = 6.54mm$) throat thickness and grade S355 which match the beam material properties: The design transverse resistance of weld: $F_{w,T,Rd} = \frac{0.9 f_u}{\gamma_{M2}} a$ $= \frac{0.9 \times 470 \times 8}{1.25} \times 10^{-3}$ $= 2.71 kN/mm$	$f_u = 470MPa$ for S355 weld $\gamma_{M2} = 1.25$ For UB356x127x39: $b_b = 126mm$

Check 4 – Resistance of PPBW		
Ref	Calculations	Remark
	The tensile resistance of the weld: $F_{t,Rd} = F_{w,T,Rd} b_b$ $= 2.71 \times 126$ $= 341.11 kN$ Applied tensile force on beam flange: $F_{Ed} = \frac{M_{Ed}}{h_b - t_{fb}}$ $= \frac{100}{353.4 - 10.7} \times 10^3$ $= 291.80 kN < F_{t,Rd} = 341.11 kN$	OK

Check 5 – Welding on stiffener plate		
Ref	Calculations	Remark
SS EN1993	Beam flange tensile resistance: $F_{Rd.flange} = \frac{t_f b_f f_{y,bf}}{\gamma_{M0}}$ $= \frac{10.7 \times 126 \times 355}{1.0} \times 10^{-3}$ $= 478.61kN$ Applied tensile force on beam flange at the connection: $F_{Ed} = \frac{M_{Ed,2}}{h_b - t_{fb}}$ $= \frac{150}{353.4 - 10.7} \times 10^{-3}$ $= 437.70kN < F_{Rd,flange} = 478.61kN$ 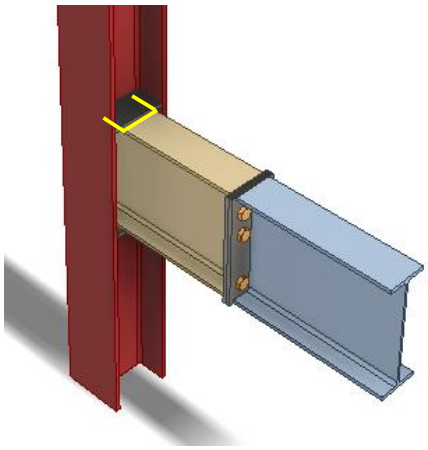 **Fillet weld between beam stub and stiffener plate:** Length of fillet weld parallel to the tensile force: $L_{w,L} = \frac{b_c - t_{wc} - 2 \times r_c}{2}$ $= \frac{205.8 - 9.4 - 2 \times 10.2}{2}$ $= 88mm$	For beam UB356x127x39: $b_b = 126mm$ $h_b = 353.4mm$ $t_{fb} = 10.7mm$ For column UC203x203x60: $h_c = 209.6mm$ Depth between fillets: $d_c = 160.8mm$ $t_{wc} = 9.4mm$ $r_c = 10.2mm$ $b_c = 205.8mm$

Check 5 – Welding on stiffener plate		
Ref	Calculations	Remark
	Length of fillet weld perpendicular to the tensile force: $L_{w,T} = b_b = 126mm$ Choose fillet weld with 8mm leg length, 5.6mm throat thickness and grade S355: Longitudinal resistance: $F_{w,L,Rd} = 1.35kN/mm$ Transverse resistance: $F_{w,T,Rd} = 1.65kN/mm$ Tensile resistance of fillet weld: $F_{Rd} = 2F_{w,L,Rd}L_{w,L} + F_{w,T,Rd}L_{w,T}$ $= 2 \times 1.35 \times 88 + 1.65 \times 126$ $= 491.37kN > F_{Ed} = 437.70kN$ 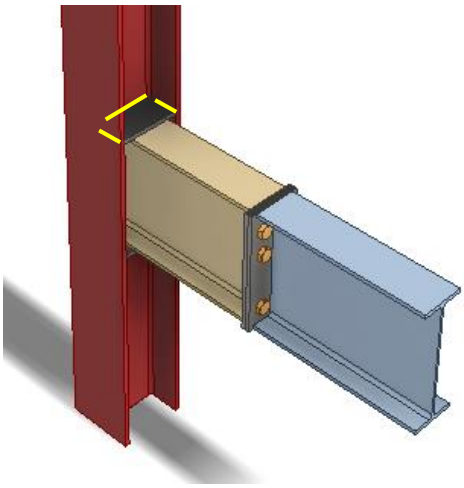 **Fillet weld between stiffener plate and column:** Length of fillet weld parallel to the tensile force: $L_{w,L} = 88mm$ Length of fillet weld perpendicular to the tensile force: $L_{w,T,2} = d_c = 160.8mm$	

Check 5 – Welding on stiffener plate		
Ref	Calculations	Remark
	Choose fillet weld with 8mm leg length, 5.6mm throat thickness and grade S355: Longitudinal resistance: $F_{w,L,Rd} = 1.35kN/mm$ Transverse resistance: $F_{w,T,Rd} = 1.65kN/mm$ Tensile resistance of fillet weld: $F_{Rd} = 2F_{w,L,Rd}L_{w,L} + F_{w,T,Rd}L_{w,T}$ $= 2 \times 1.35 \times 88 + 1.65 \times 160.8$ $= 502.92kN > F_{Ed} = 437.70kN$	

Check 2a – Moment resistance (Tension zone T-stubs)		
Ref	Calculations	Remark
	Bolt spacings: End distance: $e_x = 60mm$ Edge distance: $e = 40mm$ Spacing (gauge): $w = 80mm$ Spacing row 1 – 2: $p_{1-2} = 70mm$ 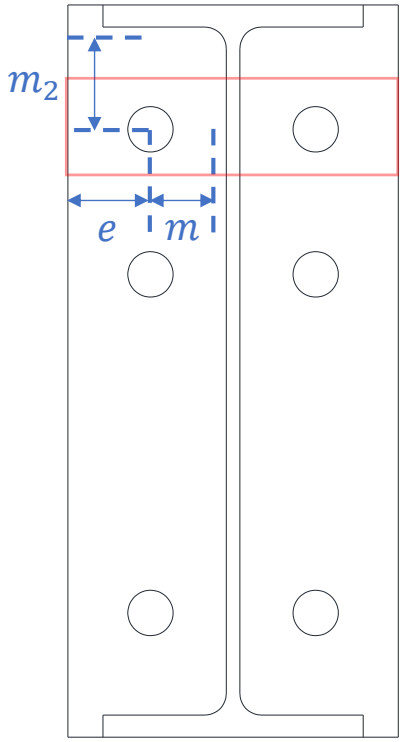 	
SCI_P398 SS EN1993-1-8	**Bolt row 1:** **End plate in bending** $m = m_p = 30.3mm$ $e = 40mm$ $m_2 = e_x - t_{fb} - 0.8s_f$ $= 60 - 10.7 - 0.8 \times 12$ $= 39.7mm$ Based on Figure 6.11 of SS EN1993-1-8: Values of α for stiffened column flanges and end-plates, $\alpha = 5.9$	$m_p = (w - t_{wb} - 2 \times 0.8s_w)/2$ $= (80 - 6.6 - 2 \times 0.8 \times 8)/2$ $= 30.3mm$ $\lambda_1 = \frac{m}{m + e}$ $= \frac{30.3}{30.3 + 40}$ $= 0.43$

Check 2a – Moment resistance (Tension zone T-stubs)		
Ref	Calculations	Remark
	For pair of bolts in a column flange below a stiffener (or cap plate) or in an end plate below the beam flange: The **circular patterns** effective length for: Circular yielding: $l_{eff,cp} = 2\pi m = 2\pi \times 30.3 = 190.38mm$ The **non-circular patterns** effective length for: Side yielding near beam flange or a stiffener: $l_{eff,nc} = \alpha m = 5.9 \times 30.3 = 178.77mm$ Effective length for mode 1: $l_{eff,1} = \min(l_{eff,cp}; l_{eff,nc}) = 178.77mm$ Effective length for mode 2: $l_{eff,2} = l_{eff,nc} = 178.77mm$	$\lambda_2 = \frac{m_2}{m+e}$ $= \frac{39.7}{30.3+40}$ $= 0.56$
SCI_P398 SS EN1993-1-8	Mode 1 Complete flange yielding resistance: $M_{pl,1,Rd} = \frac{0.25 \sum l_{eff,1}\, t_p^2 f_y}{\gamma_{M0}}$ $= \frac{0.25 \times 178.77 \times 15^2 \times 355}{1.0}$ $= 3569813Nmm$ $n = \min\,(1.25m; e)$ $= \min(37.88; 40)$ $= 37.88mm$ Method 1: $F_{T,1,Rd} = \frac{4M_{pl,1,Rd}}{m}$ $= \frac{4 \times 3569813}{30.3} \times 10^{-3}$ $= 471.26kN$	$t_p = 15mm$ As $t_p < 16mm$, $f_y = 355MPa$ Grade 8.8 M20 bolts are used: Diameter of washer: $d_w = 37mm$ $e_w = \frac{d_w}{4} = 9.25mm$

Check 2a – Moment resistance (Tension zone T-stubs)		
Ref	Calculations	Remark
	Method 2: $F_{T,1,Rd} = \frac{(8n - 2e_w)M_{pl,1,Rd}}{2mn - e_w(m+n)}$ $= \frac{(8 \times 37.88 - 2 \times 9.25) \times 3569813}{2 \times 30.3 \times 37.88 - 9.25 \times (30.3 + 37.88)} \times 10^{-3}$ $= 610.12kN$ Mode 2 Bolt failure with flange yielding resistance: $M_{pl,2,Rd} = \frac{0.25 \sum l_{eff,2}\, t_p^2 f_y}{\gamma_{M0}}$ $= \frac{0.25 \times 178.77 \times 15^2 \times 355}{1.0}$ $= 3569813Nmm$ $F_{t,Rd} = \frac{k_2 f_{ub} A_s}{\gamma_{M2}}$ $= \frac{0.9 \times 800 \times 245}{1.25}$ $= 141120N$ $\sum F_{t,Rd} = 2 \times F_{t,Rd} = 2 \times 141120$ $= 282240N$ $F_{T,2,Rd} = \frac{2M_{pl,2,Rd} + n \sum F_{t,Rd}}{m+n}$ $= \frac{2 \times 3569813 + 37.88 \times 282240}{30.3 + 37.88} \times 10^{-3}$ $= 261.53kN$	For Grade 8.8 M20 bolts: $k_2 = 0.9$ Ultimate strength: $f_{ub} = 800MPa$ Shear area: $A_s = 245mm^2$

Check 2a – Moment resistance (Tension zone T-stubs)		
Ref	Calculations	Remark
	Mode 3 Bolt failure resistance: $F_{T,3,Rd} = \sum F_{t,Rd} = 2F_{t,Rd}$ $= 2 \times 141120 \times 10^{-3}$ $= 282.24kN$ Resistance of end plate in bending: $F_{t,ep,Rd} = \min\{F_{T,1,Rd}; F_{T,2,Rd}; F_{T,3,Rd}\}$ $= \min(471.26; 261.53; 282.24\}$ $= 261.53kN$	
SS EN1993-1-8 6.2.6.8 (1)	**Beam web in tension** $F_{t,wb,Rd} = \frac{b_{eff,t,wc} t_{wb} f_{y,b}}{\gamma_{M0}}$ $= \frac{178.77 \times 6.6 \times 355}{1.0} \times 10^{-3}$ $= 418.86kN$ 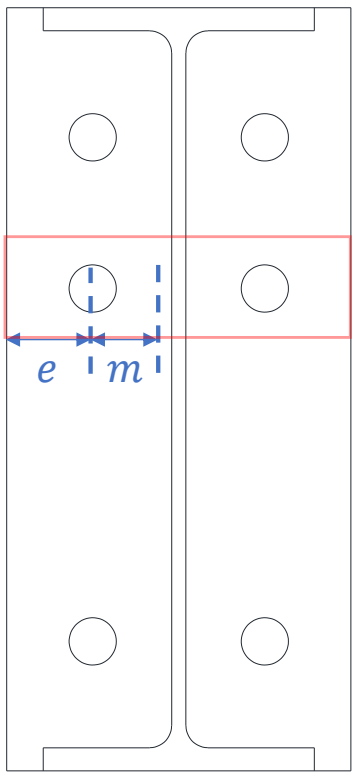 	$b_{eff,c,wc} = l_{eff}$ $= 178.77mm$ *Conservatively, consider the smallest l_{eff} (6.2.6.8 (2)) For UB 457x152x67: $t_{wb} = 6.6mm$

Check 2a – Moment resistance (Tension zone T-stubs)		
Ref	Calculations	Remark
SCI_P398 SS EN1993-1-8	**Bolt row 2:** **End plate in bending** For pair of bolts in a column flange away from any stiffener or in an end plate, away from the flange or any stiffener: The circular patterns effective length for: Circular yielding: $l_{eff,cp} = 2\pi m = 2\pi \times 30.3 = 190.38mm$ The non-circular patterns effective length for: Side yielding: $l_{eff,nc} = 4m + 1.25e = 4 \times 30.3 + 1.25 \times 40$ $= 171.2mm$ Effective length for mode 1: $l_{eff,1} = \min(l_{eff,cp}; l_{eff,nc}) = 171.2mm$ Effective length for mode 2: $l_{eff,2} = l_{eff,nc} = 171.2mm$ Mode 1 Complete flange yielding resistance: $M_{pl,1,Rd} = \frac{0.25 \sum l_{eff,1}\, t_p^2 f_y}{\gamma_{M0}}$ $= \frac{0.25 \times 171.2 \times 15^2 \times 355}{1.0}$ $= 3418650Nmm$ $n = \min\,(1.25m; e)$ $= \min(37.88; 40)$ $= 37.88mm$	

Check 2a – Moment resistance (Tension zone T-stubs)		
Ref	Calculations	Remark
	Method 1: $F_{T,1,Rd} = \frac{4M_{pl,1,Rd}}{m}$ $= \frac{4 \times 3418650}{30.3} \times 10^{-3}$ $= 451.31kN$ Method 2: $F_{T,1,Rd} = \frac{(8n - 2e_w)M_{pl,1,Rd}}{2mn - e_w(m+n)}$ $= \frac{(8 \times 37.88 - 2 \times 9.25) \times 3418650}{2 \times 30.3 \times 37.88 - 9.25 \times (30.3 + 37.88)} \times 10^{-3}$ $= 584.29kN$ Mode 2 Bolt failure with flange yielding resistance: $M_{pl,2,Rd} = \frac{0.25 \sum l_{eff,2}\, t_p^2 f_y}{\gamma_{M0}}$ $= \frac{0.25 \times 171.2 \times 15^2 \times 355}{1.0}$ $= 3418650Nmm$ $F_{T,2,Rd} = \frac{2M_{pl,2,Rd} + n \sum F_{t,Rd}}{m+n}$ $= \frac{2 \times 3418650 + 37.88 \times 282240}{30.3 + 37.88} \times 10^{-3}$ $= 257.09kN$ Mode 3 Bolt failure resistance: $F_{T,3,Rd} = \sum F_{t,Rd} = 2F_{t,Rd}$ $= 2 \times 141120 \times 10^{-3}$ $= 282.24kN$	

Check 2a – Moment resistance (Tension zone T-stubs)		
Ref	Calculations	Remark
	Resistance of end plate in bending: $F_{t,ep,Rd} = \min\{F_{T,1,Rd}; F_{T,2,Rd}; F_{T,3,Rd}\}$ $= \min(451.31; 257.09; 282.24\}$ $= 257.09kN$	
SS EN1993-1-8 6.2.6.8 (1)	**Beam web in tension** $F_{t,wb,Rd} = \frac{b_{eff,t,wc} t_{wb} f_{y,b}}{\gamma_{M0}}$ $= \frac{171.2 \times 6.6 \times 355}{1.0} \times 10^{-3}$ $= 401.12kN$ 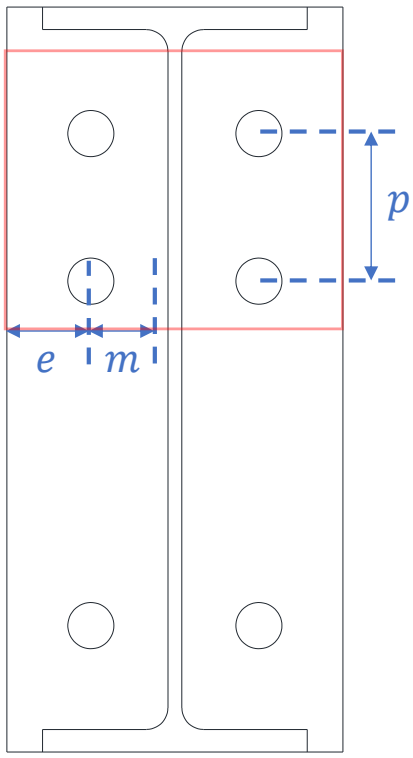 **Bolt row 1 & 2 combined:** **End plate in bending** For bolt row 2, the resistance of it may be limited by the resistance of rows 1 & 2 as a group.	$b_{eff,c,wc} = l_{eff}$ $= 171.2mm$

Check 2a – Moment resistance (Tension zone T-stubs)		
Ref	Calculations	Remark
SS EN1993-1-8 6.2.6.5 Table 6.6	Row 1 is classified as "First bolt-row below tension flange of beam" with effective length: Circular patterns: $l_{eff,cp} = \pi m + p = \pi \times 30.3 + 70$ $= 165.19mm$ Non-circular patterns: $l_{eff,nc} = 0.5p + \alpha m - (2m + 0.625e)$ $= 0.5 \times 70 + 5.9 \times 30.3 - (2 \times 30.3 + 0.625 \times 40)$ $= 128.17mm$ Row 2 is classified as "Other end bolt-row" with effective length: Circular patterns: $l_{eff,cp} = \pi m + p = \pi \times 30.3 + 70$ $= 165.19mm$ Non-circular patterns: $l_{eff,nc} = 2m + 0.625e + 0.5p$ $= 2 \times 30.3 + 0.625 \times 40 + 0.5 \times 70$ $= 120.60mm$ The total effective length for this bolt group combination: $\sum l_{eff,cp} = 165.19 + 165.19 = 330.38mm$ $\sum l_{eff,nc} = 128.17 + 120.60 = 248.77mm$ Effective length for mode 1: $\sum l_{eff,1} = \min\left(\sum l_{eff,cp}; \sum l_{eff,nc}\right)$ $= 248.77mm$ Effective length for mode 2: $\sum l_{eff,2} = \sum l_{eff,nc} = 248.77mm$	

Check 2a – Moment resistance (Tension zone T-stubs)		
Ref	Calculations	Remark
	Mode 1 Complete flange yielding resistance: $M_{pl,1,Rd} = \frac{0.25 \sum l_{eff,1}\, t_p^2 f_y}{\gamma_{M0}}$ $= \frac{0.25 \times 248.77 \times 15^2 \times 355}{1.0}$ $= 4967626 Nmm$ $n = \min\,(1.25m; e)$ $= \min(37.88; 40)$ $= 37.88mm$ Method 1: $F_{T,1,Rd} = \frac{4M_{pl,1,Rd}}{m}$ $= \frac{4 \times 4967626}{30.3} \times 10^{-3}$ $= 655.79kN$ Method 2: $F_{T,1,Rd} = \frac{(8n - 2e_w)M_{pl,1,Rd}}{2mn - e_w(m+n)}$ $= \frac{(8 \times 37.88 - 2 \times 9.25) \times 4967626}{2 \times 30.3 \times 37.88 - 9.25 \times (30.3 + 37.88)} \times 10^{-3}$ $= 849.02kN$ Mode 2 Bolt failure with flange yielding resistance: $M_{pl,2,Rd} = \frac{0.25 \sum l_{eff,2}\, t_p^2 f_y}{\gamma_{M0}}$ $= \frac{0.25 \times 248.77 \times 15^2 \times 355}{1.0}$ $= 4967626 Nmm$	

Check 2a – Moment resistance (Tension zone T-stubs)		
Ref	Calculations	Remark
	$F_{T,2,Rd} = \frac{2M_{pl,2,Rd} + n\sum F_{t,Rd}}{m+n}$ $= \frac{2 \times (4967626 + 37.88 \times 282240)}{30.3 + 37.88} \times 10^{-3}$ $= 459.33kN$ Mode 3 Bolt failure resistance: $F_{T,3,Rd} = \sum F_{t,Rd} = 4F_{t,Rd}$ $= 4 \times 141120 \times 10^{-3}$ $= 564.48kN$ Resistance of end plate in bending: $F_{t,ep,Rd} = \min\{F_{T,1,Rd}; F_{T,2,Rd}; F_{T,3,Rd}\}$ $= \min(655.79; 459.33; 564.48\}$ $= 459.33kN$ **Summary of tension resistance of T-stubs:** **Row** / **Resistance** / **Effective Resistance** Row 1 alone / 261.53kN / 261.53kN Row 2 alone / 257.09kN / 197.81kN Row 1 and 2 / 459.33kN / -	

Check 2b – Moment resistance (Compression zone)		
Ref	Calculations	Remark
SS EN1993-1-8 6.2.6.7 (1)	Design moment resistance of the beam cross-section (S355 UB533x210x92): $M_{c,Rd} = 234kNm$ $F_{c,fb,Rd} = \frac{M_{c,Rd}}{h - t_{fb}}$ $= \frac{234}{353.4 - 10.7} \times 10^{3}$ $= 682.81kN$	$M_{c,Rd}$ is read from SCI_P363 page D-70 For UB356x127x39: $h_b = 353.4mm$ $t_{fb} = 10.7mm$

Check 2 – Moment resistance		
Ref	Calculations	Remark
	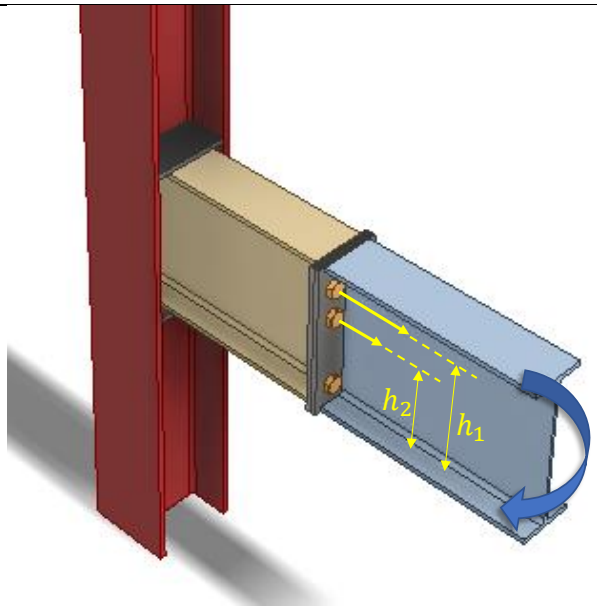	
SS EN1993-1-8 6.2.7.2 (9)	The effective resistances of bolt rows need to be reduced when the bolt row resistance is greater than $1.9F_{t,Rd}$ $1.9F_{t,Rd} = 1.9 \times 141.12 = 268.13kN$ As all bolt row resistances are lesser than 268.13kN, no reduction is required. **Equilibrium of forces** Total effective tension resistance: $\sum F_{t,Rd} = 261.53 + 197.81$ $= 459.33kN < F_{c,fb,Rd} = 682.81kN$ Hence, no reduction is required for the tensile resistance.	
SS EN1993-1-8 6.2.7.2 (1)	The moment resistance of the connection may be determined using: $M_{j,Rd} = \sum_r h_r F_{t,r,Rd}$ Taking the center of compression to be at the mid-thickness of the compression flange of the beam:	

Check 2 – Moment resistance		
Ref	Calculations	Remark
	$h_1 = h_b - \left(\frac{t_{fb}}{2}\right) - e_x$ $= 353.4 - \left(\frac{10.7}{2}\right) - 60$ $= 288.05mm$ $h_2 = h_1 - 70 = 218.05mm$ $M_{j,Rd} = h_1 F_{1,r,Rd} + h_2 F_{2,r,Rd}$ $= (288.05 \times 261.53 + 218.05 \times 197.81) \times 10^{-3}$ $= 118.46kNm > M_{Ed} = 100kNm$	OK

Check 3 – Shear resistance of bolt group		
Ref	Calculations	Remark
	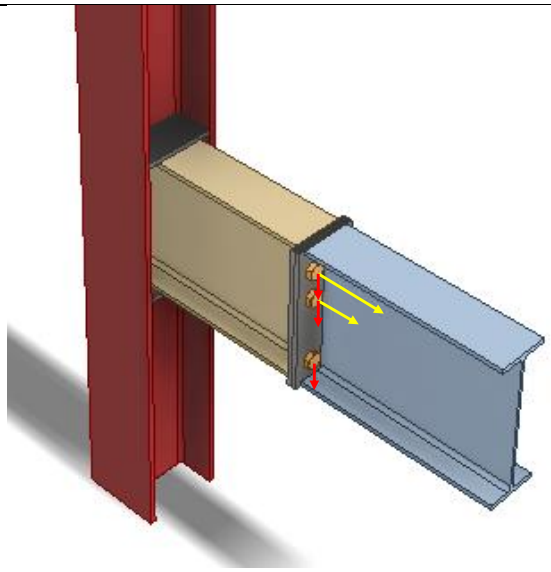	
SCI_P398	For Grade 8.8 M20 bolts: $\alpha_v = 0.6$ $A_s = 245mm^2$ $f_{ub} = 800MPa$ Shear resistance of an individual bolt: $F_{v,Rd} = \frac{\alpha_v f_{ub} A_s}{\gamma_{M2}}$ $= \frac{0.6 \times 800 \times 245}{1.25} \times 10^{-3}$ $= 94.08kN$ $k_1 = \min\left(\frac{2.8e_2}{d_0} - 1.7; 2.5\right)$ $= \min\left(2.8 \times \frac{40}{22} - 1.7; 2.5\right)$ $= 2.5$ $\alpha_b = \min\left(\frac{p_1}{3d_0} - \frac{1}{4}; \frac{e_1}{3d_0}; \frac{f_{ub}}{f_u}; 1.0\right)$ $= \min\left(\frac{70}{3 \times 22} - \frac{1}{4}; \frac{60}{3 \times 22}; \frac{800}{510}; 1.0\right)$ $= 0.81$	

Check 3 – Shear resistance of bolt group		
Ref	Calculations	Remark
	Bearing resistance of an individual bolt: $F_{b,Rd} = \frac{k_1 \alpha_b f_u d t}{\gamma_{M2}}$ $= \frac{2.5 \times 0.81 \times 510 \times 20 \times 15}{1.25}$ $= 248.05kN$ Hence, resistance of an individual bolt: $F_{Rd} = \min(F_{v,Rd}; F_{b,Rd})$ $= \min(94.08; 248.05)$ $= 94.08kN$ According to SCI_P398, the shear resistance of the upper rows may be taken conservatively as 28% of the shear resistance without tension, thus the shear resistance of the bolt group is: $V_{Rd} = (2 + 4 \times 0.28) \times F_{Rd}$ $= 3.12 \times 94.08$ $V_{Rd} = 293.53kN > V_{Ed} = 200kN$	OK

2.5 Strengthening of the joints

The use of stiffener/backing plates may be required when the beam or column capacity is insufficient. Commonly used method of strengthening the joints are as follows.

- Horizontal stiffeners (full/partial depth) may be needed for web in tension/compression and flanges in flexure.
- Web plate for web in tension/compression or shear.
- Shear web stiffener (N, Morris, K stiffener).
- Flange backing plates to increase the column flange flexural resistance.

In this guide, stiffening extended fin plate and strengthening column web with supplementary web plate are considered. For extended fin plate, as the applied load is far away from the weld support, the fin plate is classified as long fin plate in most of the times. Fin plate may be classified as short or long as follows:

Short, $t_p/z_p \geq 0.15$; Long, $t_p/z_p < 0.15$;

z_p: distance between face of the support and first line of bolts

The performance of a long fin plate is affected by lateral torsional buckling and bending. In order to improve the performance of a long fin plate, stiffener plates may be used to prevent lateral torsion buckling of the plate and shorten the distance between the bolt line and support. The bending capacity of the combined section and weld resistance connecting the stiffener plate are checked against moment induced by eccentricity.

For column web with insufficient resistance, supplementary web plates (SWPs) may be used to increase the capacity. The SWP needs to meet the following requirements:

- The steel grade of SWP should be same as that of column web
- The thickness of SWP should be at least that of column web
- The width of SWP should extend to the fillets of the column
- The maximum width of SWP is $40\varepsilon t_s$
- The depth of SWP should extend over at least the effective lengths of the column web
- The perimeter fillet welds should be designed for forces transferred to the SWP and have leg length equal to the thickness of the SWP
- For SWP to supplement tension or compression resistance, the longitudinal welds should be infill weld

To increase the tension and compression resistance of the web panel, adding one plate on one side will increase the effective thickness by 50% while adding two plates on both sides will increase it by 100%. The increased tension and compression resistance should be calculated using the increased effective thickness and the calculation of the reduction factor may be based on the increased shear area.

For shear resistance, adding SWP will increase the shear area of the column web by $b_s t_{wc}$. Only one supplementary plate will contribute to the shear resistance, plates on both sides do not provide any greater increase.

2.5.1 Example 20 – Stiffened extended fin-plates for secondary beams

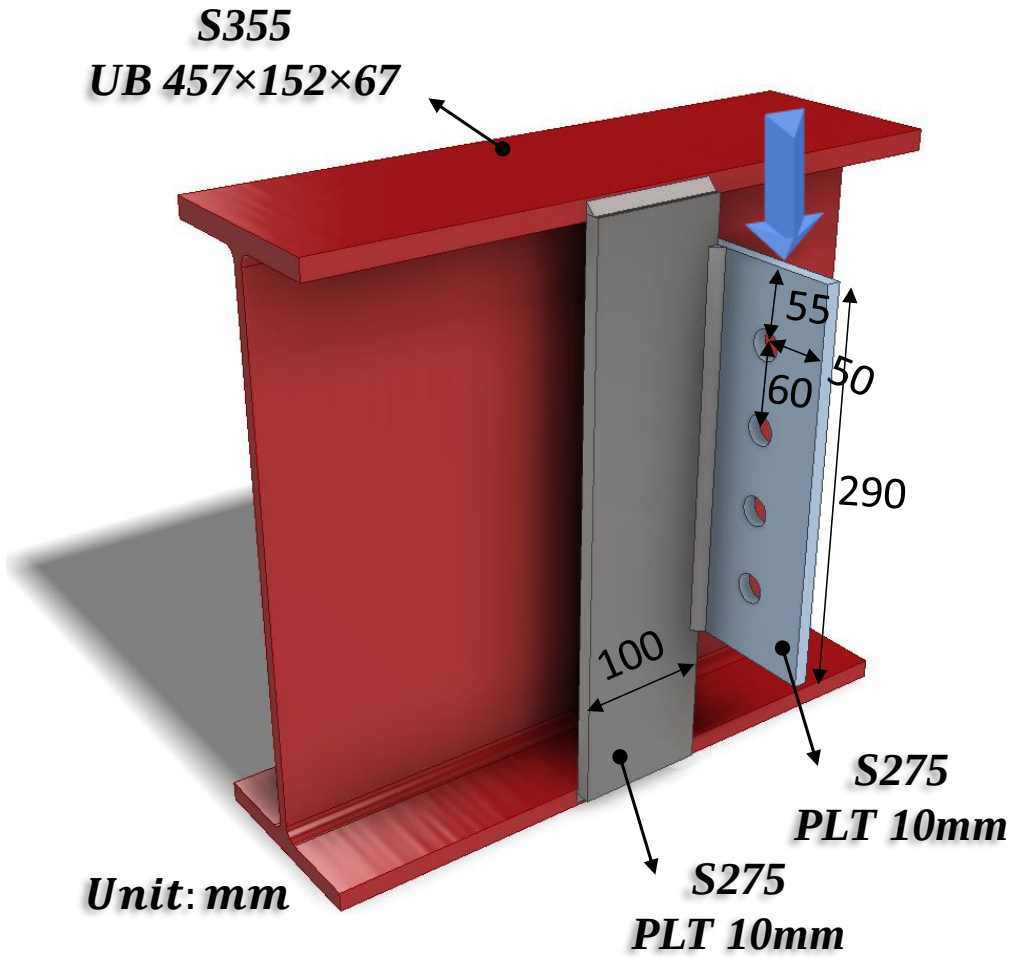

Check 1 – Fin plate classification		
Ref	Calculations	Remark
SCI_P358	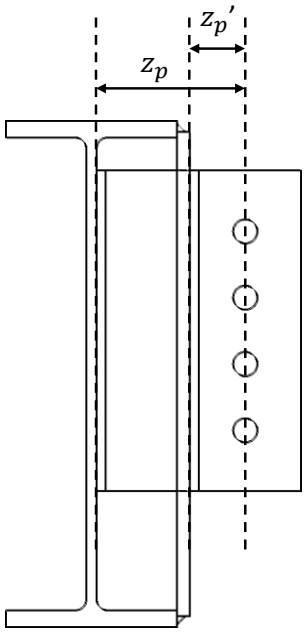 Without the stiffen plate: Distance between bolt line and support: $z_p = 137.4mm$ $\frac{t_p}{z_p} = \frac{10}{137.4} = 0.07 < 0.15$ ∴ The fin plate is classified as **Long fin plate**. For long fin plate, lateral torsional buckling check for fin plate and shear and moment interaction check for beam web need to be performed and the resistance of the connection will be affected. In order to provide lateral restraint to the Long fin plate, stiffen plate is welded to fin plate to reduce the distance between the support and bolt line. Distance between the bolt line and support after stiffen plate is used: $z_p = 50mm$ $\frac{t_p}{z_p} = \frac{10}{50} = 0.20 > 0.15$ ∴ The fin plate becomes **Short fin plate**.	

Check 1 – Fin plate classification		
Ref	Calculations	Remark
	For short fin plate, lateral torsional buckling check for fin plate and shear and moment interaction check for beam web are NOT necessary. Shortening distance z_p will increase the capacity of the connection.	

Check 2 – Nominal moment check		
Ref	Calculations	Remark
	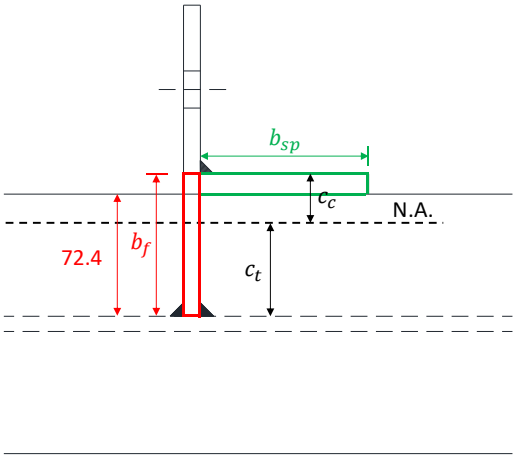 Assume the moment is taken by the L section formed by both fin plate and stiffen plate: Area of fin plate part: $A_{fp} = b_f t_{fp}$ $= (72.4 + 12) \times 10$ $= 844mm^2$ Area of stiffen plate part: $A_{sp} = b_{sp} t_{sp}$ $= 100 \times 12$ $= 1200mm^2$ Location of neutral axis: $c_c = \frac{\left[A_{fp}\left(\frac{b_f}{2}\right) + A_{sp}\left(\frac{t_{sp}}{2}\right)\right]}{A_{fp} + A_{sp}}$ $= \frac{[844 \times 42.2 + 1200 \times 6]}{844 + 1200}$ $= 20.95mm$	Stiffen plate: $b_{sp} = 100mm$ $t_{sp} = 12mm$ Fin plate: $b_f = (72.4 + t_{sp})$ $= 84.4mm$ $t_{fp} = 10mm$

Check 2 – Nominal moment check		
Ref	Calculations	Remark
	Moment of inertia: $I = \frac{b_{sp}t_{sp}^3}{12} + A_{sp}\left(c_c - \frac{t_{sp}}{2}\right)^2 + \frac{t_{fp}b_f^3}{12}$ $+A_{fp}\left(\frac{b_f}{2} - c_c\right)^2$ $= \frac{100 \times 12^3}{12} + 1200 \times \left(20.95 - \frac{12}{2}\right)^2$ $+\frac{10 \times 84.4^3}{12} + 844 \times \left(\frac{84.4}{2} - 20.95\right)^2$ $= 1164731mm^4$ $c = b_f - c_c$ $= 84.4 - 20.95$ $= 63.45mm$ Yield moment: $M_{el} = \frac{f_y I}{c} = \frac{275 \times 1164731}{63.45} \times 10^{-6}$ $= 5.05kNm$ 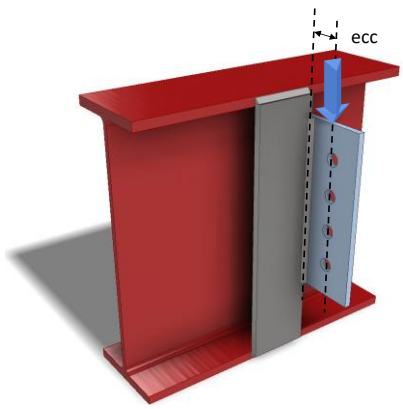 Nominal moment: $M_{Ed} = V_{Ed}z_p$ $= 100 \times 50 \times 10^{-3}$ $= 5kNm < M_{el} = 5.05kNm$ ∴ The fin plate and stiffen plate will not yield under nominal moment	After adding stiffen plate: $z_p = 50mm$

Check 2 – Nominal moment check		
Ref	Calculations	Remark
	Plastic section modular: $W_{pl} = \int zdA$ $= \left(\frac{84.4}{2} - 20.95\right) \times 844 + \left(20.95 - \frac{12}{2}\right) \times 1200$ $= 35874mm^3$ $M_{pl} = f_y W_{pl}$ $= 275 \times 35875 \times 10^{-3}$ $= 9.87kNm > M_{Ed} = 5kNm$	OK

Check 3 – Weld resistance		
Ref	Calculations	Remark
	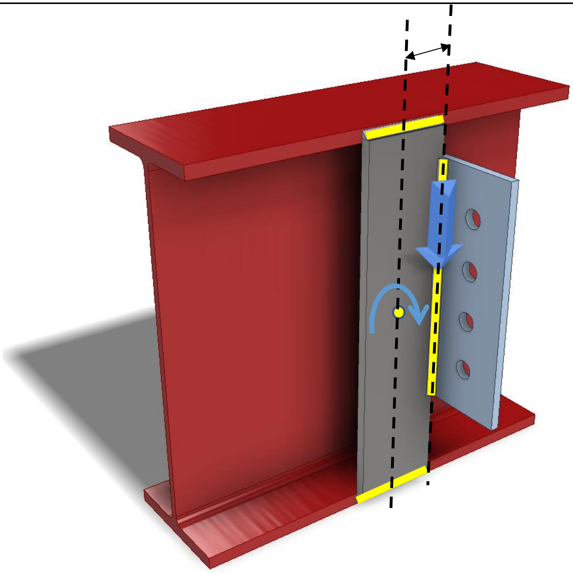	
SS EN1993-1-8	Fillet weld connecting stiffen plate and fin plate: Weld length: $L_{w,1} = d_p = 290mm$ Applied longitudinal stress: $\tau_L = \frac{V_{Ed}}{L_{w,1}} = \frac{100}{290} = 0.35kN/mm$ Choose fillet weld with 8mm leg length, 5.6mm throat thickness and grade S275: Longitudinal resistance: $F_{w,L,Rd} = 1.25kN/mm$ Transverse resistance: $F_{w,T,Rd} = 1.53kN/mm$ $\tau_L = 0.35kN/mm < F_{w,L,Rd} = 1.25kN/mm$ Fillet weld connecting stiffen plate and primary beam: Weld length: $L_{w,2} = b_{sp} = 100mm$ Vertical applied stress: $\tau_v = \frac{V_{Ed}}{2L_{w,2}} = \frac{100}{2 \times 100} = 0.5kN/mm$	Depth of fin plate: $d_p = 290mm$ OK

Check 3 – Weld resistance		
Ref	Calculations	Remark
	Longitudinal applied stress: $\tau_T = \frac{V_{Ed} b_{sp}}{2 d_{sp} L_{w,2}} = \frac{100 \times 100}{2 \times 446 \times 100}$ $= 0.112 kN/mm$ Resultant stress: $\tau_r = \sqrt{\tau_v^2 + \tau_T^2}$ $= \sqrt{0.5^2 + 0.112^2}$ $= 0.512 kN/mm$ Choose fillet weld with 8mm leg length, 5.6mm throat thickness and grade S275: Longitudinal resistance: $F_{w,L,Rd} = 1.25 kN/mm$ Transverse resistance: $F_{w,T,Rd} = 1.53 kN/mm$ **Simplified method:** $F_{w,L,Rd} = 1.25 kN/mm > \tau_r = 0.512 kN/mm$	OK
	Directional method: $SF = \left(\frac{\tau_v}{F_{w,L,Rd}}\right)^2 + \left(\frac{\tau_L}{F_{w,T,Rd}}\right)^2$ $= \left(\frac{0.112}{1.25}\right)^2 + \left(\frac{0.5}{1.53}\right)^2$ $= 0.115 < 1$	OK

Note:

Fillet weld between stiffener plate and primary beam at the internal side is not feasible.

2.5.2 Example 21 – Stiffened extended fin-plates connecting to column in the minor axis (Section a)

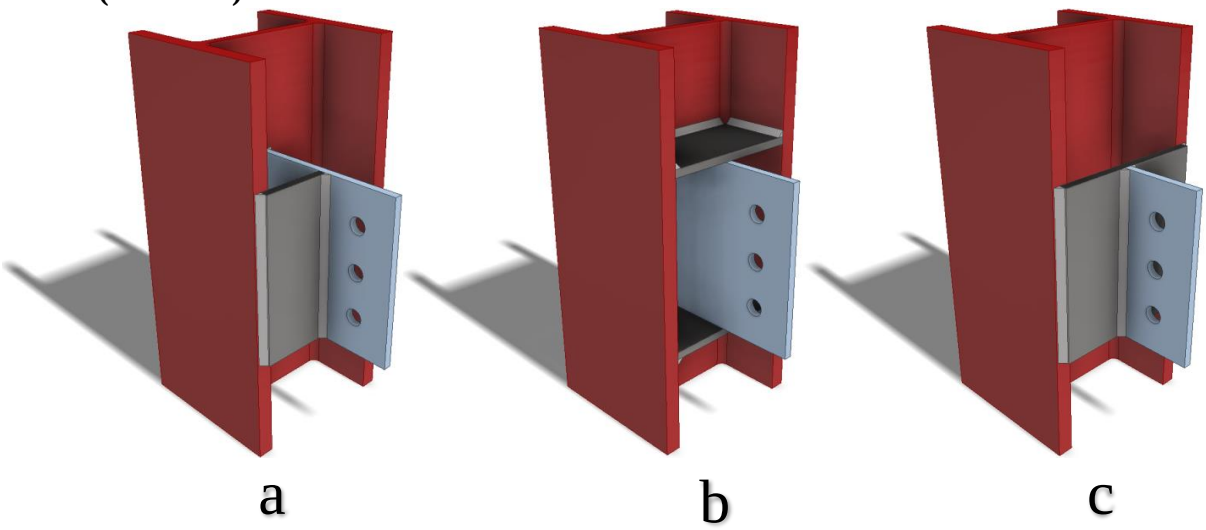

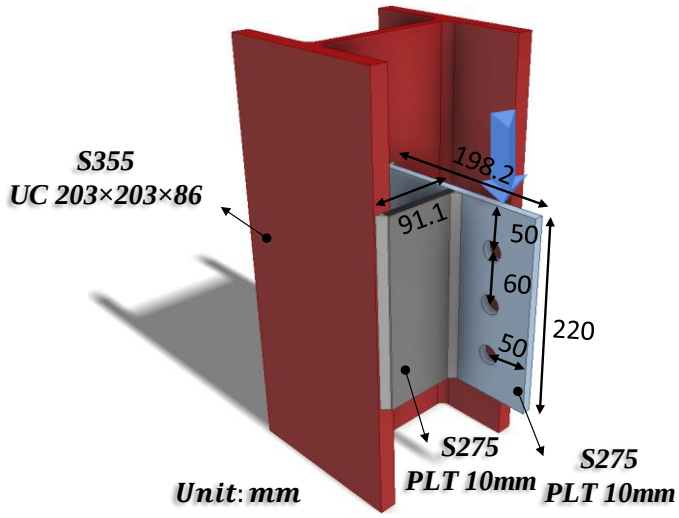

Check 1 – Fin plate classification		
Ref	Calculations	Remark
SCI_P358	Without the stiffen plate: Distance between bolt line and support: $z_p = 148.2mm$ $\frac{t_p}{z_p} = \frac{10}{148.2} = 0.067 < 0.15$ ∴ The fin plate is classified as **Long fin plate**. For long fin plate, lateral torsional buckling check for fin plate and shear and moment interaction check for beam web need to be performed and the resistance of the connection will be affected. In order to provide lateral restraint to the Long fin plate, stiffen plate is welded to fin plate to reduce the distance between the support and bolt line. Distance between the bolt line and support after stiffen plate is used: $z_p = 50mm$ $\frac{t_p}{z_p} = \frac{10}{50} = 0.20 > 0.15$ ∴ The fin plate becomes **Short fin plate**. For short fin plate, lateral torsional buckling check for fin plate and shear and moment interaction check for beam web are NOT necessary. Shortening distance z_p will increase the capacity of the connection.	

Check 2 – Nominal moment check		
Ref	Calculations	Remark
	Assume the moment is taken by the L section formed by both fin plate and stiffen plate: Area of fin plate part: $A_{fp} = b_f t_{fp}$ $= (98.2 + 10) \times 10$ $= 1082mm^2$ Area of stiffen plate part: $A_{sp} = b_{sp} t_{sp}$ $= 91.1 \times 10$ $= 911mm^2$ Location of neutral axis: $c_c = \frac{\left[A_{fp}\left(\frac{b_f}{2}\right) + A_{sp}\left(\frac{t_{sp}}{2}\right)\right]}{A_{fp} + A_{sp}}$ $= \frac{[1082 \times 54.1 + 911 \times 5]}{1082 + 911}$ $= 31.66mm$ Moment of inertia: $I = \frac{b_{sp} t_{sp}^3}{12} + A_{sp}\left(c_c - \frac{t_{sp}}{2}\right)^2 + \frac{t_{fp} b_f^3}{12}$ $+A_{fp}\left(\frac{b_f}{2} - c_c\right)^2$ $= \frac{91.1 \times 10^3}{12} + 911 \times \left(31.66 - \frac{10}{2}\right)^2$ $+ \frac{10 \times 108.2^3}{12} + 1082 \times \left(\frac{108.2}{2} - 31.66\right)^2$ $= 1666165mm^4$ $c = b_f - c_c$ $= 108.2 - 31.66$ $= 50.74mm$	Stiffen plate: $b_{sp} = 91.1mm$ $t_{sp} = 10mm$ Fin plate: $b_f = (98.2 + t_{sp})$ $= 108.2mm$ $t_{fp} = 10mm$

Check 2 – Nominal moment check		
Ref	Calculations	Remark
	Yield moment: $M_{el} = \frac{f_y I}{c} = \frac{275 \times 1666165}{50.74} \times 10^{-6}$ $= 9.03kNm$ Nominal moment: $M_{Ed} = V_{Ed} z_p$ $= 150 \times 50 \times 10^{-3}$ $= 7.5kNm < M_{el} = 9.03kNm$ ∴ The fin plate and stiffen plate will not yield under nominal moment Plastic section modular: $W_{pl} = \int z dA$ $= \left(\frac{108.2}{2} - 31.66\right) \times 1082 + \left(31.66 - \frac{10}{2}\right) \times 911$ $= 48568mm^3$ $M_{pl} = f_y W_{pl}$ $= 275 \times 48568 \times 10^{-3}$ $= 13.36kNm > M_{Ed} = 7.5kNm$	After adding stiffen plate: $z_p = 50mm$ OK

Check 3 – Weld resistance		
Ref	Calculations	Remark
	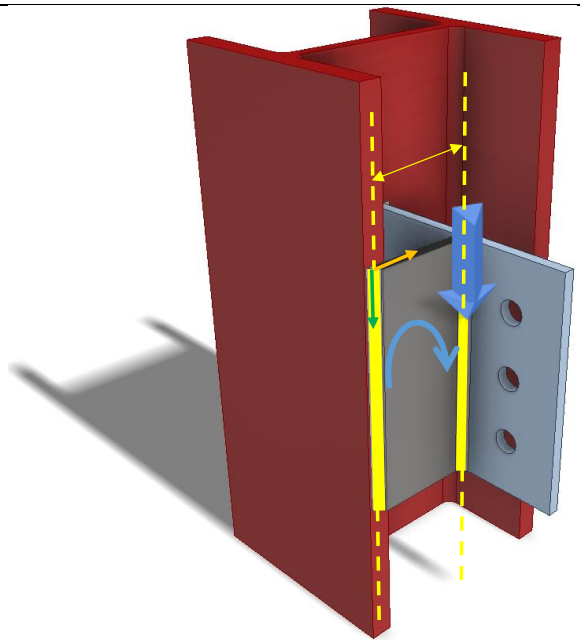	
SS EN1993-1-8	Fillet weld connecting stiffen plate and fin plate: Weld length: $L_{w,1} = d_p = 220mm$ Applied longitudinal stress: $\tau_L = \frac{V_{Ed}}{L_{w,1}} = \frac{150}{220} = 0.68kN/mm$ Choose fillet weld with 8mm leg length, 5.6mm throat thickness and grade S275: Longitudinal resistance: $F_{w,L,Rd} = 1.25kN/mm$ Transverse resistance: $F_{w,T,Rd} = 1.53kN/mm$ $\tau_L = 0.68kN/mm < F_{w,L,Rd} = 1.25kN/mm$ Fillet weld connecting stiffen plate and primary beam: Weld length: $L_w = d_p = 220mm$	Depth of fin plate: $d_p = 220mm$ OK

Check 3 – Weld resistance		
Ref	Calculations	Remark
	Polar moment of inertia: $J = \frac{d^3}{12} = \frac{220^3}{12} = 887333mm^3$ Assume the vertical shear force is shared by fillet welds connecting fin plate to column and fillet weld connecting strengthening plate to fin plate. Vertical stress: $\tau_v = \frac{V_{Ed}}{2L_w}$ $= \frac{150}{2 \times 220}$ $= 0.34kN/mm$ Transverse stress: $\tau_h = \frac{Mr_{zv}}{J} = \frac{V_{Ed}b_{sp}r_{zv}}{2J}$ $= \frac{150 \times 91.1 \times 110}{2 \times 887333}$ $= 0.847kN/mm$ Resultant stress: $\tau_r = \sqrt{\tau_v^2 + \tau_h^2}$ $= \sqrt{0.34^2 + 0.847^2}$ $= 0.913kN/mm$ Choose fillet weld with 8mm leg length, 5.6mm throat thickness and grade S275: Longitudinal resistance: $F_{w,L,Rd} = 1.25kN/mm$ Transverse resistance: $F_{w,T,Rd} = 1.53kN/mm$	Vertical distance between critical point and centroid: $r_{zv} = \frac{d}{2}$ $= 110mm$

Check 3 – Weld resistance		
Ref	Calculations	Remark
	Simplified method: $F_{w,L,Rd} = \frac{1.25kN}{mm} > \tau_{Ed} = 0.913kN/mm$ **Directional method:** $SF = \left(\frac{\tau_{v,Ed}}{F_{w,L,Rd}}\right)^2 + \left(\frac{\tau_{h,Ed}}{F_{w,T,Rd}}\right)^2$ $= \left(\frac{0.34}{1.25}\right)^2 + \left(\frac{0.847}{1.53}\right)^2$ $= 0.38 < 1.00$	OK! OK!

2.5.3 Example 22 – Stiffened extended fin-plates connecting to column in the minor axis (Section b)

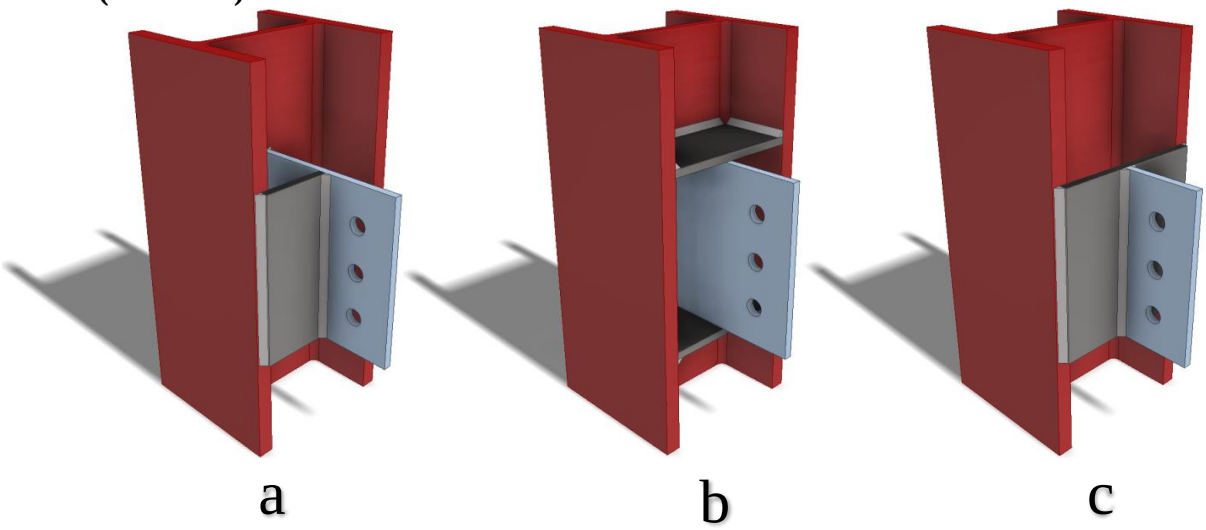

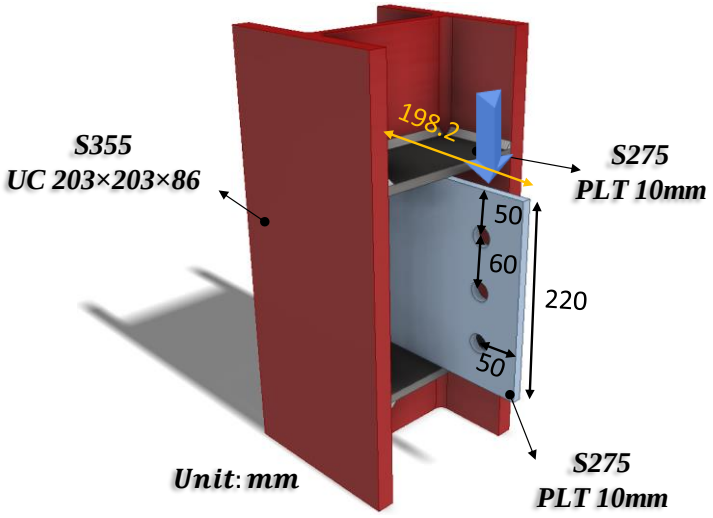

Check 1 – Weld resistance		
Ref	Calculations	Remark
	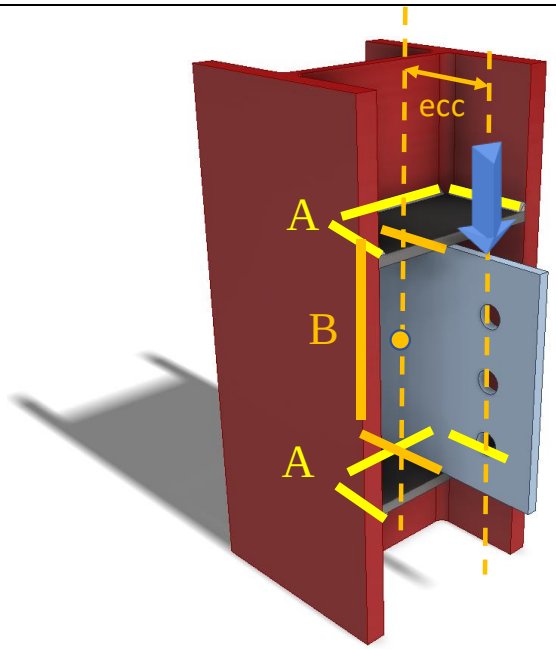	
SS EN1993-1-8	Fillet weld connecting the stiffener plate and column (A): Length of fillet weld parallel to applied load: $L_{w,L} = \frac{b_c - t_{wc}}{2} - cope\ hole\ size$ $= \frac{209.1 - 12.7}{2} - 15$ $= 83.2mm$ Length of fillet weld perpendicular to applied load: $L_{w,T} = d_c - 2t_{fc} - 2 \times cope\ hole\ size$ $= 222.2 - 2 \times 20.5 - 2 \times 15$ $= 151.2mm$ Nominal moment: $M_{Ed} = V_{Ed} ecc$ $= 200 \times 50 \times 10^{-3}$ $= 10kNm$	For UC203x203x86: $b_c = 209.1mm$ $t_{wc} = 12.7mm$ $d_c = 222.2mm$ $t_{fc} = 20.5mm$ Cope hole size: $n = 15mm$ Depth of fin plate: $d_p = 220mm$

Check 1 – Weld resistance		
Ref	Calculations	Remark
	Applied tensile force: $F_{Ed} = \frac{M_{Ed}}{d_p}$ $= \frac{10 \times 10^3}{220}$ $= 45.45kN$ Choose fillet weld with 8mm leg length, 5.6mm throat thickness and grade S275: Longitudinal resistance: $F_{w,L,Rd} = 1.25kN/mm$ Transverse resistance: $F_{w,T,Rd} = 1.53kN/mm$ Tensile capacity of the weld: $F_{Rd} = F_{w,L,Rd}L_{w,L} + F_{w,T,Rd}L_{w,T}$ $= 1.25 \times 83.2 + 1.53 \times 151.2$ $= 335.34kN > F_{Ed} = 45.45kN$	OK
	Two-sided C shape fillet weld connecting fin plate and stiffen plate (B): Location of center of gravity of welds group: $\bar{x} = \frac{b^2}{(2b + d)}$ $= \frac{98.2^2}{(2 \times 98.2 + 220)}$ $= 23.16mm$ $\bar{y} = \frac{d}{2}$ $= \frac{220}{2}$ $= 110mm$	Size of fillet weld: Width: $b = 98.2mm$ Depth: $d = 220mm$ Cope hole size: $n = 15mm$ $b' = b - n$ $= 98.2 - 15$ $= 83.2mm$ $d' = d - 2n$ $= 220 - 2 \times 15$ $= 190mm$

Check 1 – Weld resistance		
Ref	Calculations	Remark
	Unit throat area: $A_u = 2b' + d'$ $= 2 \times 83.2 + 190$ $= 356.4mm^2$ Moment arm between applied force and weld center: $r = 125.04mm$ Induced moment on welds: $M = \frac{V_{Ed}}{2} r$ $= \frac{200}{2} \times 125.04$ $= 12504kNmm$ Polar moment of inertia: $J = \frac{8b'^3 + 6b'd'^2 + d'^3}{12} - \frac{b'^4}{2b' + d'}$ $= \frac{8 \times 83.2^3 + 6 \times 83.2 \times 190^2 + 190^3}{12}$ $- \frac{83.2^4}{2 \times 83.2 + 190}$ $= 2322849mm^4$ **Critical point:** Horizontal distance from centroid: $r_{zh} = b - \bar{x}$ $= 98.2 - 23.16$ $= 75.04mm$ Vertical distance from centroid: $r_{zv} = \bar{y}$ $= 110mm$	

Check 1 – Weld resistance		
Ref	Calculations	Remark
	Vertical stress: $\tau_v = \frac{V_{Ed}}{A_u} + \frac{Mr_{zh}}{J}$ $= \frac{200}{2 \times 356.4} + \frac{12504 \times 75.04}{2322849}$ $= 0.68kN/mm$ Horizontal stress: $\tau_h = \frac{Mr_{zv}}{J}$ $= \frac{12504 \times 110}{2322849}$ $= 0.59kN/mm$ Resultant stress: $\tau_r = \sqrt{r_v^2 + r_h^2}$ $= \sqrt{0.68^2 + 0.59^2}$ $= 0.91kN/mm$ Choose fillet weld with 8mm leg length, 5.6mm throat thickness and grade S275: Longitudinal resistance: $F_{w,L,Rd} = 1.25kN/mm$ Transverse resistance: $F_{w,T,Rd} = 1.53kN/mm$ **Simplified method:** $F_{w,L,Rd} = 1.25kN/mm > \tau_r = 0.91kN/mm$	OK
	Directional method: $SF = \left(\frac{\tau_v}{F_{w,L,Rd}}\right)^2 + \left(\frac{\tau_h}{F_{w,T,Rd}}\right)^2$ $= \left(\frac{0.68}{1.25}\right)^2 + \left(\frac{0.59}{1.53}\right)^2$ $= 0.42 < 1.0$	OK

2.5.4 Example 22 – Stiffened extended fin-plates connecting to column in the minor axis (Section c)

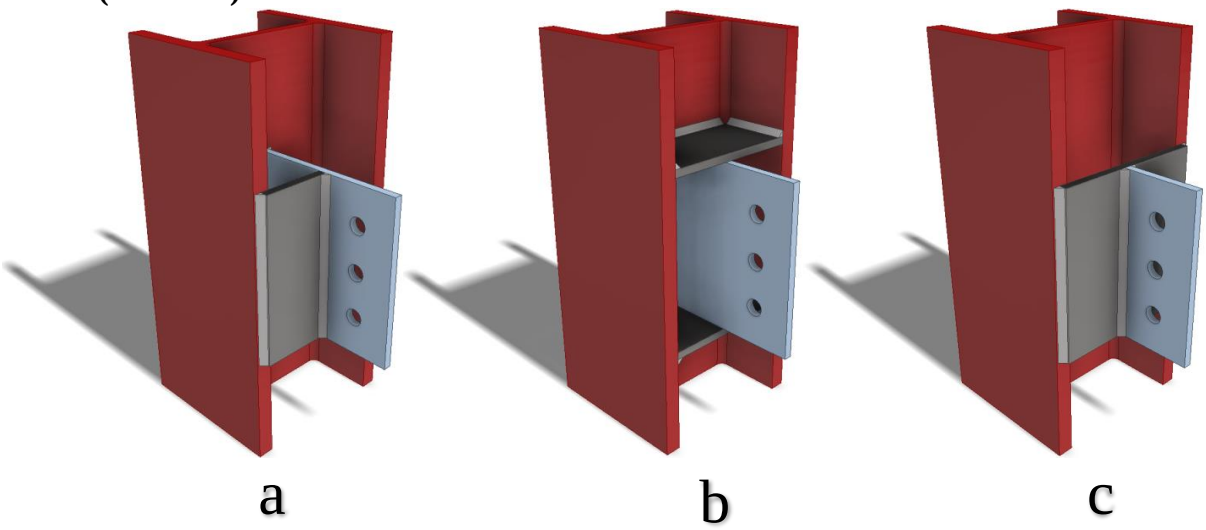

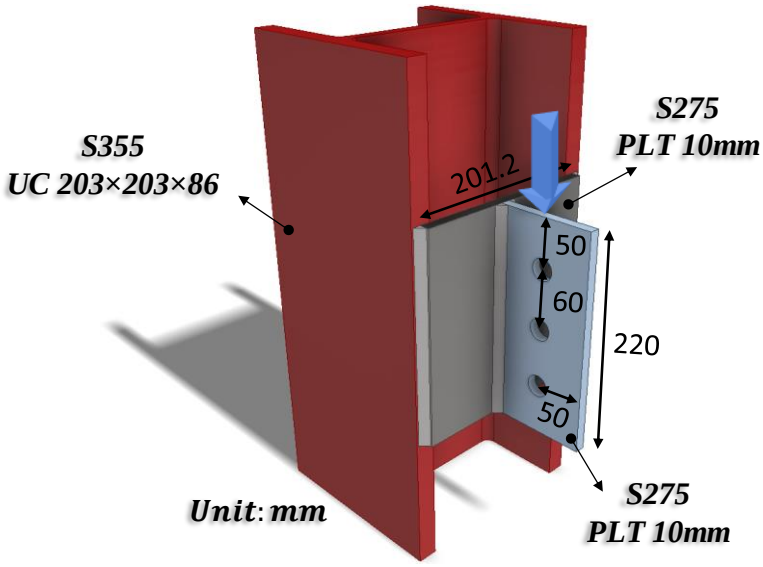

Check 1 – Weld resistance		
Ref	Calculations	Remark
SS EN1993-1-8	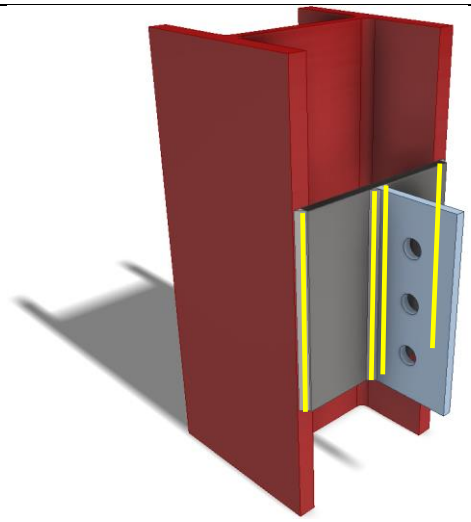 The weld connection is assumed to be stiffer than the bolt connection, hence the fillet weld for fin plate needs to be designed for nominal moment. Unit throat area: $A_u = 2d = 2 \times 220 = 440mm$ Eccentricity between weld and line of action: $ecc = z = 50mm$ Nominal moment due to eccentricity: $M = V_{Ed}ecc$ $= 200 \times 0.05$ $= 10kNm$ Polar moment of inertia: $J = \frac{d^3}{12} = \frac{220^3}{12} = 887333mm^3$ **Critical point:** Vertical stress: $\tau_v = \frac{V_{Ed}}{A_u}$ $= \frac{200}{440}$ $= 0.45kN/mm$	Size of the fillet welds: $d = 220mm$

Check 1 – Weld resistance		
Ref	Calculations	Remark
	Transverse stress: $\tau_h = \frac{Mr_{zv}}{2J}$ $= \frac{10000 \times 110}{887333 \times 2}$ $= 0.62kN/mm$ Resultant stress: $\tau_r = \sqrt{\tau_v^2 + \tau_h^2}$ $= \sqrt{0.45^2 + 0.62^2}$ $= 0.77kN/mm$	Vertical distance between critical point and centroid: $r_{zv} = \frac{d}{2}$ $= 110mm$
SCI_P363	Based on SCI_P363 design weld resistance for S275 fillet weld: Choose fillet weld with 8mm leg length, 5.6mm throat thickness and grade S275: Longitudinal resistance: $F_{w,L,Rd} = 1.25kN/mm$ Transverse resistance: $F_{w,T,Rd} = 1.53kN/mm$ **Simplified method:** $F_{w,L,Rd} = 1.25kN/mm > \tau_{Ed} = 0.77kN/mm$	OK!
	Directional method: $SF = \left(\frac{\tau_{v,Ed}}{F_{w,L,Rd}}\right)^2 + \left(\frac{\tau_{h,Ed}}{F_{w,T,Rd}}\right)^2$ $= \left(\frac{0.45}{1.25}\right)^2 + \left(\frac{0.62}{1.53}\right)^2$ $= 0.30 < 1.00$	OK!

Check 2 – Tying resistance of stiffen plate		
Ref	Calculations	Remark
	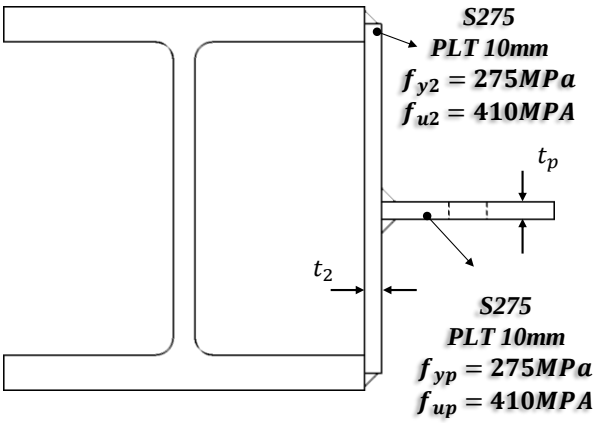	
SCI_P358	Assume the stiffener plate behaves like hollow section wall, the punching shear resistance: $t_p = 10mm$ $\leq \frac{t_2 f_{u,2}}{f_{y,p}\gamma_{M2}} = 10 \times \frac{410}{275 \times 1.25} = 11.92mm$ As the above requirement is met, the fin plate will yield before punching shear failure of the stiffener plate.	$\gamma_{M2} = 1.25$

Note:

The thickness of stiffen plate should be at least as thick as the thickness of fin plate to provide sufficient shear resistance. The design of such connection can follow the standard design for T-stub.

2.5.5 Example 23 – Stiffened column web

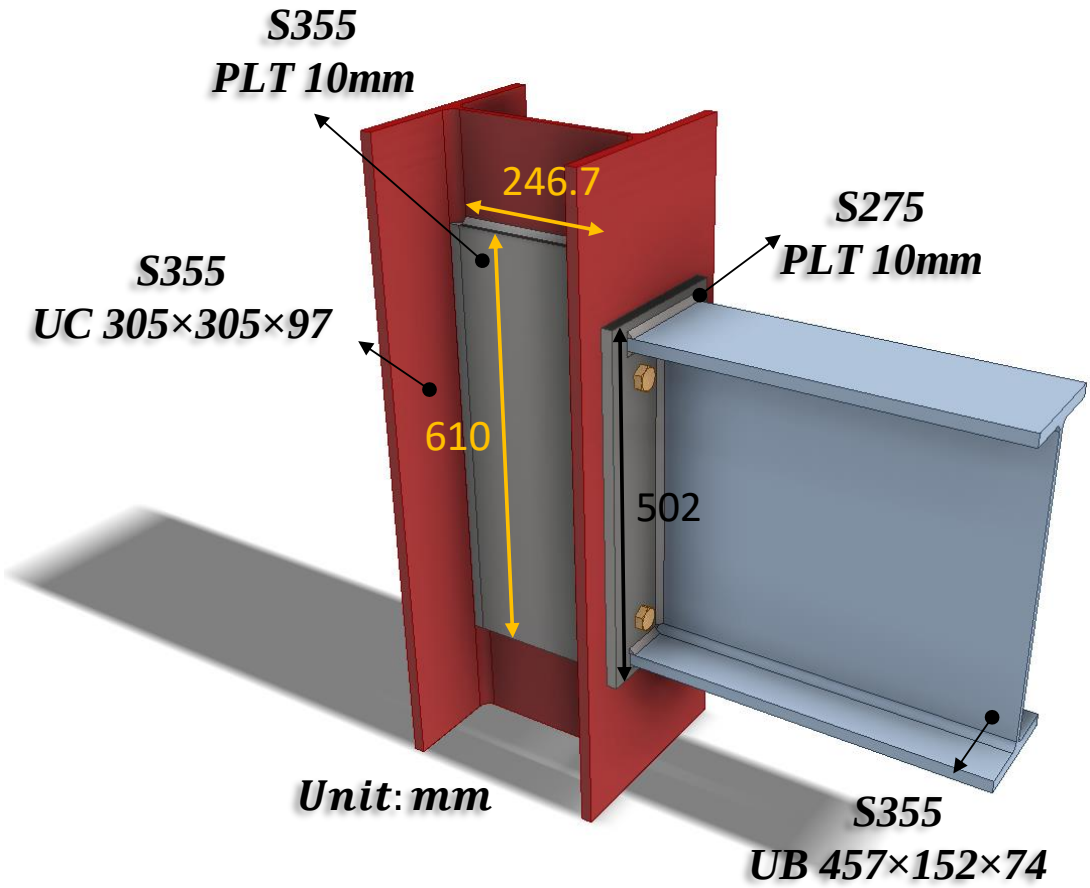

Dimensions and properties		
Ref	Calculations	Remark
	For column UC 305x305x97: Depth of column: $h_c = 307.9mm$ Width of column: $b_c = 305.3mm$ Thickness of column web: $t_{wc} = 9.9mm$ Thickness of column flange: $t_{fc} = 15.4mm$ Root radius: $r_c = 15.2mm$ Depth between fillets: $d_c = 246.7mm$ Cross-sectional area of column: $A_c = 12300mm^2$ Yield strength: $f_{yc} = 355MPa$ For beam UB 457x152x74: Depth of beam: $h_b = 462mm$ Width of beam: $b_b = 154.4mm$ Thickness of beam web: $t_{wb} = 9.6mm$ Thickness of beam flange: $t_{fb} = 17mm$ Root radius: $r_b = 10.2mm$ Depth between fillets: $d_b = 407.6mm$ Cross-sectional area of beam: $A_b = 9450mm^2$ Yield strength: $f_{yb} = 355MPa$ For supplementary web plate (SWP): Thickness of the SWP: $t_p = 10mm > t_{wc}$ Width of SWP (infill weld): $b_s = d_c = 246.7mm$ Width of SWP (for shear): $b_s = h_c - 2\left(t_{fc} + r_c + t_p\right) = 226.7mm$ Limiting width: $40\varepsilon t_p = 40\sqrt{\frac{235}{355}} \times 10 = 325.45mm > b_s$ Fillet weld leg length: $s = t_p = 10mm$ Depth of SWP: $d_p = 610mm$	

Check 1 – Column web in tension		
Ref	Calculations	Remark
	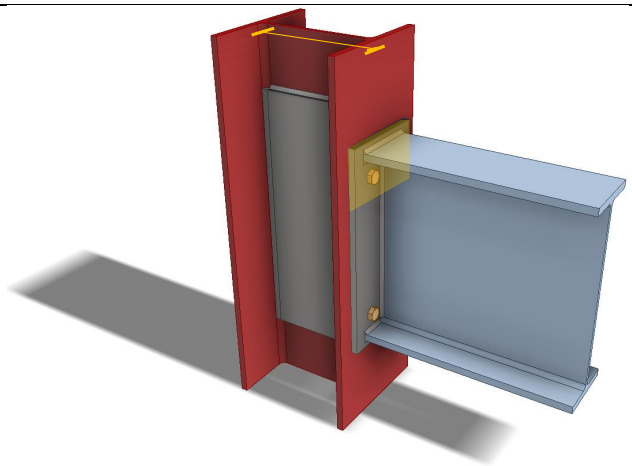	
SCI_P398 SS EN1993-1-8	For T-stubs on column side: $m = \frac{w - t_{wc}}{2} - 0.8r_c$ $= \frac{100 - 9.9}{2} - 0.8 \times 15.2$ $= 32.89mm$ Edge distance: $e = 60mm$ Effective length for circular patterns: $l_{eff,cp} = 2\pi m = 2\pi \times 32.89 = 206.65mm$ Effective length for non-circular patterns: $l_{eff,nc} = 4m + 1.25e = 4 \times 32.89 + 1.25 \times 60$ $= 206.56mm$	
6.2.6.3 (3)	Effective width of the column web in tension: $b_{eff,t,wc} = \min(l_{eff,cp}; l_{eff,nc})$ $= \min(206.65; 206.56)$ $= 206.56mm$	

Check 1 – Column web in tension		
Ref	Calculations	Remark
	Shear area of column: $A_{vc} = A_c - 2b_c t_{fc} + (t_{wc} + 2r_c)t_{fc}$ $= 12300 - 2 \times 305.3 \times 15.4 + (9.9 + 2 \times 15.2) \times 15.4$ $= 3517.38mm^2$ For single-sided joint, transformation parameter: $\beta = 1$	
Table 6.3	Reduction factor: $\omega = \omega_1 = \dfrac{1}{\sqrt{1 + 1.3\left(\dfrac{b_{eff,c,wc}t_{wc}}{A_{vc}}\right)^2}}$ $= \dfrac{1}{\sqrt{1 + 1.3 \times \left(\dfrac{206.56 \times 9.9}{3517.38}\right)^2}}$ $= 0.83$ Column web tension capacity without SWP: $F_{t,wc,Rd} = \dfrac{\omega b_{eff,t,wc} t_{wc} f_{yc}}{\gamma_{M0}}$ $= \dfrac{0.83 \times 206.56 \times 9.9 \times 355}{1.0} \times 10^{-3}$ $= 605.09kN$ After adding one SWP to the column web, the effective thickness of the column web is increased by 50%. $t_{eff,wc,1} = 1.5t_{wc} = 1.5 \times 9.9 = 14.85mm$	

Check 1 – Column web in tension		
Ref	Calculations	Remark
	Shear area of the column with one SWP: $A_{vc,1} = 1.5(A_c - 2b_c t_{fc}) + (t_{eff,wc,1} + 2r_c)t_{fc}$ $= 1.5 \times (12300 - 2 \times 305.3 \times 15.4) + (14.85 + 2 \times 15.2) \times 15.4$ $= 5041.99mm^2$ Reduction factor with one SWP: $\omega' = \frac{1}{\sqrt{1 + 1.3\left(\frac{b_{eff,c,wc}t_{eff,wc,1}}{A_{vc,1}}\right)^2}}$ $= \frac{1}{\sqrt{1 + 1.3 \times \left(\frac{206.56 \times 14.85}{5041.99}\right)^2}}$ $= 0.82$ Column web tension capacity with one SWP: $F_{t,wc,Rd} = \frac{\omega' b_{eff,t,wc} t_{eff,wc,1} f_{yc}}{\gamma_{M0}}$ $= \frac{0.82 \times 206.56 \times 14.85 \times 355}{1.0} \times 10^{-3}$ $= 894.75kN$ After adding two SWPs to the column web, the effective thickness of the column web is increased by 100%. $t_{eff,wc,2} = 2t_{wc} = 2 \times 9.9 = 19.8mm$ Shear area of the column with one SWP: $A_{vc,2} = 2(A_c - 2b_c t_{fc}) + (t_{eff,wc,2} + 2r_c)t_{fc}$ $= 2 \times (12300 - 2 \times 305.3 \times 15.4) + (19.8 + 2 \times 15.2) \times 15.4$ $= 6566.6mm^2$	

Check 1 – Column web in tension		
Ref	Calculations	Remark
	Reduction factor with one SWP: $\omega'' = \dfrac{1}{\sqrt{1 + 1.3\left(\dfrac{b_{eff,c,wc}t_{eff,wc,2}}{A_{vc,2}}\right)^2}}$ $= \dfrac{1}{\sqrt{1 + 1.3 \times \left(\dfrac{206.56 \times 19.8}{6566.6}\right)^2}}$ $= 0.82$ Column web tension capacity with one SWP: $F_{t,wc,Rd} = \dfrac{\omega'' b_{eff,t,wc} t_{eff,wc,2} f_{yc}}{\gamma_{M0}}$ $= \dfrac{0.82 \times 206.56 \times 19.8 \times 355}{1.0} \times 10^{-3}$ $= 1183.79kN$	

Check 2 – Column web in compression		
Ref	Calculations	Remark
SCI_P398 SS EN1993-1-8	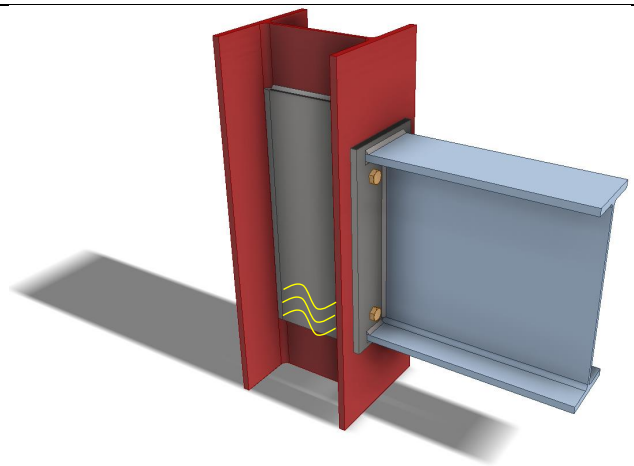 Thickness of the end plate: $t_{ep} = 15mm$ Effective length of column web under compression: $b_{eff,c,wc} = t_{fb} + 2s_f + 5(t_{fc} + r_c) + 2t_{ep}$ $= 17 + 2 \times 12 + 5 \times (15.4 + 15.2) + 2 \times 15$ $= 224mm$ For column web without SWP: Non-dimensional slenderness ratio for plate: $\bar{\lambda}_p = 0.932\sqrt{\frac{b_{eff,c,wc} d_c f_{yc}}{E t_{wc}^2}}$ $= 0.932\sqrt{\frac{224 \times 246.7 \times 355}{210000 \times 9.9^2}}$ $= 0.91 > 0.72$ $\therefore \rho = \frac{\bar{\lambda}_p - 0.2}{\bar{\lambda}_p^2}$ $= \frac{(0.91 - 0.2)}{0.91^2}$ $= 0.86$	

Check 2 – Column web in compression		
Ref	Calculations	Remark
	Column web without SWP transverse compression capacity: $F_{c,wc,Rd} = \frac{\omega k_{wc} \rho b_{eff,c,wc} t_{wc} f_{yc}}{\gamma_{M1}}$ $= \frac{0.83 \times 1.0 \times 0.86 \times 224 \times 9.9 \times 355}{1.0} \times 10^{-3}$ $= 562.64kN$ For column with one SWP: $\bar{\lambda}_p = 0.932 \sqrt{\frac{b_{eff,c,wc} d_c f_{yc}}{E t_{eff,wc,1}^2}}$ $= 0.932 \sqrt{\frac{224 \times 246.7 \times 355}{210000 \times 14.85^2}}$ $= 0.61 < 0.72$ $\therefore \rho = 1.0$ Column web with one SWP transverse compression capacity: $F_{c,wc,Rd} = \frac{\omega' k_{wc} \rho b_{eff,c,wc} t_{eff,wc,1} f_{yc}}{\gamma_{M1}}$ $= \frac{0.82 \times 1.0 \times 1.0 \times 224 \times 14.85 \times 355}{1.0} \times 10^{-3}$ $= 970.29kN$ For column with two SWPs: $\bar{\lambda}_p = 0.932 \sqrt{\frac{b_{eff,c,wc} d_c f_{yc}}{E t_{eff,wc,2}^2}}$ $= 0.932 \sqrt{\frac{224 \times 246.7 \times 355}{210000 \times 19.8^2}}$ $= 0.45 < 0.72$	k_{wc} is assumed to be 1.0

Check 2 – Column web in compression		
Ref	Calculations	Remark
	$\therefore \rho = 1.0$ Column web with two SWPs transverse compression capacity: $F_{c,wc,Rd} = \frac{\omega'' k_{wc} \rho b_{eff,c,wc} t_{eff,wc,2} f_{yc}}{\gamma_{M1}}$ $= \frac{0.82 \times 1.0 \times 1.0 \times 224 \times 19.8 \times 355}{1.0} \times 10^{-3}$ $= 1283.73kN$	

Check 3 – Column web in shear		
Ref	Calculations	Remark
	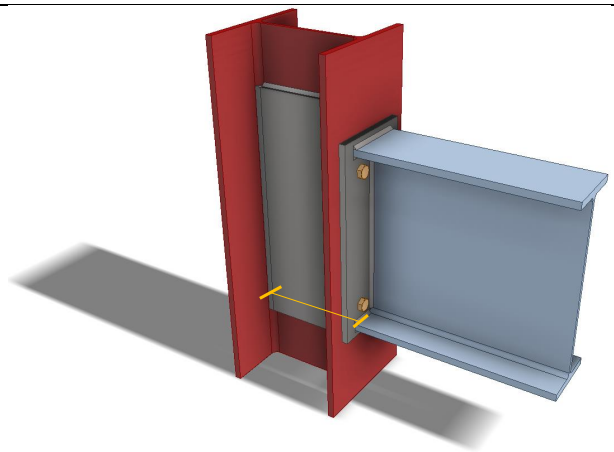 For column web without SWP: $\frac{d_c}{t_{wc}} = \frac{246.7}{9.9} = 24.92 < 69\varepsilon = 69\sqrt{\frac{235}{355}} = 56.14$ Shear resistance of column web: $V_{wp,Rd} = \frac{0.9 f_{yc} A_{vc}}{\gamma_{M0}\sqrt{3}}$ $= \frac{0.9 \times 355 \times 3517.38}{\sqrt{3}} \times 10^{-3}$ $= 648.83kN$ For column with SWP: *For column web panel with SWP under shear force, only one SWP will contribute to the shear area and the increase is independent of the thickness of the SWP $t_{eff,wc,1} = 1.5t_{wc} = 14.85mm$ $\frac{d_c}{t_{eff,wc,1}} = \frac{246.7}{14.85} = 16.61 < 69\varepsilon$ $A_{vc,s} = A_{vc} + b_s t_{wc}$ $= 3517.38 + 226.7 \times 9.9$ $= 5761.71mm^2$	

Check 3 – Column web in shear		
Ref	Calculations	Remark
	$V_{wp,Rd,s} = \frac{0.9 f_{yc} A_{vc,s}}{\gamma_{M0}\sqrt{3}}$ $= \frac{0.9 \times 355 \times 5761.71}{\sqrt{3}} \times 10^{-3}$ $= 1062.82kN$	

Check 4 – Dimensions of SWP		
Ref	Calculations	Remark
	The minimum depth requirement for SWP: $d_{p,min} = h_b - e_x - \frac{1}{2}t_{fb} + b_{eff,t,wc} + b_{eff,c,wc}$ $= 462 - 60 - \frac{17}{2} + 206.56 + 224$ $= 608.78mm < d_p = 610mm$ For SWP is only required for shear, the perimeter fillet welds may just reach the fillets of the column section. As shown in A. For SWP is required to supplement the tension or compression resistance, infill weld should be used. As shown in B. 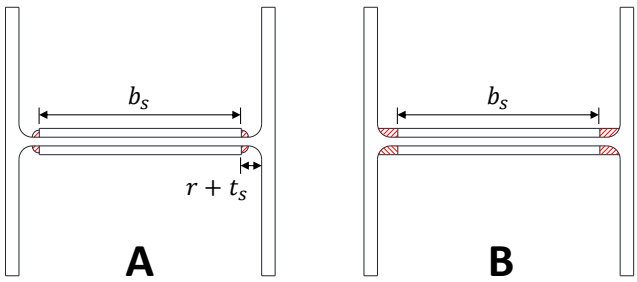	

2.6 Splice connections

Splice connections subjected to flexure, shear force and/or axial force for beams and columns can generally be achieved by the following:

- Bolted cover plate splice
- Bolted end plate splice
- Welded splice

A beam splice connection ensures the continuity between two beams, it resists moment, axial forces and shear in the beam. The flange cover plates resist tension and compression forces while the web cover plate resists shear, bending and axial forces. To ensure the rigidity of the connection, slip resistance of the connection is checked. According to SS EN 1993-1-8 Clause 3.9.3 (1), for hybrid connections, final tightening of the bolts is carried out after the welding is completed.

The design steps of beam spice can be summarized as follow:

<u>Distributions of internal forces</u>

For a splice in a flexural member, the applied moment is shared by the beam web and flange. The proportion of moment taken by beam web depends on the second moment of area of beam web.

The force in flange due to moment:

$$F_{f,M} = \left(1 - \frac{I_w}{I_y}\right)\left(\frac{M_{Ed}}{h_b - t_f}\right)$$

where

I_w: second moment of area of beam web

$$I_w = \frac{\left(h - 2t_f\right)^3 t_w}{12}$$

I_y: second moment of area of whole beam section

h_b: depth of beam

t_f: thickness of beam flange

M_{Ed}: design moment in the beam splice

The force in flange due to axial force:

$$F_{1,N} = \left(1 - \frac{A_w}{A}\right)\frac{N_{Ed}}{2}$$

where

A_w: area of the member web

A: area of the beam cross section

N_{Ed}: design axial force

Moment in the web due to applied moment:

$$M_{w,M} = \left(\frac{I_w}{I_y}\right) M_{Ed}$$

Moment in the web due to eccentricity:

$$M_{ecc} = V_{Ed} ecc$$

where

V_{Ed}: design shear force

ecc: eccentricity of the bolt group from the centerline of the splice

Force in web due to axial force:

$$F_{w,N} = \left(\frac{A_w}{A}\right) N_{Ed}$$

Force in web due to vertical shear:

$$F_{w,v} = V_{Ed}$$

Forces in bolts:

The forces are assumed to be shared equally between bolts for both flange and web splices.

Vertical forces on extreme bolt due to moment:

$$F_{z,M} = \frac{(M_{w,M} + M_{ecc}) x_{max}}{I_{bolts}}$$

where

x_{max}: the horizontal distance of the extreme bolt from the centroid of the group

I_{bolts}: second moment of the bolt group

$$I_{bolts} = \Sigma(x_i^2 + z_i^2)$$

Horizontal forces on extreme bolt due to moment:

$$F_{x,M} = \frac{(M_{w,M} + M_{ecc}) z_{max}}{I_{bolts}}$$

where

z_{max}: vertical distance of the extreme bolt from the centroid of the group

Maximum resultant force on extreme bolt:

$$F_v = \sqrt{\left(F_{z,v} + F_{z,M}\right)^2 + \left(F_{x,N} + F_{x,M}\right)^2}$$

where

$$F_{z,v} = \frac{F_{w,v}}{number\ of\ bolts\ in\ web}$$

$$F_{x,N} = \frac{F_{w,N}}{number\ of\ bolts\ in\ web}$$

<u>Bolt group resistance</u>

Slip resistance of a preloaded bolt (SS EN1993-1-8 Table 3.6 & Table 3.7):

$$F_{s,Rd} = \frac{k_s n \mu}{\gamma_{M3}} F_{p,C} \geq F_v$$

where

n: number of friction planes

k_s: can be found in SS EN 1993-1-8 Table 3.6

μ: slip factor, given in SS EN 1993-1-8 Table 3.7

The slip factor obtained either by specific tests for the friction surface in accordance with EN 1090-2 Requirements for the execution of steel structures or when relevant as given in Table 3.7.

$F_{p,c}$: preloading forces

$F_{p,C} = 0.7 f_{ub} A_s$

For bearing resistance in flange and web spices, the checking is same as that in section 2.3.1.

Reduction due to long joint effect may be considered, refer to section 2.3.1 for details.

<u>Resistance of tension flange</u>

Full penetration butt weld is adopted so only the resistance of the tension flange needs to be checked for the flange splice experienced tension.

Resistance of the gross section:

$$F_{pl,Rd} = \frac{A_g f_y}{\gamma_{M0}}$$

where

A_g: area of the gross section

$A_g = b_f t_f$

Resistance of the net section:

$$F_{u,Rd} = \frac{0.9 A_{net} f_u}{\gamma_{M2}}$$

where

A_{net}: net area of the section

$A_{net} = (b_f - 2d_0) t_f$

<u>Resistance of compression flange and cover plate</u>

Local buckling of the compression cover plate between rows of bolts needs to be checked if:

$$\frac{p_1}{t_{fp}} > 9\varepsilon$$

where

p_1: distance between bolts in compression flange

t_{fp}: thickness of flange cover plate

<u>Resistance of web splice</u>

Resistance of gross shear area:

$$V_{wp,g,Rd} = \frac{h_{wp} t_{wp}}{1.27} \frac{f_{y,wp}}{\sqrt{3}\gamma_{M0}}$$

Resistance of net shear area:

$$V_{wp,net,Rd} = \frac{A_{v,wp,net}\left(\frac{f_{up}}{\sqrt{3}}\right)}{\gamma_{M2}}$$

where

$A_{v,wp,net} = (h_{wp} - nd_0)t_{wp}$

n: number of bolt rows in web splice

Shear resistance of web cover plate:

$V_{pl,wp,Rd} = \min(V_{v,wp,Rd}; V_{wp,net,Rd})$

Bending resistance of web cover plate:

$$M_{c,wp,Rd} = \frac{W_{wp}(1-\rho)f_{yp}}{\gamma_{M0}}$$

where

W_{wp}: elastic modulus of cover plate

$$W_{wp} = \frac{t_{wp} h_{wp}^2}{6}$$

For low shear $V_{Ed} < V_{pl,wp,Rd}/2 : \rho = 0$

For high shear $V_{Ed} > V_{pl,wp,Rd}/2$:

$$\rho = \left(\frac{2V_{Ed}}{V_{pl,wp,Rd}} - 1\right)^2$$

*If axial loading exists, the web cover plate needs to be checked according to SS EN 1993-1-8 6.2.10 and 6.2.9.2.

$$\frac{N_{wp,Ed}}{N_{wp,Rd}} + \frac{M_{wp,Ed}}{M_{wp,Rd}} \leq 1$$

The check for shear resistance of beam web is similar to section 2.3.1.

2.6.1 Example 24 – Beam splice – A combination of welding to the top flange and bolting to the web & bottom flange

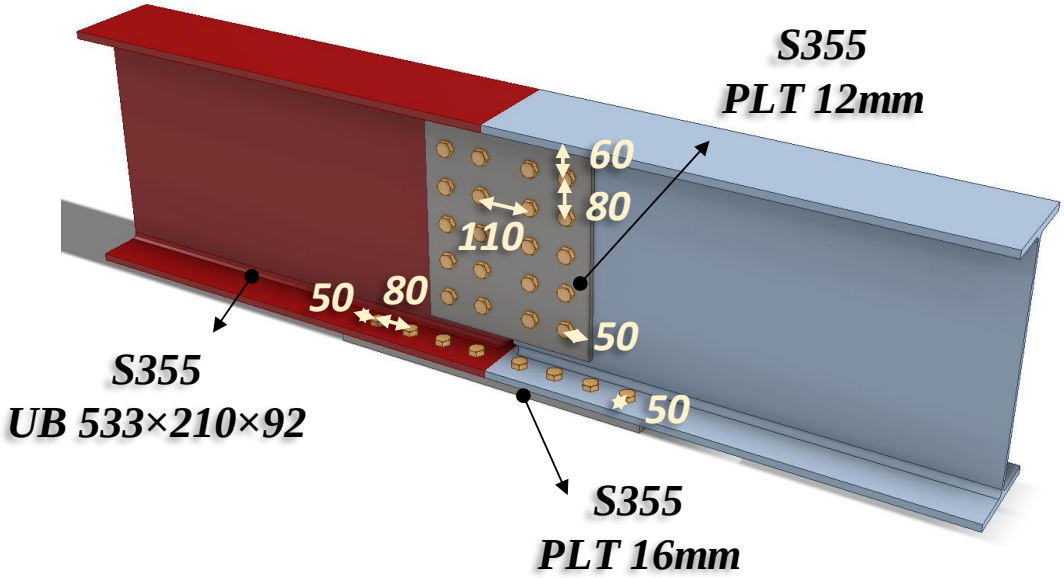

Distribution of internal forces		
Ref	Calculations	Remark
SCI_P398 SS EN1993-1-8	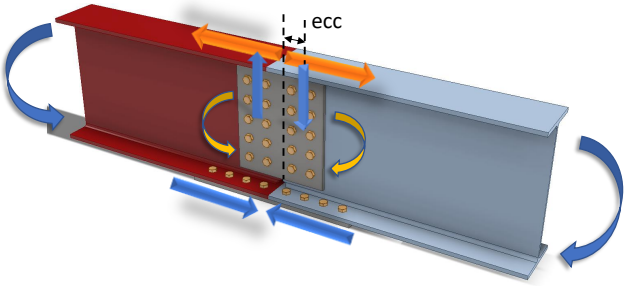 For a splice in a flexural member, the applied moment is shared by the beam web and flange. The proportion of moment taken by beam web depends on the second moment of area of beam web. The second moment of area of beam web: $I_w = \frac{(h-2t_f)^3 t_w}{12}$ $= \frac{(533.1-2\times 15.6)^3 \times 10.1}{12} \times 10^{-4}$ $= 10641.23cm^4$ The force in each flange due to moment: $F_{f,M} = \left(1-\frac{I_w}{I_y}\right)\left(\frac{M_{Ed}}{h_b - t_f}\right)$ $= \left(1-\frac{10641.23}{55200}\right) \times \left(\frac{100}{533.1-15.6}\right) \times 10^3$ $= 155.99kN$ Moment in the web due to applied moment: $M_{w,M} = \left(\frac{I_w}{I_y}\right) M_{Ed}$ $= \left(\frac{10641.23}{55200}\right)(100)$ $= 19.28kNm$	For UB 533x210x92: Depth: $h = 533.1mm$ Width: $b = 209.3mm$ Thickness of web: $t_w = 10.1mm$ Thickness of flange: $t_f = 15.6mm$ Root radius: $r = 12.7mm$ Depth between fillets: $d_b = 476.5mm$ Second moment of area: $I_y = 55200cm^4$ Yield strength: $f_y = 355MPa$ Ultimate strength: $f_u = 510MPa$

Distribution of internal forces		
Ref	Calculations	Remark
	Moment in web due to eccentricity: $M_{ecc} = V_{Ed} ecc$ $= 100 \times \left(\frac{110}{2} + \frac{80}{2}\right) \times 10^{-3}$ $= 9.5 kNm$ Force in web due to vertical shear: $F_{w,V} = V_{Ed} = 100 kN$ Force in flange bolts: $F_{f,v} = \frac{F_{f,M}}{n_f} = \frac{155.99}{8} = 19.50 kN$ Force in web bolts: Vertical forces per bolt due to shear: $F_{z,v} = \frac{F_{w,V}}{n_w} = \frac{100}{10} = 10 kN$ Second moment of the bolt group: $I_{bolts} = \Sigma(x_i^2 + z_i^2)$ $= 4 \times 80^2 + 4 \times 160^2 + 10 \times 40^2$ $= 144000 mm^2$ Vertical forces on extreme bolt due to moment: $F_{z,M} = \frac{(M_{w,M} + M_{ecc}) x_{max}}{I_{bolts}}$ $= (19.28 + 9.5) \times \frac{40}{144000} \times 10^3$ $= 7.99 kN$	No. of bolts in flange: $n_f = 8$ No. of bolts in web: $n_w = 10$

Distribution of internal forces		
Ref	Calculations	Remark
	Horizontal forces on extreme bolt due to moment: $F_{x,M} = \frac{(M_{w,M} + M_{ecc})z_{max}}{I_{bolts}}$ $= (19.28 + 9.5) \times \frac{160}{144000} \times 10^3$ $= 31.98kN$ Maximum resultant force on extreme bolt: $F_v = \sqrt{(F_{z,v} + F_{z,M})^2 + F_{x,M}^2}$ $= \sqrt{(10 + 7.99)^2 + 31.98^2}$ $= 36.69kN$	

Check 1 – Bolt group resistance		
Ref	Calculations	Remark
	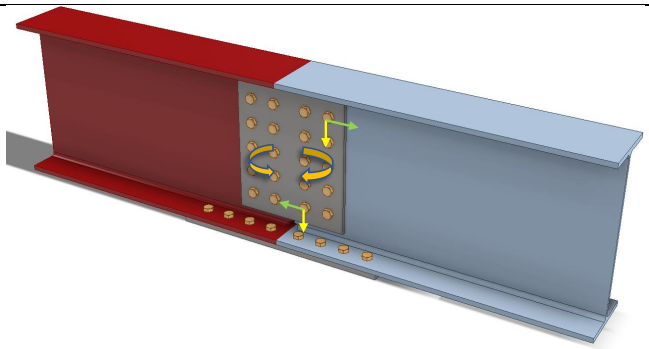	
SS EN1993-1-8 3.9.1	**HSFG bolts (grade 8.8 or above) are required for this connection as the connections involve both welding and bolts.** To ensure continuity between the beams, class 8.8 preloaded bolts M20 is used: Preloading force: $F_{p,C} = 0.7 f_{ub} A_s$ $= 0.7 \times 800 \times 245 \times 10^{-3}$ $= 137.2kN$	For class 8.8 M20 bolts: Shear area: $A_s = 245mm^2$ Ultimate strength: $f_{ub} = 800MPa$
Table 3.6 Table 3.7	Slip resistance of a preloaded class 8.8 bolt: $F_{s,Rd} = \frac{k_s n \mu}{\gamma_{M3}} F_{p,C}$ $= \frac{1.0 \times 1 \times 0.5}{1.25} \times 137.2$ $= 54.88kN > F_v = 36.69kN$ ∴ The slip resistance of the preloaded bolts is adequate Torque value affected by galvanizing, lubricants, etc. The slip factor of the friction surface needs to be determined by specific tests in accordance with EN 1090-2 "Requirements for the execution of steel structures" or when relevant as given in SS EN 1993-1-8 Table 3.7.	Assume bolts in normal holes: $k_s = 1.0$ Assume class of friction surfaces: A: $\mu = 0.5$ $n = 1$ $\gamma_{M3} = 1.25$

Check 1 – Bolt group resistance		
Ref	Calculations	Remark
	Bearing resistance in web splice: **Web cover plate**: In vertical direction: $k_1 = \min\left(\frac{2.8e_2}{d_0} - 1.7; \frac{1.4p_2}{d_0} - 1.7; 2.5\right)$ $= \min\left(2.8 \times \frac{50}{22} - 1.7; 1.4 \times \frac{80}{22} - 1.7; 2.5\right)$ $= 2.5$ $\alpha_b = \min\left(\frac{e_1}{3d_0}; \frac{p_1}{3d_0} - \frac{1}{4}; \frac{f_{ub}}{f_{up}}; 1.0\right)$ $= \min\left(\frac{60}{3 \times 22}; \frac{80}{3 \times 22} - \frac{1}{4}; \frac{800}{510}; 1.0\right)$ $= 0.91$ $F_{b,ver,Rd} = \frac{k_1 \alpha_b f_{up} d t_{wp}}{\gamma_{M2}}$ $= \frac{2.5 \times 0.91 \times 510 \times 20 \times 12}{1.25} \times 10^{-3}$ $= 222.55kN$ In horizontal direction: $k_1 = \min\left(\frac{2.8e_1}{d_0} - 1.7; \frac{1.4p_1}{d_0} - 1.7; 2.5\right)$ $= \min\left(2.8 \times \frac{60}{22} - 1.7; 1.4 \times \frac{80}{22} - 1.7; 2.5\right)$ $= 2.5$ $\alpha_b = \min\left(\frac{e_2}{3d_0}; \frac{p_2}{3d_0} - \frac{1}{4}; \frac{f_{ub}}{f_{up}}; 1.0\right)$ $= \min\left(\frac{50}{3 \times 22}; \frac{80}{3 \times 22} - \frac{1}{4}; \frac{800}{510}; 1.0\right)$ $= 0.76$	$t_{wp} = 12mm$ $\gamma_{M2} = 1.25$ $f_{yp} = 355MPa$ $f_{up} = 510MPa$

Check 1 – Bolt group resistance		
Ref	Calculations	Remark
	$F_{b,hor,Rd} = \frac{k_1 \alpha_b f_{up} d t_p}{\gamma_{M2}}$ $= \frac{2.5 \times 0.76 \times 510 \times 20 \times 12}{1.25} \times 10^{-3}$ $= 185.45kN$ $\frac{F_{z,M} + F_{z,V}}{F_{b,ver,Rd}} + \frac{F_{x,M}}{F_{b,hor,Rd}}$ $= \frac{7.99 + 10}{222.25} + \frac{31.98}{185.45}$ $= 0.25 < 1.0$ **Beam web**: In vertical direction: $k_1 = 2.5$ $\alpha_b = \min\left(\frac{e_{1,b}}{3d_0}; \frac{p_1}{3d_0} - \frac{1}{4}; \frac{f_{ub}}{f_{up}}; 1.0\right)$ $= \min\left(\frac{106.55}{3 \times 22}; \frac{80}{3 \times 22} - \frac{1}{4}; \frac{800}{510}; 1.0\right)$ $= 0.96$ $F_{b,ver,Rd} = \frac{k_1 \alpha_b f_{up} d t_w}{\gamma_{M2}}$ $= \frac{2.5 \times 0.96 \times 510 \times 20 \times 10.1}{1.25} \times 10^{-3}$ $= 198.24kN$ In horizontal direction: $k_1 = 2.5$ $\alpha_b = 0.76$	**OK**

Check 1 – Bolt group resistance		
Ref	Calculations	Remark
	$F_{b,hor,Rd} = \frac{k_1 \alpha_b f_{up} d t_w}{\gamma_{M2}}$ $= \frac{2.5 \times 0.76 \times 510 \times 20 \times 10.1}{1.25} \times 10^{-3}$ $= 156.09kN$ $\frac{F_{z,M} + F_{z,V}}{F_{b,ver,Rd}} + \frac{F_{x,M}}{F_{b,hor,Rd}}$ $= \frac{7.99 + 10}{198.24} + \frac{31.98}{156.09}$ $= 0.30 < 1.0$	**OK**
	Bearing resistance in flange splice: Flange cover plate: $k_1 = \min\left(\frac{2.8e_2}{d_0} - 1.7; \frac{1.4p_2}{d_0} - 1.7; 2.5\right)$ $= \min\left(2.8 \times \frac{50}{22} - 1.7; 1.4 \times \frac{109.3}{22} - 1.7; 2.5\right)$ $= 2.5$ $\alpha_b = \min\left(\frac{e_1}{3d_0}; \frac{p_1}{3d_0} - \frac{1}{4}; \frac{f_{ub}}{f_{up}}; 1.0\right)$ $= \min\left(\frac{50}{3 \times 22}; \frac{80}{3 \times 22} - \frac{1}{4}; \frac{800}{510}; 1.0\right)$ $= 0.76$ $F_{b,Rd} = \frac{k_1 \alpha_b f_{up} d t_{fp}}{\gamma_{M2}}$ $= \frac{2.5 \times 0.76 \times 510 \times 20 \times 16}{1.25} \times 10^{-3}$ $= 247.27kN > F_{f,V} = 19.50kN$	**OK**

Check 1 – Bolt group resistance		
Ref	Calculations	Remark
	Beam flange: $k_1 = 2.5$ $\alpha_b = 0.76$ $F_{b,Rd} = \frac{k_1 \alpha_b f_{up} d t_f}{\gamma_{M2}}$ $= \frac{2.5 \times 0.76 \times 510 \times 20 \times 15.6}{1.25} \times 10^{-3}$ $= 241.09kN > F_{f,V} = 19.50kN$	 **OK**

Note:

According to SS EN 1993-1-8 Clause 3.9.3 (1), for hybrid connections, final tightening of the bolts is carried out after the welding is completed

Check 2 – Resistance of tension flange and cover plate		
Ref	Calculations	Remark
SCI_P358 SCI_P398	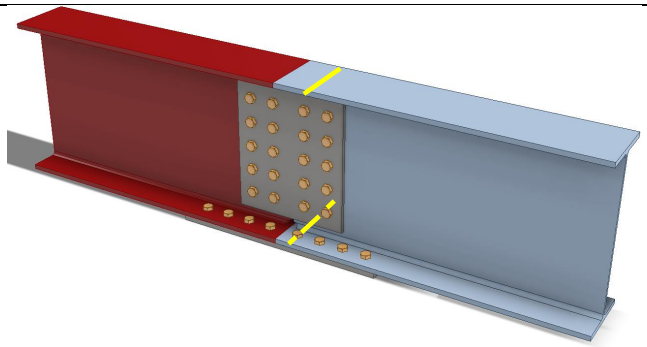 Resistance of tension flange: Area of gross section: $A_g = b_f t_f$ $= 209.3 \times 15.6$ $= 3265.08mm^2$ Resistance of the gross section: $F_{pl,Rd} = \frac{A_g f_y}{\gamma_{M0}}$ $= \frac{3265.08 \times 355}{1.0} \times 10^{-3}$ $= 1159.10kN$ Net area: $A_{net} = (b_f - 2d_0)t_f$ $= (209.3 - 2 \times 22) \times 15.6$ $= 2578.68mm^2$ Resistance of net section: $F_{u,Rd} = \frac{0.9A_{net}f_u}{\gamma_{M2}}$ $= \frac{0.9 \times 2578.68 \times 510}{1.25} \times 10^{-3}$ $= 946.89kN$	

Check 2 – Resistance of tension flange and cover plate		
Ref	Calculations	Remark
	$F_{f,t,Rd} = \min\left(F_{pl,Rd}; F_{u,Rd}\right)$ $= \min(1159.10; 946.89)$ $= 946.89kN > F_{f,M} = 155.99kN$	**OK**

Check 3 – Resistance of web splice		
Ref	Calculations	Remark
SCI_P398	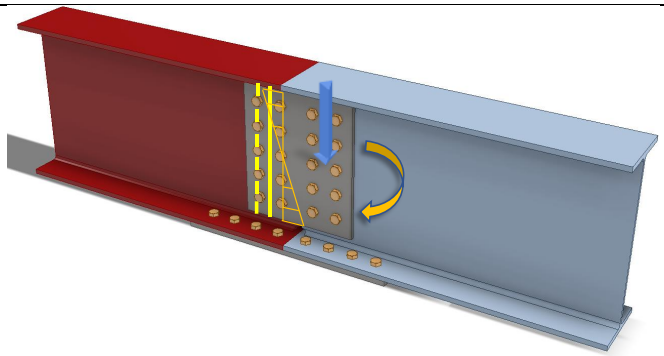 **Resistance of web cover plate:** Resistance of gross shear area: $V_{wp,g,Rd} = \frac{h_{wp}t_{wp}}{1.27}\frac{f_{y,wp}}{\sqrt{3}\gamma_{M0}}$ $= \frac{440 \times 12}{1.27} \times \frac{355}{\sqrt{3}} \times 10^{-3}$ $= 852.11kN$ Net shear area: $A_{v,wp,net} = (h_{wp} - 5d_0)t_{wp}$ $= (440 - 5 \times 22) \times 12$ $= 3960mm^2$ Resistance of the net area: $V_{wp,net,Rd} = \frac{A_{v,wp,net}\left(\frac{f_{up}}{\sqrt{3}}\right)}{\gamma_{M2}}$ $= \frac{3960 \times \frac{510}{\sqrt{3}}}{1.25} \times 10^{-3}$ $= 932.81kN$ Shear resistance of the web cover plate: $V_{wp,Rd} = \min(V_{v,wp,Rd}; V_{wp,net,Rd})$ $= \min(852.11; 9322.81)$ $= 852.11kN > V_{Ed} = 100kN$	**OK**

Check 3 – Resistance of web splice		
Ref	Calculations	Remark
	Elastic modulus of cover plate: $W_{wp} = \frac{t_{wp}h_{wp}^2}{6}$ $= \frac{12 \times 440^2}{6}$ $= 387200mm^3$ As $V_{Ed} < V_{wp,Rd}/2$, it is not necessary to apply the reduction factor to the bending moment resistance. Bending resistance of web cover plate: $M_{c,wp,Rd} = \frac{W_{wp}(1-\rho)f_{yp}}{\gamma_{M0}}$ $= \frac{387200 \times 355}{1.0} \times 10^{-6}$ $= 137.46kNm > (M_{w,M} + M_{ecc}) = 28.78kNm$ **Resistance of beam web:** Gross shear area (weld access hole size 15mm): $A_g = A_b - 2bt_f + \frac{(t_w + 2r)t_f}{2} - 15t_w$ $= 11700 - 2 \times 209.3 \times 15.6 + (10.1 + 2 \times 12.7) \times 15.6 \times 0.5 - 15 \times 10.1$ $= 5295.24mm^2$ Resistance of gross section: $V_{w,g,Rd} = \frac{A_g f_y}{\sqrt{3}\gamma_{M0}}$ $= 5295.24 \times \frac{355}{\sqrt{3}} \times 10^{-3}$ $= 1085.31kN$	**OK**

Check 3 – Resistance of web splice		
Ref	Calculations	Remark
	Net shear area: $A_{net} = A_g - 5d_0t_w$ $= 5295.24 - 5 \times 22 \times 10.1$ $= 4184.24mm^2$ Resistance of net section: $V_{w,net,Rd} = \frac{A_{net}\left(\frac{f_u}{\sqrt{3}}\right)}{\gamma_{M2}}$ $= \frac{4184.24 \times \left(\frac{510}{\sqrt{3}}\right)}{1.25} \times 10^{-3}$ $= 985.64kN$ Shear resistance of the beam web: $V_{w,Rd} = \min(V_{w,g,Rd}; V_{w,net,Rd})$ $= \min(1085.31; 985.64)$ $= 985.64kN > V_{Ed} = 100kN$	**OK**

2.6.2 Example 25 – Beam splice – A combination of welding to the top & bottom flanges with bolting to the web

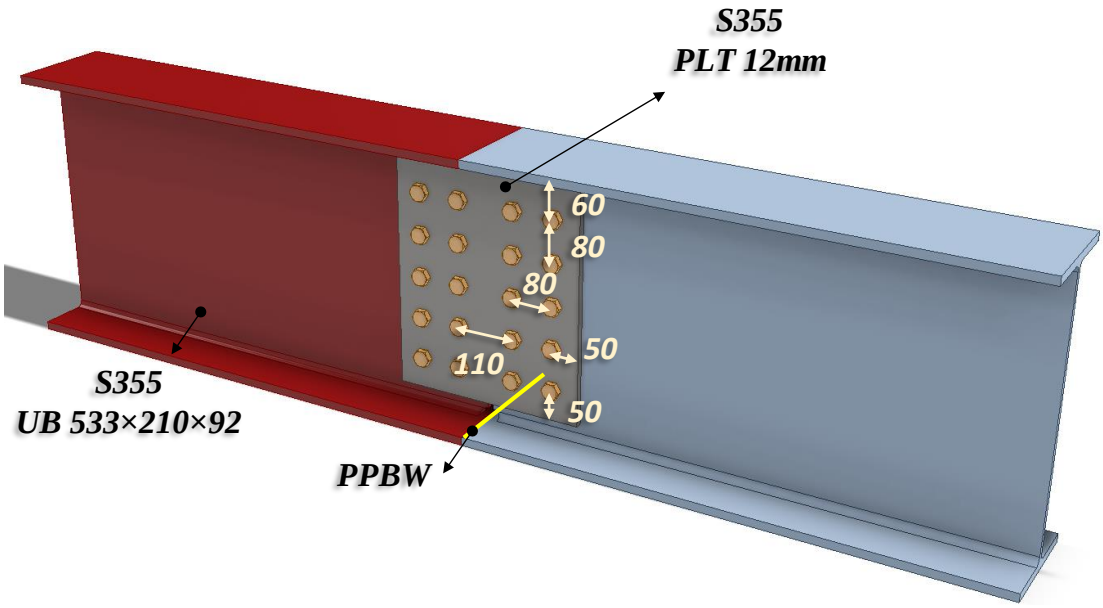

Check – Partial penetration butt weld resistance		
Ref	Calculations	Remark
SS EN1993-1-8	The force in flanges due to moment: $F_{f,M} = \left(1 - \frac{I_w}{I_y}\right)\left(\frac{M_{Ed}}{h_b - t_f}\right)$ $= \left(1 - \frac{10641.23}{55200}\right) \times \left(\frac{100}{533.1 - 15.6}\right) \times 10^3$ $= 155.99kN$ Applied transverse stress on PPBW: $\tau_{T,Ed} = \frac{F_{f,M}}{b}$ $= \frac{155.99}{209.3}$ $= 0.75kN/mm$ Choose partial penetration butt weld with 4.2mm throat thickness and grade S275: Longitudinal resistance: $F_{w,L,Rd} = 0.94kN/mm$ Transverse resistance: $F_{w,T,Rd} = 1.15kN/mm$ ∴ The butt weld resistance in bottom flange is adequate to resist reverse moment due to wind and seismic effects	*Distribution of forces same as 2.6.1

Check – Shear resistance of beam web		
Ref	Calculations	Remark
SS EN1993-1-8	Gross shear area (weld access hole size 15mm): $A_g = A_b - 2bt_f - 2 \times 15t_w$ $= 11700 - 2 \times 209.3 \times 15.6 - 2 \times 15 \times 10.1$ $= 4866.84mm^2$ Resistance of gross section: $V_{w,g,Rd} = \frac{A_g f_y}{\sqrt{3}\gamma_{M0}}$ $= 4866.84 \times \frac{355}{\sqrt{3}} \times 10^{-3}$ $= 997.50kN$ Net shear area: $A_{net} = A_g - 5d_0 t_w$ $= 4866.84 - 5 \times 22 \times 10.1$ $= 3755.84mm^2$ Resistance of net section: $V_{w,net,Rd} = \frac{A_{net}\left(\frac{f_u}{\sqrt{3}}\right)}{\gamma_{M2}}$ $= \frac{3755.84 \times \left(\frac{510}{\sqrt{3}}\right)}{1.25} \times 10^{-3}$ $= 884.72kN$ Shear resistance of the beam web: $V_{w,Rd} = \min(V_{w,g,Rd}; V_{w,net,Rd})$ $= \min(997.50; 884.72)$ $= 884.72kN > V_{Ed} = 100kN$	**OK**

3 Base Plate Connections

3.1 Base Plate Connection

Base plate connection consists of a steel column welded to a base plate, which is ten fastened to the foundation by holding down bolts anchored into the foundation. The foundation in this context can be a pile cap, reinforced concrete (RC) beam, RC wall, RC column or RC slab. The base plate should have sufficient size and thickness to transfer the compressive/tensile, shear force and bending moment from the steel section to the substrate based on bearing resistance of the concrete. The compression force is spread over an effective area of the base plate in contact with the concrete. As for tension due to axial force and/or moments, the tension force is resisted by the holding down bolts anchored into the concrete. The base plate should be able to resist the tensile stress arising from the axial force and/or bending moment. Horizontal shear force should be resisted by the friction between the base plate and the foundation or by the shear capacity of the bolts.

One of the important aspects of base plate connection to ensure buildability is the anchorage length of the holding down bolt. Often, the size of the concrete substrate is not big enough to fit the holding down bolts due to the anchorage length. The use of full tension anchorage based on the bond strength between the concrete and the holding down bolts will result into a longer anchorage length. Instead, the concrete cone pull-out capacity can be adopted to derive the anchorage length needed (h_{ef}) as shown in Figure *3-1*.

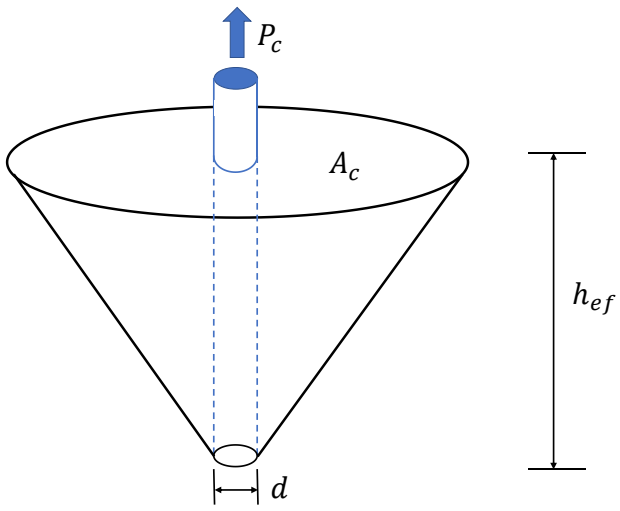

Figure 3-1 Concrete cone pull-out capacity

3.2 Design steps

Five design steps that require attention from designers are:

- Step 1 – Find the effective area (A_e) needed for the base plate to be in contact with the concrete due to the compression force and/or bending moment. The effective area should be checked to ensure that the bearing resistance of the concrete is not exceeded.
- Step 2 – Find the minimum base plate thickness based on the minimum projection of the steel plate required from the outer edge of the column based on the effective area derived from Step 1.
- Step 3 – Check the weld capacity to resist the shear and axial forces.
- Step 4 – Check the anchor bolt resistance in terms of tensile, bearing and shear capacities.

- Step 5 – Check the anchorage length of the holding down bolt required based on the conical cone pull-out capacity.

The design calculations of the worked examples shown in this chapter are focused only on the derivation of the anchorage length. The rest of the design steps are well documented in CEB design guide "Design of fastenings in concrete" and SCI P398 "Joints in steel construction: Moment-resisting joints to Eurocode 3".

3.3 Design basics

The anchorage length design is based on SS EN1992-1-1 and relevant clauses and table in the code are referred.

Ultimate bond stress between ribbed bars and concrete (8.4.2 (2)):

$f_{bd} = 2.25\eta_1\eta_2 f_{ctd}$

where

η_1: coefficient related to the quality of the bond condition; 1.0 for 'good' conditions and 0.7 for all other cases

η_2: coefficient related to bar diameter; 1.0 for bar diameter less than 32mm and

$\eta_2 = (132 - \emptyset)/100$ for bar diameter greater than 32mm

f_{ctd}: design value of concrete tensile strength, can be calculated from 3.1.6 (2)P

Basic required anchorage length (8.4.3):

$l_{b,rqd} = (\emptyset/4)(\sigma_{sd}/f_{bd})$

where

σ_{sd}: design stress of the bar

Design anchorage length (8.4.4):

$l_{bd} = \alpha_1\alpha_2 l_{b,rqd} \geq l_{b,min}$

where

α_1: coefficient related to form of bars assuming adequate cover (Table 8.2)

α_2: coefficient related to concrete minimum cover (Table 8.2)

$l_{b,min}$: minimum anchorage length

$l_{b,min} \geq \max\,(0.6l_{b,rqd}; 10\emptyset; 100mm)$

In this case, only two coefficients are considered for design anchorage length. This is because the remaining three coefficients are mainly for transverse reinforcements which is applicable to RC structures.

Shear force may be transferred from base plate to concrete foundation in three ways:

(1) Through friction force between steel base plate and concrete. The shear resistance may be assumed to be 30% of the total compression force.
(2) By holding down bolts. The bearing resistance between bolts and base plate and between the bolts and concrete foundation/grouting.
(3) By directly transferred from base plate to concrete foundation. This may be achieved either by installing tie bars, setting the base plate in a pocket which is filled with concrete or providing a shear key welded to the base plate.

In base plate connection, if the friction alone is sufficient to transfer the shear force, shear resistance of other components of the connection may not need to be checked. When friction alone is insufficient, the shear force may be assumed to be transferred via holding down bolts. As the bolts are in clearance holes, not all bolts are in contact with the plate. As a result, the shear force may not be assumed to be shared equally among the bolts. This can be overcome by providing washer plates with precise holes and site welded to the base plate. Moreover, in the event where there is an eccentricity between the shear force and the centre of gravity of the bolt group, the bolts need to be checked against the additional shear force due to the eccentric moment. In the case that the shear force acts on the bolts with a level arm, the bending moment will severely reduce the shear resistance of the bolts. Shear loads acting on the hold-down bolts may be assumed to act without a level arm if both of the following conditions are fulfilled (CEB design guide 4.2.1.3):

(1) The fixture must be made of metal and in the area of the anchorage be fixed directly to the concrete foundation without an intermediate layer or with a levelling layer of mortar with a thickness less than 3mm.
(2) The fixture must be adjacent to the anchor over its entire thickness.

In addition to the two conditions stated above, the entire grouting operation needs to be undertaken with care, including proper preparation of the base, cleanliness, mixing and careful placing of grout. In the case that non-shrink structural grout with strength at least equal to that of concrete foundation is used between the base plate and foundation and the hold-down bolts have enough end space (at least 6d in the load direction), zero level arm length may be assumed.

When the shear force is too high to be transferred by friction or by the holding down bolts, the base plate connection may be designed to transfer the significant shears directly to the concrete foundation as mentioned above. Qualified person needs to access the suitability of all assumptions made in design base on site conditions.

3.4 Typical Column Base Plate

For column base plate connections, two types of hold down bolts are commonly used:

(a) L-bolt and/or J-bolt; and
(b) Vertical holding down bolt with nuts and washers.

3.4.1 Example 1 – Use of L-Bolt

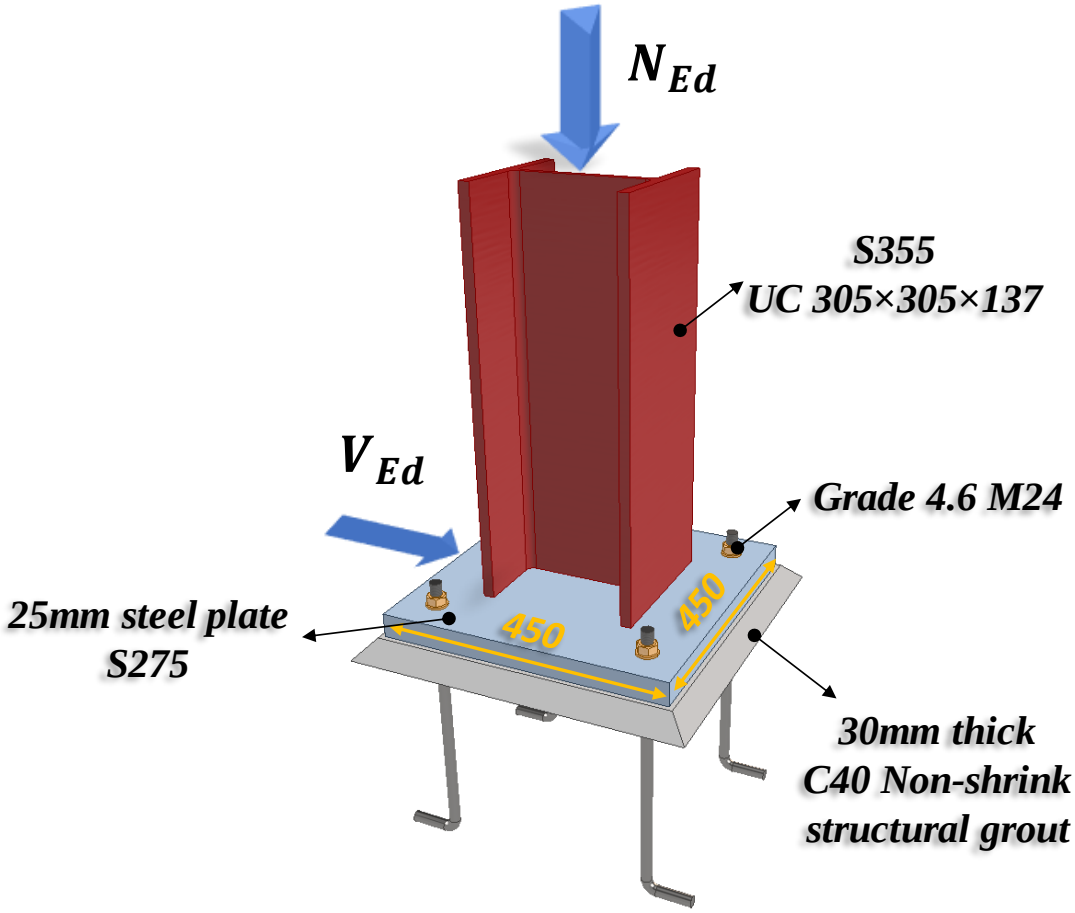

Design loading:

Axial compression force: $N_{Ed} = 2000kN$

Shear force: $V_{Ed} = 500kN$

Check 1 – Required area		
Ref	Calculations	Remark
SCI_P358	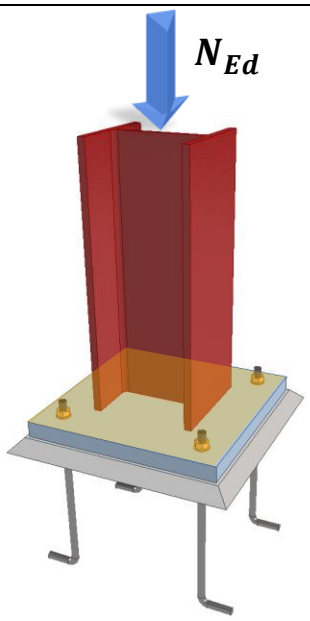 Design compressive strength of the concrete: $f_{cd} = \frac{\alpha_{cc} f_{ck}}{\gamma_c}$ $= 0.85 \times \frac{40}{1.5}$ $= 22.67MPa$ Assume $\beta_j = 2/3$, this is reasonable as the grout thickness is 30mm < 50mm and the grout strength is assumed to be same as the concrete foundation. Assume $\alpha = 1.5$, the dimensions of foundation in this example is unknown. Design bearing resistance of concrete: $f_{jd} = \beta_j \alpha f_{cd}$ $= \frac{2}{3} \times 1.5 \times 17$ $= 22.67MPa$ Required bearing area: $A_{req} = \frac{N_{Ed}}{f_{jd}} = \frac{2000}{22.67} \times 10^3 = 88235mm^2$	Concrete characteristic strength: $f_{ck} = 40MPa$ $\alpha_{cc} = 0.85$

Check 1 – Required area		
Ref	Calculations	Remark
	Area of base plate: $A_p = b_p h_p = 450^2 = 202500 mm^2 > A_{req}$	OK

Check 2 – Effective area		
Ref	Calculations	Remark
SCI_P358	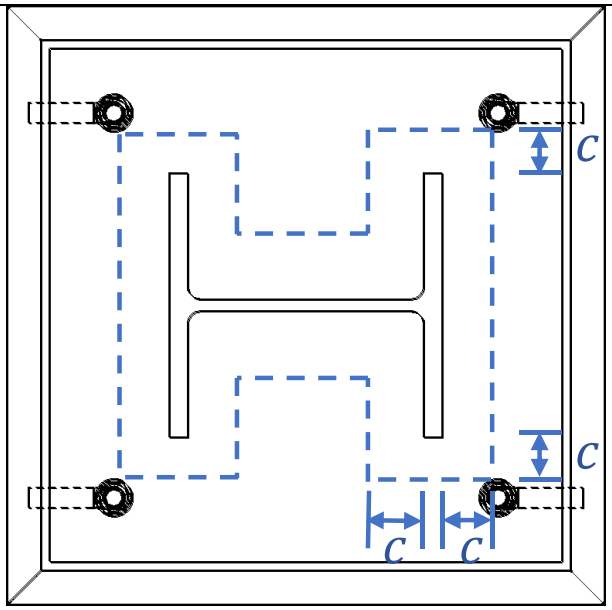 Assume there is no overlap among the projection width of the column: For UC section: $A_{eff} = 4c^2 + P_{col}c + A_{col}$ $= A_{req} = 88235mm^2$ $\therefore c = 36mm$ For UC, $\frac{h - 2t_f}{2} = \frac{309.2 - 2 \times 21.7}{2} = 138.55mm > c$ $\therefore$ the assumption that there is no overlap is valid.	Perimeter of column (UC305x305x137): $P_{col} = 1824.10mm$ $A_{col} = 17400mm^2$

Check 3 – Plate thickness		
Ref	Calculations	Remark
SCI_P358	Minimum thickness of base plate: $t_{min} = c\sqrt{\frac{3f_{jd}\gamma_{M0}}{f_{yp}}}$ $= 36 \times \sqrt{\frac{3 \times 17 \times 1.0}{265}}$ $= 18.23mm$ ∴ thickness of base plate: $t_p = 25mm > t_{min}$	Yield strength of plate: $f_{yp} = 265MPa$ (plate thickness is assumed to be between 16mm and 40mm)

Check 4 – Weld resistance		
Ref	Calculations	Remark
	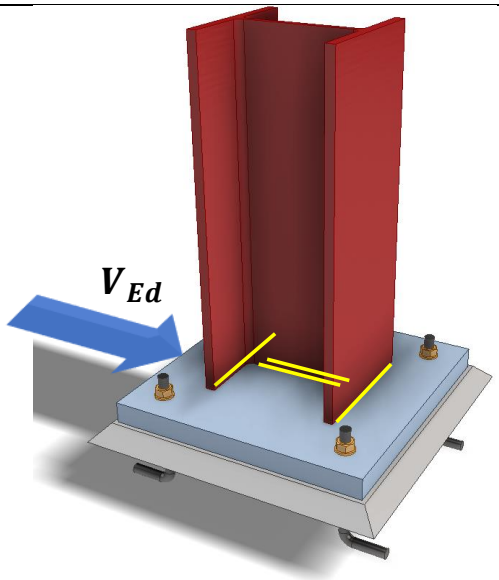	
SCI_P358 SS EN1993-1-8	Assume S275 fillet weld with leg length 6mm and throat thickness 4.2mm is used to connect column and base plate. Design shear strength of the fillet weld: $f_{vw,d} = \frac{f_u/\sqrt{3}}{\beta_w \gamma_{M2}}$ $= \frac{410/\sqrt{3}}{0.85 \times 1.25}$ $= 222.79MPa$ Length of fillet weld in web: $L_{w,w} = 2(d - 2s)$ $= 2 \times (246.7 - 2 \times 6)$ $= 469.4mm$ Shear resistance of fillet weld in web: $V_{Rd,w} = L_{w,w} f_{vw,d} a$ $= 469.4 \times 222.79 \times 4.2 \times 10^{-3}$ $= 439.22kN$	For S275 fillet weld: $f_u = 410MPa$ $\beta_w = 0.85$ $\gamma_{M2} = 1.25$ For UC305x305x137: Distance between fillets: $d = 246.7mm$ Width of flange: $b = 309.2mm$ Web thickness: $t_w = 13.8mm$ Root radius: $r = 15.2mm$

Check 4 – Weld resistance		
Ref	Calculations	Remark
	Length of fillet weld in flanges: $L_{w,f} = 2(b - 2s + b - t_w - 2r - 4s)$ $= 2 \times (309.2 - 2 \times 6 + 309.2 - 13.8 - 2 \times 15.2 - 4 \times 6)$ $= 1076.4mm$ Shear resistance of fillet weld in flanges: $V_{Rd,f} = KL_{w,f} f_{vw,d} a$ $= 1.225 \times 1076.4 \times 222.79 \times 4.2 \times 10^{-3}$ $= 1233.83kN$ Shear resistance of welds between column and base plate: $V_{Rd} = V_{Rd,w} + V_{Rd,f}$ $= 439.22 + 1233.83$ $= 1673.05kN > V_{Ed} = 500kN$	As the column flange and plate are at 90°: $K = 1.225$

Check 5 – Anchorage length of hook		
Ref	Calculations	Remark
	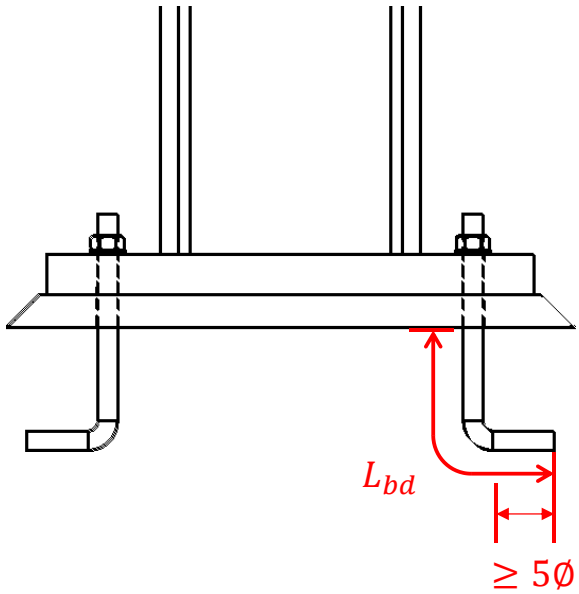	
SS EN1993-1-8 SS EN1992-1-1, 8.4.2	According to SS EN1993-1-8 Clause 6.2.6.12 (5), the anchorage length of the bolt with hooked end should be able to prevent bond failure before yielding of the bolt. Hook type of anchorage should not be used for bolts with yield strength f_{yb} greater than $300N/mm^2$. In this example, the bond properties of the anchor bolts is assumed to be same as ribbed bars. Ultimate anchorage bond stress for ribbed bars: $f_{bd} = 2.25\eta_1\eta_2 f_{ctd} = 1.5 f_{ctk,0.05} = 0.315 f_{ck}^{2/3}$ $= 0.315 \times 40^{2/3}$ $= 3.68MPa$ Basic anchorage length: $l_{b.rqd} = \frac{f_s}{4f_{bd}}\emptyset$ $= \frac{240}{4 \times 3.68} \times 24$ $= 390.85mm$ Coefficients:	For grade 4.6 M24 bolts: Yield strength: $f_{yd} = 240MPa$ Diameter of bolt: $\emptyset = 24mm$

Check 5 – Anchorage length of hook		
Ref	Calculations	Remark
	Shape of anchor bar: $\alpha_1 = 0.7$, assume edge distance is greater than three times of the dimeter Concrete cover to anchor bar: $\alpha_2 = 0.7$, assume concrete cover is much larger than three times of the dimeter Design anchorage length: $l_{bd} = l_{b,rqd}\alpha_1\alpha_2$ $= 390.85 \times 0.7 \times 0.7$ $= 191.52mm$ Minimum require anchorage length: $l_{b,min} = \min\left(0.3l_{b,rqd}; 10\emptyset; 100\right)$ $= \max\ (0.3 \times 191.52; 10 \times 24; 100)$ $= 240mm > l_{bd}$ $\therefore\ l_{bd} = 240mm$	

Check 6 – Anchor bolt shear resistance		
Ref	Calculations	Remark
	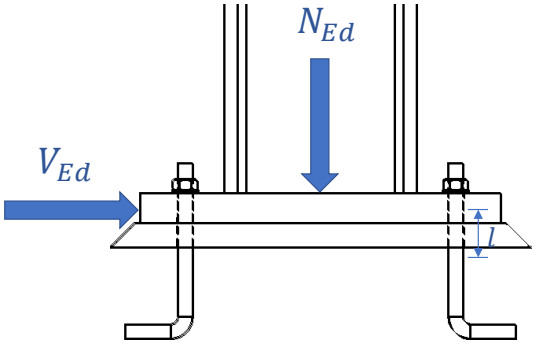	
SCI_P398	Friction between steel base plate and grouting: $V_{Rd,friction} = 0.3N_{Ed} = 0.3 \times 2000$ $= 600kN > V_{Ed} = 500kN$ In this example, friction alone is sufficient to resist the shear force. For the event where the friction alone is insufficient, following checks should be carried out for bolts group. In the case where there is an eccentricity between the shear force and the centre of gravity of the bolt group, the eccentric moment will generate additional shear force on the hold-dwon bolt. In this example, the shear force is acting at the centre of gravity of the anchor bolt group. The shear force may be assumed to be shared equally by four bolts. It is assumed that the C40 (or higher grade) non-shirnk structural grout is used between the endplate and the hold-down bolts have enough end space, zero level arm length may be assumed.	 OK Refer to section 3.2
SCI_P398	Effective bearing length: $l_{eff} = 3d = 3 \times 24 = 72mm$ Average bearing stress: $\sigma = 2f_{cd} = 2 \times 22.67 = 45.33MPa$ Concrete bearing resistance: $V_{Rd,c} = l_{eff}\sigma d = 72 \times 45.33 \times 24 \times 10^{-3}$ $= 78.33kN$	

Check 6 – Anchor bolt shear resistance		
Ref	Calculations	Remark
CEB design guide 9.3.2.1	Shear load without level arm: Shear resistance of a anchorage bolt: $V_{Rd,s} = k_2 A_s f_{yb} / \gamma_{Ms}$ $= 0.6 \times 353 \times 240 \times 10^{-3} / 1.25$ $= 40.67kN$ Shear resistance of the bolts group: $V_{Rd} = \min\ (V_{Rd,s}; V_{Rd,c)} n$ $= \min\ (40.67; 78.33) \times 4$ $= 162.66kN$	For grade 4.6 M24 bolts: Yield strength: $f_{yd} = 240MPa$ Tensile stress area: $A_s = 353mm^2$ $k_2 = 0.6$ n: Number of bolts $\gamma_{Ms} = 1.25$
	However, if non-structural leveling mortar is used between the end plate and the concrete foundation, this grout may not contribute to the shear capacity of the bolts. In this case, the shear resistance of the bolt may be calculated based on shear load with a level arm.	Refer to section 3.2
CEB design guide 9.3.2.2	Shear load with level arm: Elastic section modulus: $W_{el} = \frac{I}{c} = \frac{\frac{\pi r^4}{4}}{r} = \frac{\pi r^3}{4} = \pi \times \frac{12^3}{4}$ $= 1357.168mm^3$ Characteristic bending resistance of an individual bolt: $M^0_{Rk,s} = 1.5 W_{el} f_{yb}$ $= 1.5 \times 1357.168 \times 240$ $= 488580.5Nmm$	Radius of the bolt: $r = \frac{\emptyset}{2} = 12mm$ For grade 4.6 bolts: $f_{yb} = 240MPa$ $\gamma_{Ms} = 1.25$

Check 6 – Anchor bolt shear resistance		
Ref	Calculations	Remark
	Characteristic resistance of bolt: $N_{Rk,s} = A_s f_{yb} = 353 \times 240 \times 10^{-3} = 84.72kN$ $N_{Rd,s} = \frac{N_{Rk,s}}{\gamma_{Ms}} = \frac{84.72}{1.25} = 67.776kN$ Assume applied tensile force on bolt: $N_{sd} = 20kN$ $M_{Rk,s} = M^0_{Rk,s}(1 - \frac{N_{sd}}{N_{Rd,s}})$ $= 488580.5 \times \left(1 - \frac{20}{67.776}\right)$ $= 344405.4Nmm$ Assume there is no restraint to the bending of the bolt: $\alpha_M = 1.0$ Level arm: $l = 0.5d + e_1$ $= 0.5 \times 24 + 42.5$ $= 54.5mm$ Characteristic shear resistance: $V_{Rk,sm} = \frac{\alpha_M M_{Rk,s}}{l}$ $= \frac{1.0 \times 344405.4}{54.5} \times 10^{-3}$ $= 6.32kN$ Shear resistance of an anchor bolt: $V_{Rd,s} = \frac{V_{Rk,sm}}{\gamma_{Ms}} = \frac{4.58}{1.2} = 5.06kN$	Distance between shear load and concrete surface: $e_1 = t_{grout} + 0.5t_{bp}$ $= 30 + \frac{25}{2}$ $= 42.5mm$

Check 6 – Anchor bolt shear resistance		
Ref	Calculations	Remark
	Shear resistance of bolts group: $V_{Rd} = V_{Rds}n = 5.06 \times 4 = 20.24kN$ It can be observed that the shear resistance is significantly reduced based on shear load with a level arm.	

3.4.2 Example 2 – Vertical holding down bolt with nuts and washers

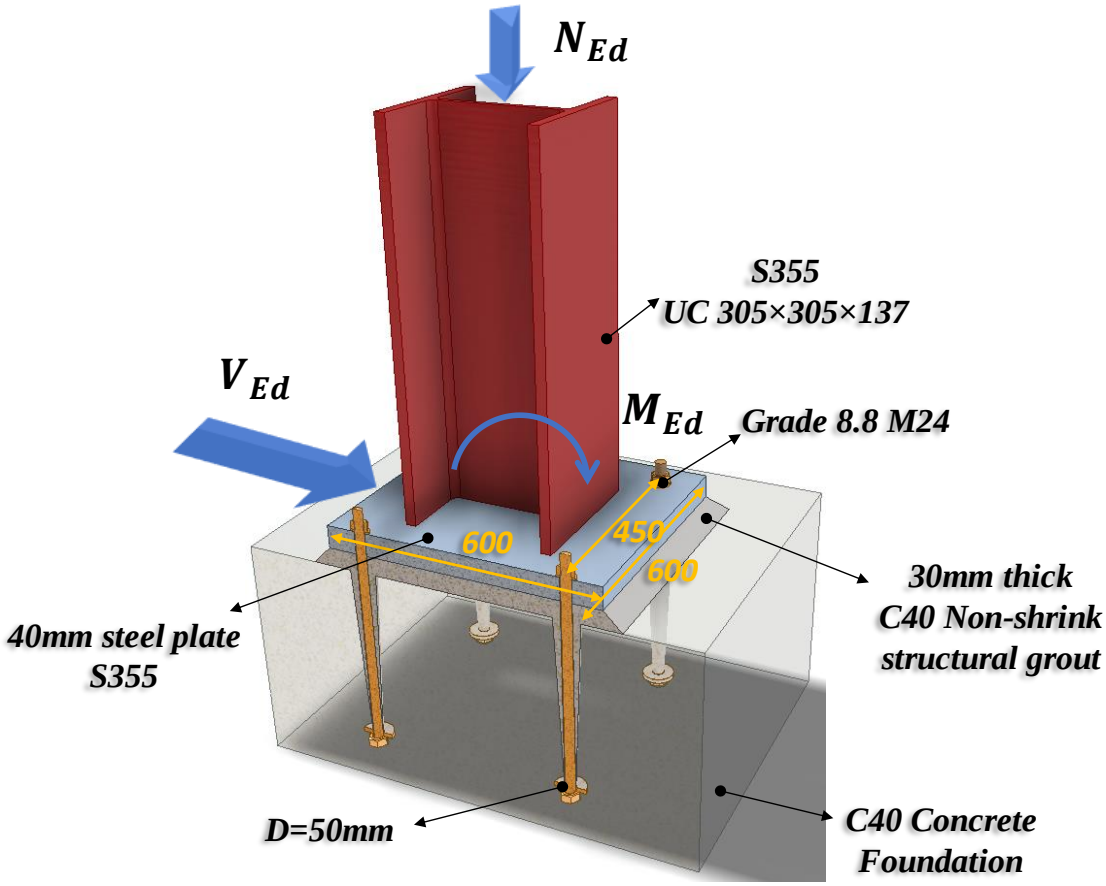

Design loading:

Axial compression: $N_{Ed} = 1500kN$

Shear force: $V_{Ed} = 100kN$

Bending moment: $M_{Ed} = 200kNm$

Distribution of forces at the column base		
Ref	Calculations	Remark
	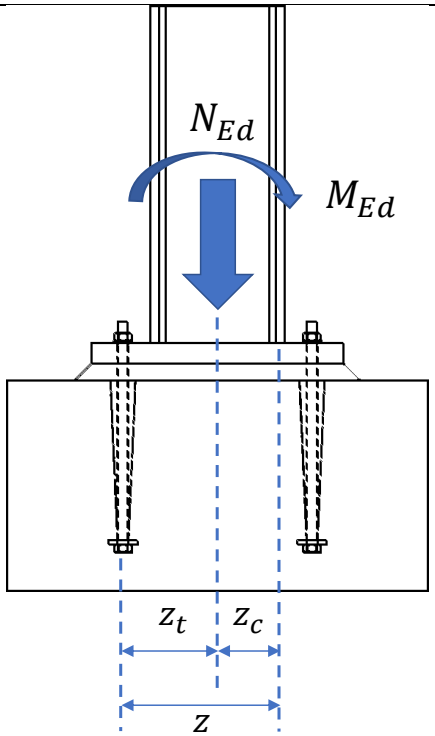	
SCI_P398	Forces in column flanges: Forces at column flange centroids, due to moment: $N_{f,M} = \frac{M_{Ed}}{h - t_f}$ $= \frac{200}{320.5 - 21.7} \times 10^3$ $= 669.34kN$ Forces due to axial forces: $N_{f,N} = \frac{N_{Ed}}{2} = \frac{1500}{2} = 750kN$ Total forces (compression part): $N_f = N_{f,M} + N_{f,N}$ $= 669.34 + 750$ $= 1419.34kN$	For UC305x305x137: Depth: $h = 320.5mm$ Flange thickness: $t_f = 21.7mm$

Distribution of forces at the column base		
Ref	Calculations	Remark
	Forces in T-stubs of base plate: Level arm for tension: $z_t = \frac{h_p - 2e}{2} = \frac{450}{2} = 225mm$ Level arm for compression: $z_c = \frac{h - t_f}{2} = \frac{320.5 - 21.7}{2} = 149.4mm$ Force on compression side: $N_{p,c} = \frac{M_{Ed}}{z_t + z_c} + \frac{N_{Ed} z_t}{z_t + z_c}$ $= \frac{200 \times 1000}{225 + 149.4} + \frac{1500 \times 225}{225 + 149.4}$ $= 1435.63kN$ In this example, there is no tension force at the column base.	For base plate: $b_p = 600mm$ $h_p = 600mm$ $e = 75mm$

Check 1 – Resistance of compression T-stubs		
Ref	Calculations	Remark
	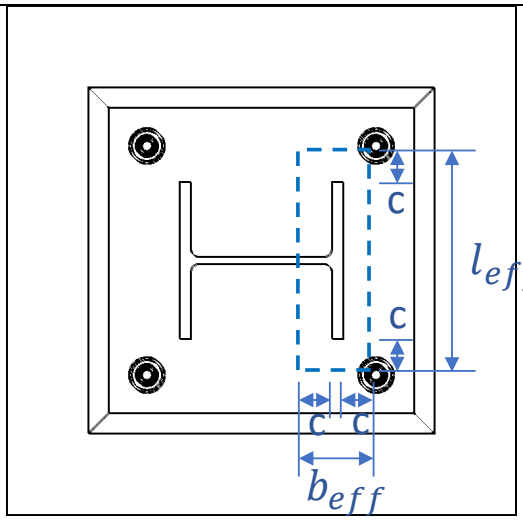	
SCI_P398	Compressive resistance of concrete below column flange: Design compressive strength of the concrete: $f_{cd} = \frac{\alpha_{cc} f_{ck}}{\gamma_c}$ $= 0.85 \times \frac{40}{1.5}$ $= 22.67MPa$ Assume $\beta_j = 2/3$, this is reasonable as the grout thickness is 30mm < 50mm and the grout strength is assumed to be same as the concrete foundation. Assume $\alpha = 1.5$, the dimensions of foundation in this example is unknown. Design bearing resistance of concrete: $f_{jd} = \beta_j \alpha f_{cd}$ $= \frac{2}{3} \times 1.5 \times 22.67$ $= 22.67MPa$	Concrete characteristic strength: $f_{ck} = 40MPa$ $\alpha_{cc} = 0.85$

Check 1 – Resistance of compression T-stubs		
Ref	Calculations	Remark
	Additional bearing width: $c = t_{bp}\sqrt{\frac{f_{y,bp}}{3f_{jd}\gamma_{M0}}}$ $= 40 \times \sqrt{\frac{335}{3 \times 22.67 \times 1.0}}$ $= 88.78mm$ $b_{eff} = 2c + t_f$ $= 2 \times 88.78 + 21.7$ $= 199.27mm$ $l_{eff} = 2c + b_c$ $= 2 \times 88.78 + 309.2$ $= 486.77mm$ Effective bearing area: $A_{eff} = b_{eff}l_{eff}$ $= 199.27 \times 486.77$ $= 96995mm^2$ Compression resistance of the foundation: $F_{c,pl,Rd} = A_{eff}f_{jd}$ $= 96995 \times 22.67 \times 10^{-3}$ $= 2198.56kN > N_{p,c} = 1435.63kN$	For base plate: $t_{bp} = 40mm$ $f_{y,bp} = 335MPa$ OK

Check 1 – Resistance of compression T-stubs		
Ref	Calculations	Remark
	Resistance of the column flange: $F_{c,fc,Rd} = \frac{M_{c,Rd}}{h - t_f}$ $= \frac{792}{320.5 - 21.7} \times 10^3$ $= 2650.60kN > N_f = 1419.34kN$	From SCI P363: For S355 UC 305x305x137: $M_{c,Rd} = 792kNm$ OK

Check 2 – Resistance of tension T-stubs		
Ref	Calculations	Remark
	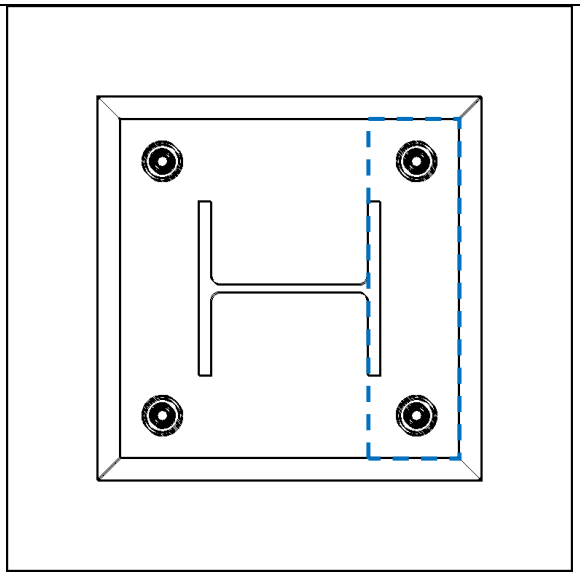	
SCI_P398	Effective length of T-stubs: Circular patterns: Individual circular yielding: $l_{eff,cp} = 2\pi m_x = 2\pi \times 56.75 = 356.57mm$ Individual end yielding: $l_{eff,cp} = \pi m_x + 2e = \pi \times 56.75 + 2 \times 75$ $= 328.29mm$ Non-circular patterns: Single curvature: $l_{eff,nc} = \frac{b_p}{2} = \frac{600}{2} = 300mm$ Individual end yielding: $l_{eff,nc} = 4m_x + 1.25e$ $= 4 \times 56.75 + 1.25 \times 75$ $= 320.75mm$ Corner yielding of outer bolts, individual yielding between: $l_{eff,nc} = 2m_x + 0.625e + e$ $= 2 \times 56.75 + 0.625 \times 75 + 75$ $= 235.38mm$	$e = 75mm$ $m = m_x$ $= \frac{(h_p - h)}{2} - e - s_f$ $= \frac{600 - 320.5}{2} - 75 - 8$ $= 56.75mm$ $w = 450mm$

Check 2 – Resistance of tension T-stubs		
Ref	Calculations	Remark
	Group end yielding: $l_{eff,nc} = 2m_x + 0.625e + \frac{w}{2}$ $= 2 \times 56.75 + 0.625 \times 75 + \frac{450}{2}$ $= 385.375mm$ $l_{eff} = \min(l_{eff,cp}; l_{eff,nc})$ $= 235.38mm$ $M_{pl,1,Rd} = \frac{0.25\Sigma l_{eff,1} t_{bp}^2 f_{y,bp}}{\gamma_{M0}}$ $= \frac{0.25 \times 235.38 \times 40^2 \times 335}{1.0}$ $= 31540250Nmm$ Resistance of mode 1 and 2: $F_{T,1-2,Rd} = \frac{2M_{pl,1,Rd}}{m}$ $= \frac{2 \times 31540250}{56.75} \times 10^3$ $= 1111.55kN$	

Check 3 – Tension resistance of anchor bolt		
Ref	Calculations	Remark
	In this example, there is no tension force acting on the column base. However, the following checks may be performed in the case where tension force is acting on the column base. 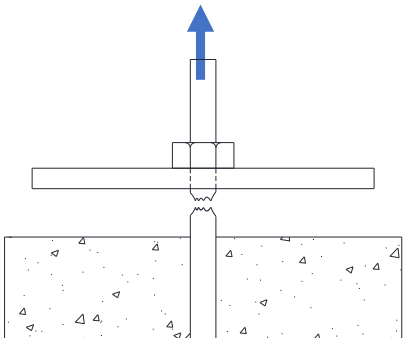 ***Steel failure***	
SS EN1993-1-8 Table 3.4	Steel failure: $F_{t,Rd} = \frac{k_2 f_{ub} A_s}{\gamma_{M2}}$ $= \frac{0.9 \times 800 \times 353}{1.25} \times 10^{-3}$ $= 203kN$	For grade 8.8 M24 bolts: $k_2 = 0.9$ $f_{ub} = 800MPa$ $A_s = 353mm^2$
	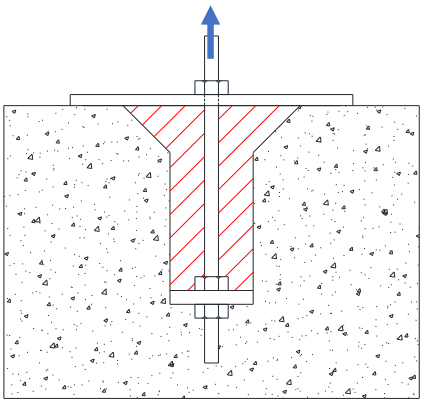 ***Pull out failure***	
DD_CEN_TS_1992-4-2-2009	Pull-out failure: Pull out failure is characterized by the crushing of the concrete above the head of the anchor followed by the formation of a concrete failure cone as the head of the anchor approaches the concrete surface, as shown in the above figure.	Diameter of anchor plate: $d_p = 50mm$ Diameter of bolt: $d = 24mm$

Check 3 – Tension resistance of anchor bolt		
Ref	Calculations	Remark
CEB design guide (1996): Design of fastenings in concrete	Load bearing area of anchor plate: $A_h = \frac{\pi}{4}\left(d_p^2 - d^2\right)$ $= \frac{\pi}{4}(50^2 - 24^2)$ $= 1511.11mm^2$ $N_{Rk,p} = 6A_h f_{ck,cube}\psi_{ucr,N}$ $= 6 \times 1511.11 \times 50 \times 1.4 \times 10^{-3}$ $= 634.66kN$ $\gamma_2 = 1.25$ $\gamma_{Mp} = 1.5\gamma_2 = 1.875$ $N_{Rd,p} = \frac{N_{Rk,p}}{\gamma_{Mp}} = \frac{634.66}{1.875} = 338.49kN$ 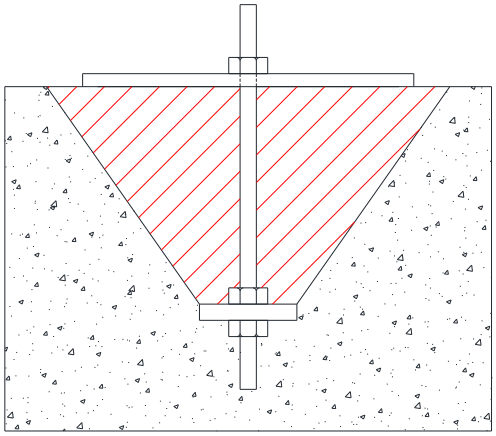 ***Concrete cone failure***	Characteristic cube strength of concrete: $f_{ck,cube} = 50MPa$ For uncracked concrete: $\psi_{ucr,N} = 1.4$
CEB design guide (1996) Clause 9.2.4	Concrete cone failure: The characteristic resistance of a single anchor without edge and spacing effects: $N_{Rk,c}^0 = k_1 f_{ck}^{0.5} h_{ef}^{1.5}$ $= 7.5 \times 40^{0.5} \times 384^{1.5} \times 10^{-3}$ $= 356.93kN$	$k_1 = 7.5\ [\frac{N^{0.5}}{mm^{0.5}}]$ Anchorage length: $h_{ef} = 384mm$ (Assume 16 times of the diameters of the anchor bolt)

Check 3 – Tension resistance of anchor bolt		
Ref	Calculations	Remark
	Factor taking into account the geometric effects: $\psi_{A,N} = \frac{A_{c,N}}{A_{c,N}^0} = \frac{\left(S_{cr,N} + w\right)^2}{S_{cr,N}^2}$ $= \frac{(3 \times 384 + 450)^2}{(3 \times 384)^2}$ $= 1.93$ Characteristic resistance: $N_{Rk,c} = N_{Rk,c}^0 \psi_{A,N} \psi_{ucr,N}$ $= 338.49 \times 1.93 \times 1.4$ $= 966.35kN$ $\gamma_{Mc} = \gamma_{Mp} = 1.875$ $N_{Rd,c} = \frac{N_{Rk,c}}{\gamma_{Mc}} = \frac{966.35}{1.875} = 515.39kN$ Anchor plate design: Generally, anchor plate bending may not govern the failure of the connection, in this example, only punching shear failure is checked for anchor plate. The thickness of the anchor plate is designed in such a way that the bolt failure will occur before the plate is failed by punching. $\therefore \frac{\pi d t f_{y,p}}{\sqrt{3}} \geq \frac{\pi d^2}{4}\left(f_{u,b}\right)$ $t_p \geq \frac{\sqrt{3}d}{4f_{y,p}}\left(f_{u,b}\right)$ $= \frac{\sqrt{3} \times 24}{4 \times 355}(800)$ $= 23.42mm$ $\therefore t_p = 24mm$	$S_{cr,N} = 3.0h_{ef}$ Factors about influence of edges, group effect and shell spalling are not relevant in this example

Check 4 – Anchor bolt shear resistance		
Ref	Calculation	Remark
SCI_P398	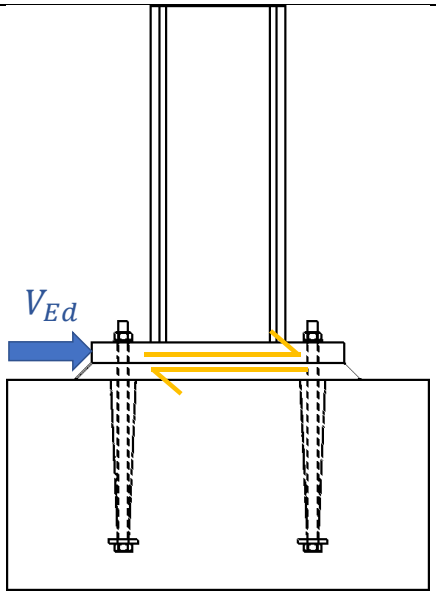 Friction between base plate and concrete: $V_{Ed} = 0.3N_{Ed} = 0.3 \times 1500$ $= 450kN > V_{Ed} = 100kN$ ∴ Friction alone is sufficient to resist the shear force	OK

3.5 Steel-to-concrete connections

For steel-to-concrete connections, the embedded plates are usually connected with bolts which are cast into the concrete walls or columns. It is not recommended to use high tensile bar for the holding down bolts where welding is required. Grade 8.8 bolts have high carbon content and thus should be discouraged where welding is adopted.

When plug weld is adopted, according to SS EN1993-1-8 Clause 4.3.5:

(1) plug weld should not be used to resist externally applied tension.
(2) Plug weld should be designed for shear only. Moreover, the thickness of plug weld should be same as that of parent material for parent material up to 16mm thick (Clause 4.3.5 (4)).
(3) When plug weld is used to connect bolt, which insert in embedded plate, the plate thickness should be at least 16mm and the plug weld thickness should not be less than 16mm and at least half the thickness of the plate.

The following example shows two possible options:

Option A – Embedded plate with the bolt welded flushed with the plate and which entailed the use of butt weld on the external face and fillet weld on the internal face of the plate.

Option B – Embedded plate with the bolt recessed from the plate with the use of plug weld on the external face and fillet weld on the internal face of the plate.

Site welding connecting steel beam to embedded plate is not suggested as it may damage concrete substrate. Option A is generally for shear connection only and it is generally applicable to small welds only. Professional engineers (PE) need to access the suitability of this connection for heavy welding. In addition, if option B was to be adopted, pull out test is to be conducted.

3.5.1 Example 3 – Embedded plate into RC wall/column

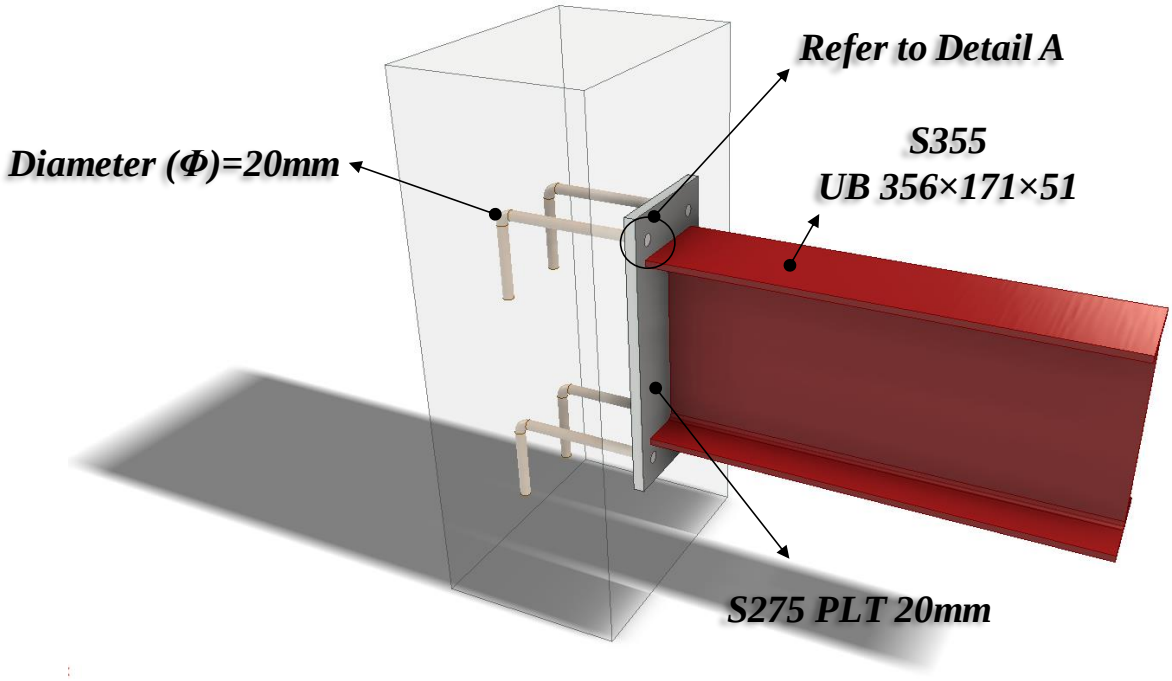

Design loading:

Normal tension force: $N_{Ed} = 50kN$

Vertical shear force: $V_{Ed} = 200kN$

Major axis bending moment: $M_{Ed} = 100kNm$

Check 1 – Fillet weld resistance		
Ref	Calculations	Remark
	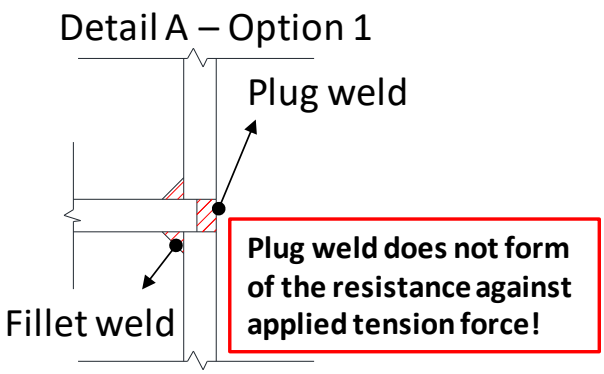	
SS EN1993-1-8	According to SS EN1993-1-8 4.3.5 (1), plug weld should not be designed to take the externally applied tension, hence the tensile force on embedded plate is taken by the fillet weld connecting the anchor bar and plate. Length of fillet weld: $L_w = \pi\emptyset = \pi \times 20 = 62.83mm$ Assume S275 fillet weld with leg length 12mm and throat thickness 8.4mm is used to connect column and base plate. Design shear strength of the fillet weld (4.5.3.3 (2)): $f_{vw,d} = \frac{f_u/\sqrt{3}}{\beta_w \gamma_{M2}}$ $= \frac{410/\sqrt{3}}{0.85 \times 1.25}$ $= 222.79MPa$ Design weld resistance, longitudinal: $F_{w,L,Rd} = f_{vw,d}a = 222.79 \times 8.4 \times 10^{-3}$ $= 1.87kN/mm$	Diameter of embedded bar: $\emptyset = 20mm$ For S275 fillet weld: $f_u = 410MPa$ $\beta_w = 0.85$ $\gamma_{M2} = 1.25$ $K = 1.225$

Check 1 – Fillet weld resistance		
Ref	Calculations	Remark
	Design weld resistance, transverse: $F_{w,T,Rd} = KF_{w,L,Rd}$ $= 1.225 \times 1.87 = 2.29kN/mm$ Tensile resistance of fillet weld: $F_{Rd} = F_{w,T,Rd}L_w = 2.29 \times 62.83 = 144.04kN$ Applied tensile force on embedded bar due to moment: $F_{Ed,M} = \frac{M_{Ed}}{2d_{cc}} = \frac{100}{2 \times 420} \times 10^3 = 119.05kN$ Assume the axial load is equally shared by 4 bolts: $F_{Ed,N} = \frac{N_{Ed}}{4} = \frac{50}{4} = 12.5kN$ Applied tensile force on embedded bar: $F_{Ed,T} = F_{Ed,M} + F_{Ed,N}$ $= 119.05 + 12.5$ $= 131.55kN < F_{Rd} = 144.04kN$	Center to center distance between rows of bolt: $d_{cc} = 420mm$ OK

Check 1a – Fillet weld and PPBW resistance		
Ref	Calculations	Remark
	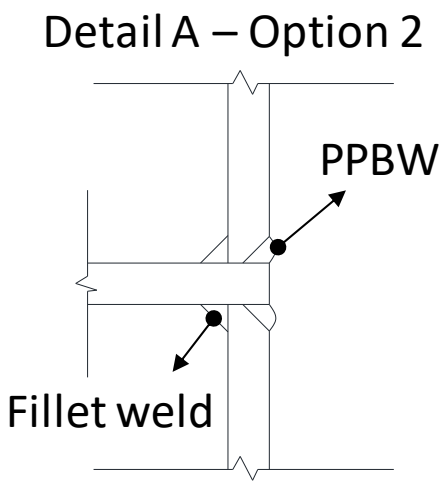 In the case that partial penetration butt weld is used together with fillet weld, the throat thickness used in calculations should be the sum of throat thicknesses of both welds. Assume S275 fillet weld with leg length 12mm and throat thickness 8.4mm and S275 partial penetration butt weld with throat thickness 10mm are used to connect column and base plate. $a = 8.4 + 10 = 18.4mm$ Design weld resistance, longitudinal: $F_{w,L,Rd} = f_{vw,d}a = 222.79 \times 18.4 \times 10^{-3}$ $= 4.10kN/mm$ Design weld resistance, transverse: $F_{w,T,Rd} = KF_{w,L,Rd}$ $= 1.225 \times 4.10 = 5.02kN/mm$ Tensile resistance of fillet weld: $F_{Rd} = F_{w,T,Rd}L_w = 5.02 \times 62.83$ $= 315.56kN > F_{Ed,T}$	

Check 2 – Plug weld shear resistance		
Ref	Calculations	Remark
SS EN1993-1-8	Design throat area (area of hole): $A_w = \frac{\pi \emptyset^2}{4} = \pi \times \frac{20^2}{4} = 314.16mm^2$ Design shear resistance of plug weld: $F_{w,Rd} = f_{vw,d} A_w$ $= 222.79 \times 314.16 \times 10^{-3}$ $= 69.99kN$ Assume shear force are equally shared by 4 bolts: $F_{Ed,V} = \frac{V_{Ed}}{4} = \frac{200}{4} = 50kN < F_{w,Rd}$	Diameter of embedded bar: $\emptyset = 20mm$

Check 3 – Anchorage length of bar		
Ref	Calculations	Remark
SS EN1992-1-1	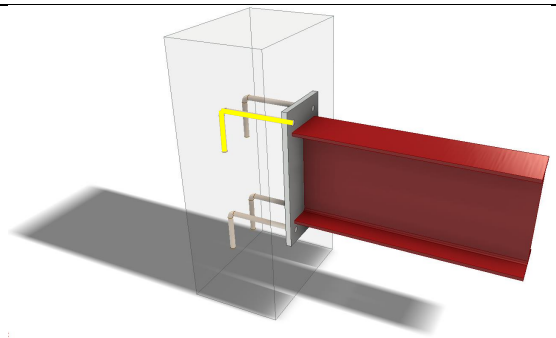 Ultimate anchorage bond stress: $f_{bd} = 1.5 f_{ctk} = 0.315 f_{ck}^{2/3}$ $= 0.315 \times 30^{2/3}$ $= 3.04MPa$ Applied tensile stress: $f_s = \frac{F_{Ed,T}}{A_w} = \frac{131.55}{314.16} \times 10^3 = 418.73MPa$	Characteristic concrete strength: $f_{ck} = 30MPa$

Check 3 – Anchorage length of bar		
Ref	Calculations	Remark
	Basic anchorage length: $l_{b.rqd} = \frac{f_s}{4f_{bd}} \emptyset$ $= \frac{418.73}{4 \times 3.04} \times 20$ $= 688.41mm$ Coefficients: Shape of anchor bar: $\alpha_1 = 0.7$, assume edge distance is greater than three times of the dimeter Concrete cover to anchor bar (non-straight): $\alpha_2 = 1 - \frac{0.15(c - 3\emptyset)}{\emptyset}$ $= 1 - 0.15 \times \frac{75 - 3 \times 20}{20}$ $= 0.8875$ Design anchorage length: $l_{bd} = l_{b,rqd}\alpha_1\alpha_2$ $= 688.41 \times 0.7 \times 0.8875$ $= 427.67mm$ Minimum require anchorage length: $l_{b,min} = \max(0.3l_{b,rqd}; 10\emptyset; 100)$ $= \max(0.3 \times 688.41; 10 \times 20; 100)$ $= 206.52mm < l_{bd}$ $\therefore l_{bd} = 430mm$ According to SS EN 1992-1-1 Clause 8, the bent length of the anchorage bar should be at least $5\emptyset$.	α: coefficient to be referred to SS EN 1992-1-1. Assume concrete cover to the anchor bar: $c = 75mm$

Alternative design using shear stud		
Ref	Calculations	Remark
	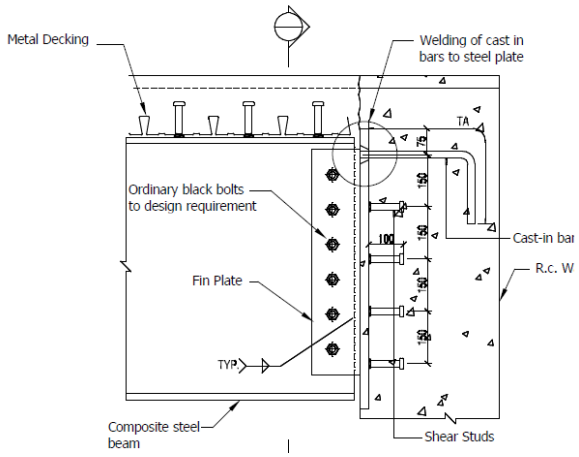 In this alternative design, applied shear force is assumed to be taken by the shear stud and the applied moment is resisted by the anchored bar. However, the distribution of force for other similar connections should be reviewed by qualified person. The design of shear studs can refer to section 2.4.1 check 8 and SS EN 1994.	

4 Connections for Hollow Steel Sections

4.1 Modes of failures

Various modes of failures are identified for hollow steel sections connections, as shown in Figure *4-1*, such as:

- Local beam flange failure (yielding, local buckling)
- Weld failure
- Lamellar tearing
- Column plastification (face, wall or cross section)
- Column punching shear
- Column local buckling
- Column shear failure

The resistance of the hollow section for different failure modes can be found in SS EN 1993-1-8 Chapter 7 and CIDECT design guide 9. The following design calculations illustrate some common designs and their resistance check.

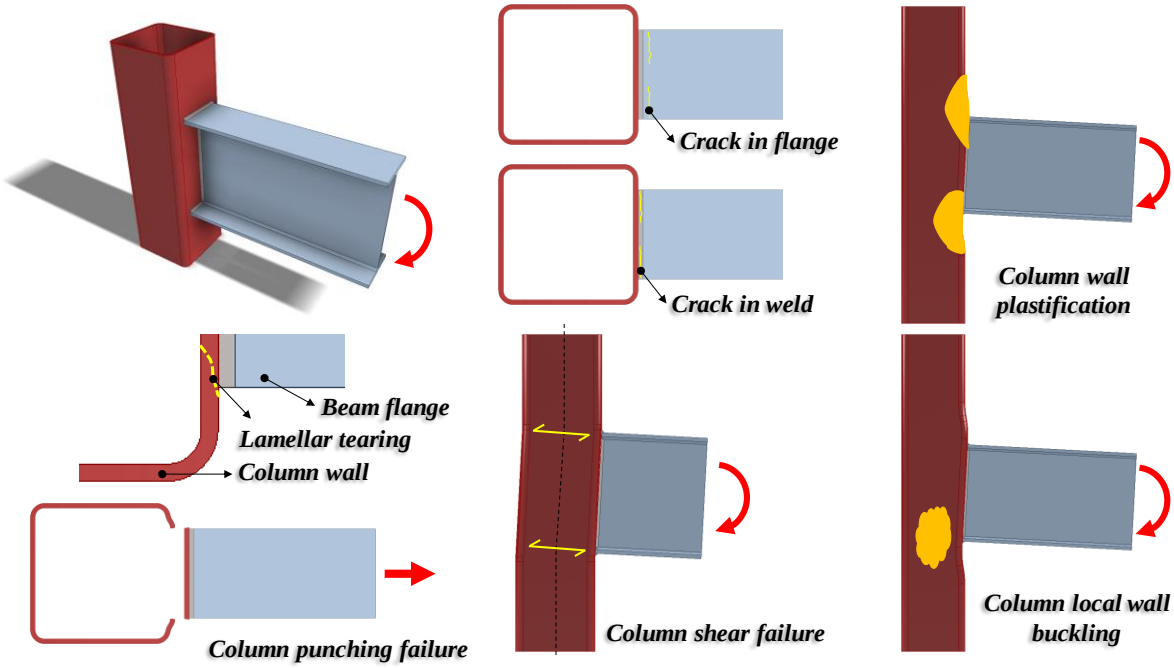

Figure 4-1 Modes of failure for I beam-to-RHS column joints

4.2 Shear connection using fin plates

Common connections involve the use of a fin plate to connect a hollow steel column to a beam (typically I or H beam). For shear connectors, a fin plate can be used with a backing plate welded to the column to avoid local failure of column flange as shown in Figure *4-2*.

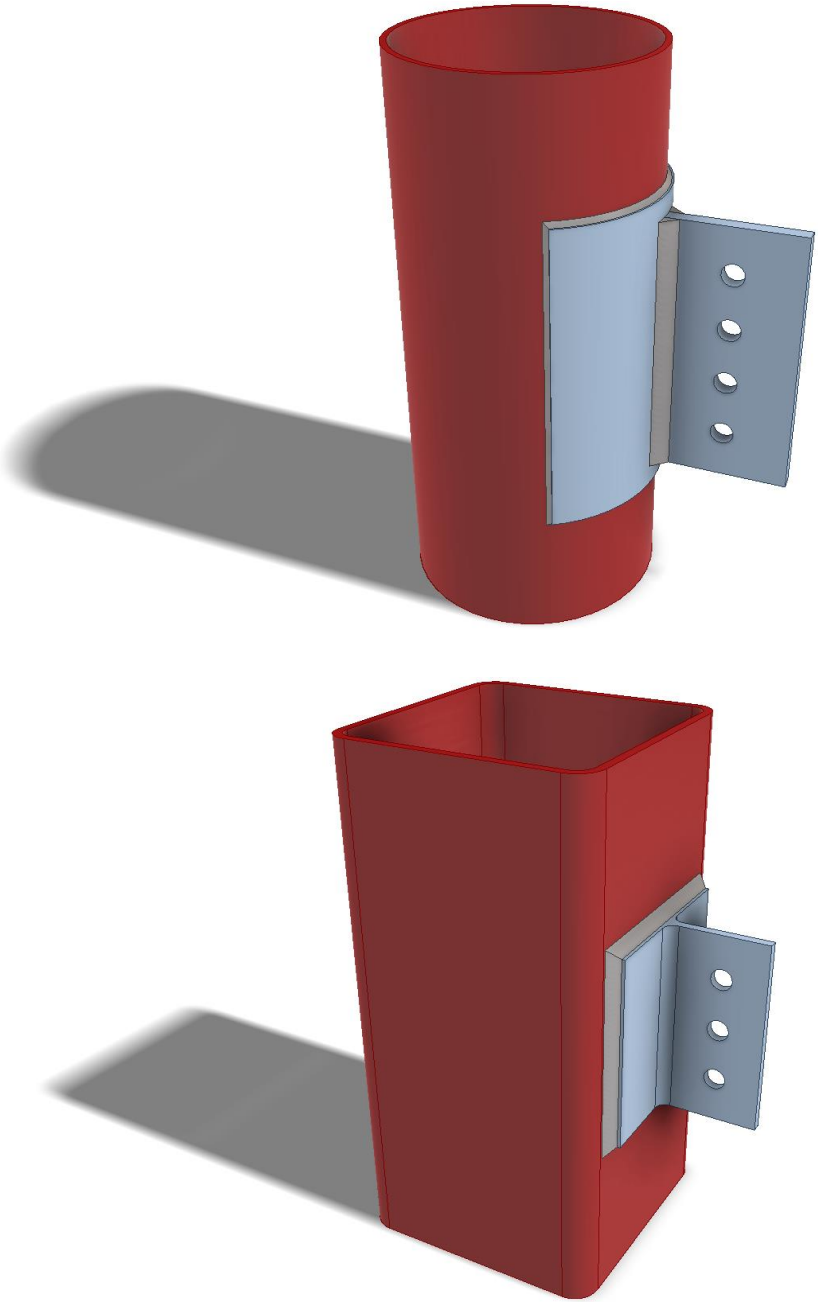

Figure 4-2 Shear connection between hollow steel column and beam

4.2.1 Example 1 – Shear connection using fin plate (CHS column)

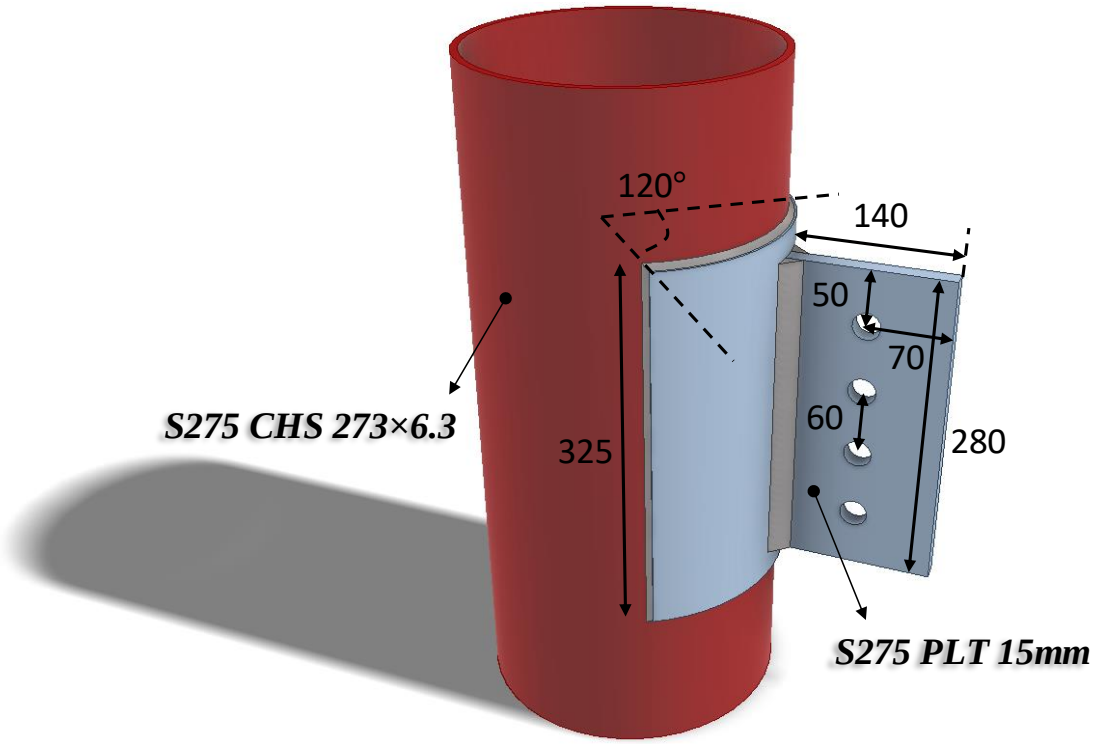

Design Loading:

Vertical shear force: $V_{Ed} = 400kN$

Check 1 – Range of validity		
Ref	Calculations	Remark
	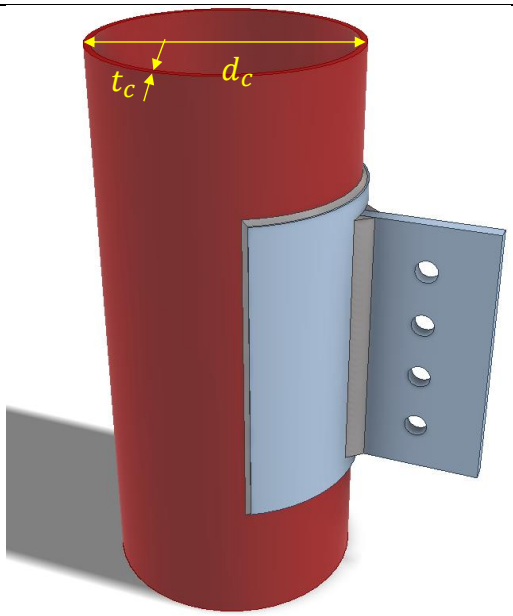	
SS EN1993-1-8	According to SS EN1993-1-8 Clause 7.4.1 (2), for welded joint between CHS members within the range of validity given in Table 7.1, only chord face failure and punching shear need to be considered. Assume the CHS is under compression load: $\frac{d_c}{t_c} = \frac{273}{6.3} = 43.33$ $10 < d_c/t_c = 43.33 < 50$ ∴ Only chord face failure and punching shear need to be checked.	For CHS 273x6.3: Diameter: $d_c = 273mm$ Thickness: $t_c = 6.3mm$ Yield strength: $f_{c,y} = 275MPa$ Youngs modulus: $E = 210000MPa$ OK
AISC, 1997: Hollow structural sections connections manual CIDECT design guide 9	According to CIDECT design guide 9 and AISC manual, for CHS, single shear plate connection would be permitted if CHS is not "slender". $\frac{d_c}{t_c} = 43.33 < \frac{0.114E}{f_{c,y}} = 0.114 \times \frac{210000}{275} = 87$	OK

Check 2 – Fin plate resistance		
Ref	Calculations	Remark
	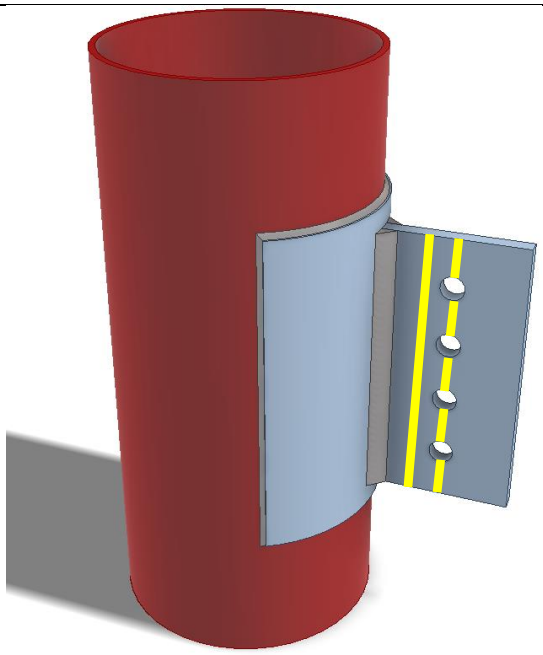	
SS EN1993-1-8 SCI_P358	**Fin plate shear resistance (gross section):** $t_p = 15mm < 16mm$ $\therefore f_{y,p} = 275MPa$ Gross section shear resistance: $V_{Rd,g} = \frac{h_p t_p}{1.27} \frac{f_{y,p}}{\sqrt{3}\gamma_{M0}}$ $= \frac{280 \times 15}{1.27} \times \frac{275}{\sqrt{3}} \times 10^{-3}$ $= 525.07kN$	$h_p = 280mm$ $\gamma_{M0} = 1.0$ (SS EN1993-1-1)
	Fin plate shear resistance (net section): $A_{v,net} = t_p(h_p - n_1 d_0)$ $= 15 \times (280 - 4 \times 22)$ $= 2880mm^2$ Net area shear resistance: $V_{Rd,n} = \frac{A_{v,net} f_{u,p}}{\sqrt{3}\gamma_{M2}}$ $= 2880 \times \frac{430}{\sqrt{3} \times 1.25} \times 10^{-3}$ $= 571.99kN$	Assume: $n_1 = 4$ $d_0 = 22mm$

Check 2 – Fin plate resistance		
Ref	Calculations	Remark
	Fin plate shear resistance (block shear): For single vertical line of bolts ($n_2 = 1$): Net area subject to tension: $A_{nt} = t_p\left(e_2 - \frac{d_0}{2}\right)$ $= 15 \times (70 - \frac{22}{2})$ $= 885mm^2$ Net area subject to shear: $A_{nv} = t_p(h_p - e_1 - (n_1 - 0.5)d_0)$ $= 15 \times (280 - 50 - (4 - 0.5) \times 22)$ $= 2295mm^2$ $V_{Rd,b} = \left(\frac{0.5 f_{u,p} A_{nt}}{\gamma_{M2}} + \frac{f_{y,p}}{\sqrt{3}}\frac{A_{nv}}{\gamma_{M0}}\right)$ $= \left(\frac{0.5 \times 430 \times 885}{1.25} + \frac{275}{\sqrt{3}}\frac{2295}{1.0}\right) \times 10^{-3}$ $= 516.60kN$ $V_{Rd,min} = \min(V_{Rd,g}; V_{Rd,n}; V_{Rd,b})$ $= \min(525.07kN; 571.99kN; 516.60kN)$ $= 516.60kN > V_{Ed} = 400kN$	End distance: $e_1 = 50mm$ Edge distance: $e_2 = 70mm$ OK
SCI_P358 SS EN1993-1-8	**Fin plate bending:** $h_p = 280mm > 2.73z = 191.1mm$ $\therefore V_{Rd} = \infty$ **Lateral torsional buckling:** $z_p = 70mm < \frac{t_p}{0.15} = 100mm$ ∴The fin plate is classified as **Short fin plate**	z = 70mm

Check 2 – Fin plate resistance		
Ref	Calculations	Remark
	$W_{el,p} = \frac{t_p h_p^2}{6}$ $= \frac{15 \times 280^2}{6}$ $= 196000mm^3$ $V_{Rd} = \frac{W_{el,p}}{z} \frac{f_{y,p}}{\gamma_{M0}}$ $= \frac{196000 \times 275}{70 \times 1.0} \times 10^{-3}$ $= 770kN > V_{Ed} = 400kN$	OK

Check 3 – Weld resistance		
Ref	Calculations	Remark
SS EN1993-1-8	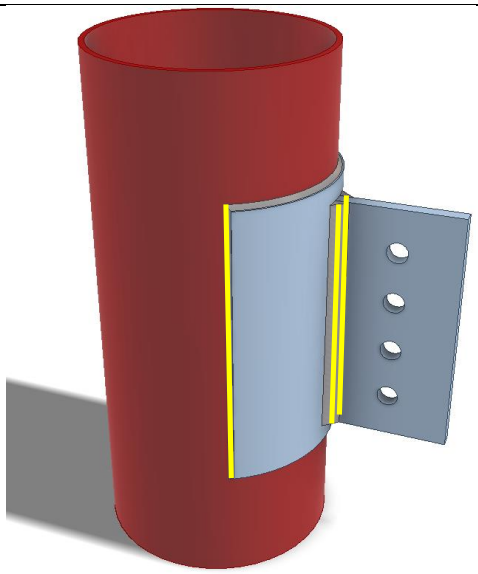 Length of fillet weld: $L_w = h_p = 280mm$ Nominal moment: $M = V_{Ed}z$ $= 400 \times 70$ $= 28000kNmm$ Polar moment of inertia: $J = \frac{L_w^3}{12} = \frac{280^3}{12} = 1829333mm^3$ Applied vertical shear stress: $\tau_v = \frac{V_{Ed}}{2L_w} = \frac{400}{2 \times 280} = 0.714kN/mm$ Applied transverse stress: $\tau_T = \frac{\frac{ML_w}{2}}{J} = 28000 \times \frac{\left(\frac{280}{2}\right)}{1829333}$ $= 1.07kN/mm$	

Check 3 – Weld resistance		
Ref	Calculations	Remark
	Resultant stress: $\tau_r = \sqrt{\tau_v^2 + \tau_T^2}$ $= \sqrt{0.714^2 + 1.07^2}$ $= 1.29kN/mm$ Choose fillet weld with 10mm leg length, 7mm throat thickness and grade S275: Longitudinal resistance: $F_{w,L,Rd} = 1.56kN/mm$ Transverse resistance: $F_{w,T,Rd} = 1.91kN/mm$ Simplified method: $F_{w,L,Rd} = 1.56kN/mm > \tau_r = 1.29kN/mm$ **Directional method:** $SF = \left(\frac{\tau_v}{F_{w,L,Rd}}\right)^2 + \left(\frac{\tau_{h,Ed}}{F_{w,T,Rd}}\right)^2$ $= \left(\frac{0.714}{1.56}\right)^2 + \left(\frac{1.07}{1.91}\right)^2$ $= 0.52 < 1.00$	 OK OK

Check 4 – Local shear resistance		
Ref	Calculations	Remark
SCI_P358	Shear area: $A_v = 2h_p t_c = 2 \times 280 \times 6.3 = 3528mm^2$ Shear resistance of column wall: $F_{Rd} = \frac{A_v f_{c,y}}{\sqrt{3}\gamma_{M0}}$ $= 3528 \times \frac{275}{\sqrt{3}} \times 10^{-3}$ $= 560.185kN > V_{Ed} = 400kN$ If the local shear resistance of the column wall is insufficient, local strengthening by welding a doubler plate may be adopt. The doubler plate will have a greater depth and hence larger shear area.	OK

Check 5 – Punching shear resistance		
Ref	Calculations	Remark
	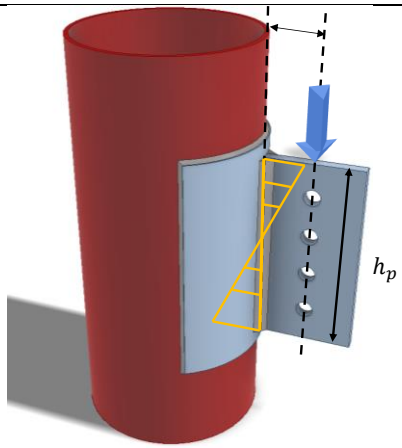	
SCI_P358	SCI_P358 sets the requirement to prevent punching shear failure by ensuring the fin plate yield before punching shear failure. $t_p \leq \frac{t_c f_{u,c}}{f_{y,p}\gamma_{M2}}$ $\leq \frac{6.3 \times 430}{275 \times 1.25}$ ≤ 7.88mm As $t_p = 15mm > 7.88mm$, the requirement is not satisfied, strengthening is necessary.	$f_{u,c} = 430MPa$
SS EN1993-1-8 SCI_P358	According to SS EN1993-1-8 7.4, the punching shear resistance for welded joints connecting plates to CHS members: $\sigma_{max} t_p \leq 2t_c(f_{c,y}/\sqrt{3})/\gamma_{M5}$ As there is no axial loading in this case, applied punching stress: $\sigma_{max} = \frac{M}{W_{el}} = \frac{28000}{196000} = 0.143kN/mm^2$ $\sigma_{max} t_p = 0.143 \times 15 = 2142.86N/mm$ $2t_c(f_{c,y}/\sqrt{3})/\gamma_{M5} = 2 \times 6.3(275/\sqrt{3})/1.0$ $= 2000.52N/mm < \sigma_{max} t_p$ ∴ Strengthening is necessary	

Check 5 – Punching shear resistance		
Ref	Calculations	Remark
SCI_P358 SS EN1993-1-8	Axial load resistance of plate connecting to CHS members: $N_{1,Rd} = \frac{5f_{u,c}t_c^2(1+0.25\eta)0.67}{\gamma_{Mu}}$ $= \frac{5 \times 430 \times 6.3^2(1+0.25 \times 1.03) \times 0.67}{1.1} \times 10^{-3}$ $= 65.303kN$ Moment resistance: $M_{1,Rd} = h_p N_{1,Rd}$ $= 280 \times 65.303$ $= 18284.84kNmm < M = 28000kNmm$ ∴ Strengthening is needed	$\gamma_{Mu} = 1.1$ $\eta = \frac{h_p}{d_c} = \frac{280}{273}$ $= 1.03 < 4$

Check 6 – Design of local strengthening cover plate		
Ref	Calculations	Remark
Design of welded structures	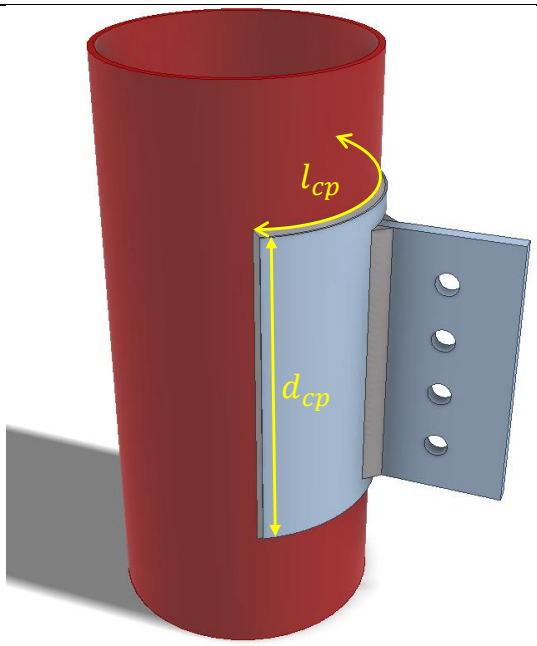 For the design of the cover/doubler plate, the thickness of the cover/doubler plate should be at least equal to the larger thickness of the fin plate or the hollow section. $t_{cp} = \max(t_c; t_{fp}) = 15mm$ $\therefore t_c' = 15 + 6.3 = 21.3mm$ Effective width for load distribution: $e = \frac{\sqrt{t'_c r_c}}{2} = \frac{\sqrt{21.3 \times \frac{273}{2}}}{2} = 26.96mm$ ∴ The minimum depth for cover plate: $d_{cp} = h_p + 2e$ $= 280 + 2 \times 26.96$ $= 333.92mm$ ∴ The depth for cover plate is chosen to be 335mm.	

Check 6 – Design of local strengthening cover plate		
Ref	Calculations	Remark
SCI_P358	$t_p \leq \frac{t'_c f_{u,c}}{f_{y,p}\gamma_{M2}}$ $\leq \frac{21.3 \times 430}{275 \times 1.25}$ ≤ 26.64mm As $t_p = 15mm < 26.64mm$, the requirement is satisfied, the fin plate will yield before punching shear failure.	
SS EN1993-1-8 SCI_P358	$2t'_c(f_{c,y}/\sqrt{3})/\gamma_{M5} = 2 \times 21.3 \times (275/\sqrt{3}\,)/1.0$ $= 67636.58N/mm > \sigma_{max}t_p$ ∴ Punching shear resistance is adequate.	
SCI_P358	Axial load resistance of plate connecting to CHS members: $N'_{1,Rd} = \frac{5f_{u,c}t'^2_c(1+0.25\eta)0.67}{\gamma_{Mu}}$ $= \frac{5 \times 430 \times 21.3^2(1+0.25 \times 1.03) \times 0.67}{1.1}$ $\times 10^{-3}$ $= 747.12kN$	
SS EN1993-1-8	Moment resistance: $M_{1,Rd} = h_p N'_{1,Rd}$ $= 280 \times 747.12$ $= 209193.6kNmm > M = 28000kNmm$ ∴ Moment resistance is adequate	

Check 6 – Design of local strengthening cover plate		
Ref	Calculations	Remark
	Width of cover plate: Assume the angle of load distribution is 45°, the effective width for load distribution is: $l_{min} = t_p + 2s_w + 2t'_c$ $= 15 + 2 \times 10 + 2 \times 21.3$ $= 77.6mm$ As recommended, the cover plate should cover at least 1/3 of the CHS, hence the width of the cover plate: $l = \frac{\pi d_c}{3} = \pi \times \frac{273}{3} = 286mm > l_{min}$ Fillet welds connecting the cover plate to the column follow the same size as that connecting the fin plate and the cover plate. As the depth of the cover plate is greater than that of fin plate, the shear resistance of the welds is greater than that of fin plate.	

4.2.2 Example 2 – Beam to rectangular column connection using fin plate

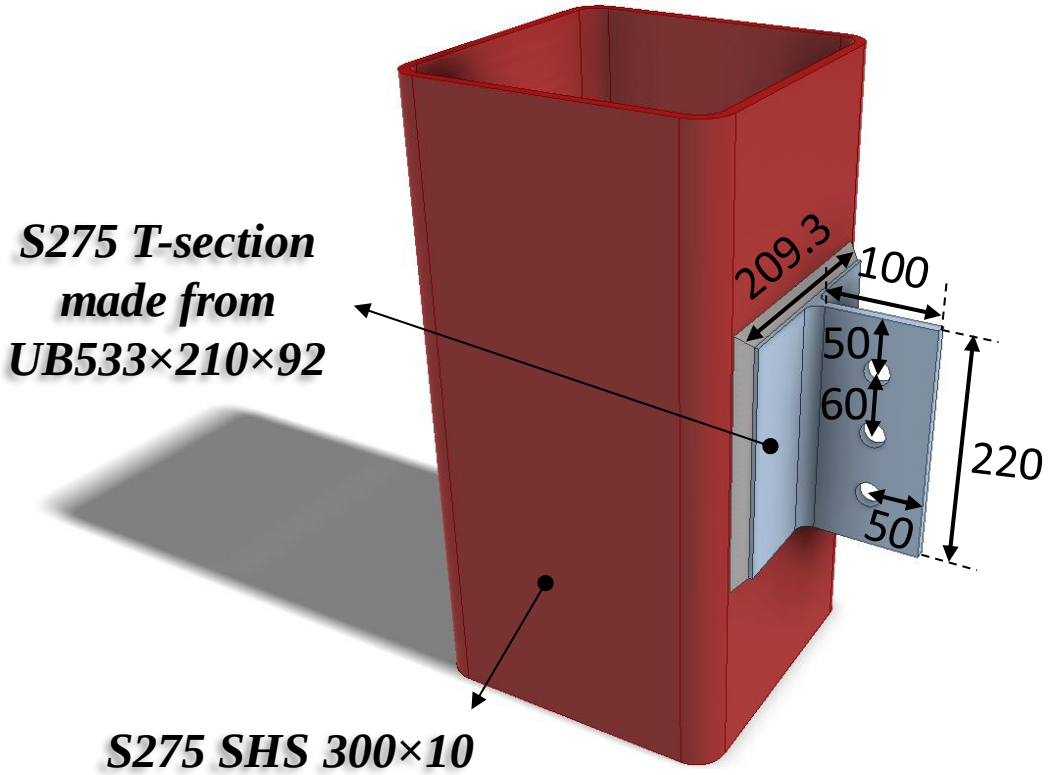

Design loading:

Vertical shear forces: $V_{Ed} = 200kN$

Check 1 – Range of validity		
Ref	Calculations	Remark
CIDECT design guide 9	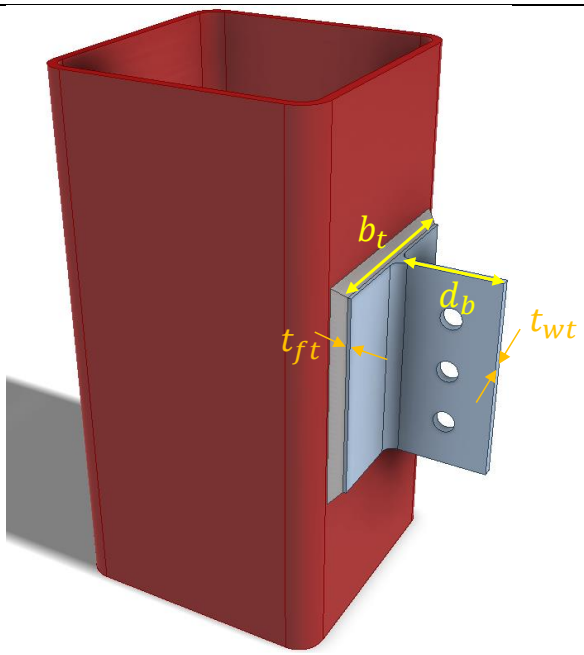 According to CIDECT design guide 9, the width to thickness ratio of tee flange should be greater than 13 to provide desired flexibility. $\frac{b_t}{t_{ft}} = \frac{209.3}{15.6} = 13.42 > 13$ As recommended by AISC (1997), the tee web thickness should be less than $d_b/2 + 2mm$. $t_{wt} = 10.1mm < \frac{100}{2} + 2 = 52mm$ According to CIDECT design guide 9, the only failure mode for RHS wall to be checked is the shear yield strength of the tube wall adjacent to the vertical welds.	T-section is cut from S275 UB533×210×92: $b_t = 209.3mm$ Thickness of the flange: $t_{ft} = 15.6mm$ Thickness of the web: $t_{wt} = 10.1mm$ Width of tee web: $d_b = 100mm$

Check 2 – Tee web resistance		
Ref	Calculations	Remark
	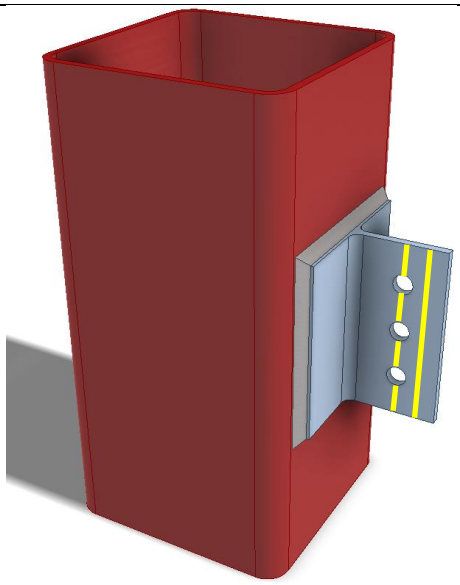	
SCI_P358 SS EN1993-1-8	**Tee web shear resistance (gross section):** $t_{wt} = 10.1mm < 16mm$ $\therefore f_{y,p} = 275MPa$ Gross section shear resistance: $V_{Rd,g} = \frac{h_t t_{wt}}{1.27} \frac{f_{y,p}}{\sqrt{3}\gamma_{M0}}$ $= \frac{220 \times 10.1}{1.27} \times \frac{275}{\sqrt{3}} \times 10^{-3}$ $= 277.79kN$	Depth of tee: $h_t = 220mm$ $\gamma_{M0} = 1.0$ (SS EN1993-1-1)
	Tee web shear resistance (net section): $A_{v,net} = t_{wt}(h_t - n_1 d_0)$ $= 10.1 \times (220 - 3 \times 22)$ $= 1555.4mm^2$ Net area shear resistance: $V_{Rd,n} = \frac{A_{v,net} f_{u,p}}{\sqrt{3}\gamma_{M2}}$ $= 1555.4 \times \frac{430}{\sqrt{3} \times 1.25} \times 10^{-3}$ $= 308.92kN$	Assume: $n_1 = 3$ $d_0 = 22mm$

Check 2 – Tee web resistance		
Ref	Calculations	Remark
	Tee web shear resistance (block shear): For single vertical line of bolts ($n_2 = 1$): Net area subject to tension: $A_{nt} = t_{wt}\left(e_2 - \frac{d_0}{2}\right)$ $= 10.1 \times (50 - \frac{22}{2})$ $= 393.9mm^2$ Net area subject to shear: $A_{nv} = t_{wt}(h_t - e_1 - (n_1 - 0.5)d_0)$ $= 10.1 \times (220 - 50 - (3 - 0.5) \times 22)$ $= 1161.5mm^2$ $V_{Rd,b} = \left(\frac{0.5f_{u,p}A_{nt}}{\gamma_{M2}} + \frac{f_{y,p}}{\sqrt{3}}\frac{A_{nv}}{\gamma_{M0}}\right)$ $= \left(\frac{0.5 \times 430 \times 393.9}{1.25} + \frac{275}{\sqrt{3}}\frac{1161.5}{1.0}\right) \times 10^{-3}$ $= 252.16kN$ $V_{Rd,min} = \min(V_{Rd,g}; V_{Rd,n}; V_{Rd,b})$ $= \min(277.79kN; 308.92kN; 252.16kN)$ $= 252.16kN > V_{Ed} = 200kN$	End distance: $e_1 = 50mm$ Edge distance: $e_2 = 50mm$ OK

Check 3 – Weld capacity		
Ref	Calculations	Remark
SS EN1993-1-8	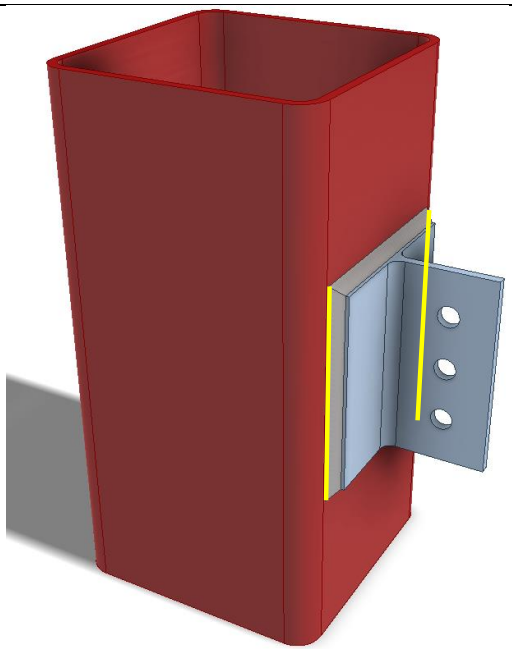 Length of fillet weld: $L_w = h_p = 220mm$ Nominal moment: $M = V_{Ed}z$ $= 200 \times 50$ $= 10000kNmm$ Polar moment of inertia: $J = \frac{L_w^3}{12} = \frac{220^3}{12} = 887333mm^3$ Applied vertical shear stress: $\tau_v = \frac{V_{Ed}}{2L_w} = \frac{200}{2 \times 220} = 0.455kN/mm$ Applied transverse stress: $\tau_T = \frac{\frac{ML_w}{2}}{J} = 10000 \times \frac{\left(\frac{220}{2}\right)}{887333}$ $= 0.620kN/mm$	z = 50mm

Check 3 – Weld capacity		
Ref	Calculations	Remark
	Resultant stress: $\tau_r = \sqrt{\tau_v^2 + \tau_T^2}$ $= \sqrt{0.455^2 + 0.620^2}$ $= 0.769 kN/mm$ Choose fillet weld with 8mm leg length, 5.6mm throat thickness and grade S275: Longitudinal resistance: $F_{w,L,Rd} = 1.25 kN/mm$ Transverse resistance: $F_{w,T,Rd} = 1.53 kN/mm$ **Simplified method:** $F_{w,L,Rd} = 1.25 kN/mm > \tau_r = 0.769 kN/mm$	 OK
	Directional method: $SF = \left(\frac{\tau_v}{F_{w,L,Rd}}\right)^2 + \left(\frac{\tau_{h,Ed}}{F_{w,T,Rd}}\right)^2$ $= \left(\frac{0.455}{1.25}\right)^2 + \left(\frac{0.620}{1.53}\right)^2$ $= 0.30 < 1.00$	 OK

Check 4 – Shear resistance of column wall		
Ref	Calculations	Remark
SCI_P358	Shear area: $A_v = 2h_t t_c = 2 \times 220 \times 10 = 4400mm^2$ Shear resistance of column wall: $F_{Rd} = \frac{A_v f_{c,y}}{\sqrt{3}\gamma_{M0}}$ $= 4400 \times \frac{275}{\sqrt{3}} \times 10^{-3}$ $= 698.59kN > V_{Ed} = 200kN$	For SHS300x300x10: $t_c = 10mm$ OK

4.3 Connection of I-beam to hollow steel columns using extended endplates

Extended endplates can be used to connect I-beam to hollow steel column to resist shear and moment.

4.3.1 Example 3 – Beam to Rectangular column connection using extended end plate

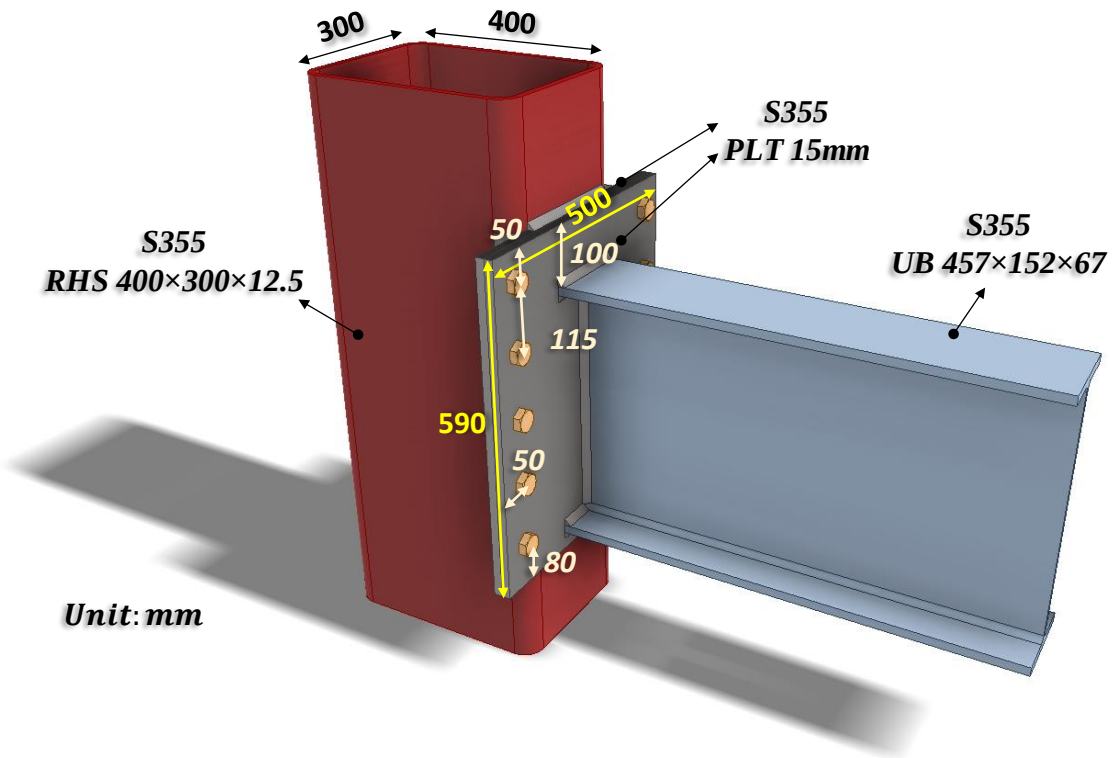

Design loading:

Vertical shear load: $V_{Ed} = 800kN$

Major axis bending moment: $M_{Ed} = 100kNm$

Check 1 – Bolt group resistance		
Ref	Calculations	Remark
	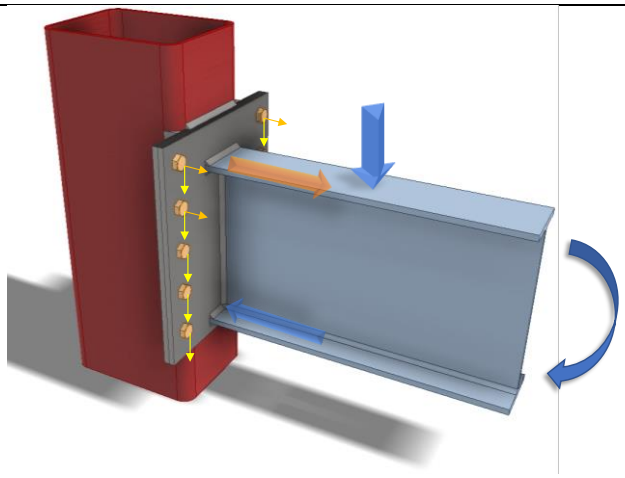 In this example, the bolt group is located along two sides of the RHS and is far away from the beam flange and web. As a result, the traditional prying models developed for T-stubs may not be suitable to calculate the resistance. The shear force is assumed to be shared by all bolts and the end plate must be made thick and stiff enough to prevent deformation. The tension force on beam flange by applied moment is assumed to be taken by bolts around the top beam flange.	
SS EN1993-1-8 SCI_P358	**Bolt shear resistance:** Using class 8.8, M24 bolts with: $A_s = 353mm^2$, $f_{ub} = 800MPa$, $\alpha_v = 0.6$ Shear resistance of a single bolt: $F_{v,Rd} = \frac{\alpha_v f_{ub} A_s}{\gamma_{M2}}$ $= \frac{0.6 \times 800 \times 353}{1.25} \times 10^{-3}$ $= 135.55kN$	$\gamma_{M2} = 1.25$ (refer to NA to SS)

Check 1 – Bolt group resistance		
Ref	Calculations	Remark
	Bearing resistance: $k_1 = \min\left(\frac{2.8e_2}{d_0} - 1.7; 2.5\right)$ $= 2.5$ $\alpha_b = \min\left(\frac{e_1}{3d_0}; \frac{p_1}{3d_0} - \frac{1}{4}; \frac{f_{ub}}{f_u}; 1.0\right)$ $= \min\left(\frac{50}{3 \times 26}; \frac{115}{3 \times 26} - \frac{1}{4}; \frac{800}{530}; 1.0\right)$ $= 0.64$	End distance: $e_1 = 50mm$ Edge distance: $e_2 = 50mm$ Pitch: $p_1 = 115mm$
	Bearing resistance of end plate: $F_{b,ver,Rd} = \frac{k_1 \alpha_b f_{ub} d t_p}{\gamma_{M2}}$ $= \frac{2.5 \times 0.64 \times 800 \times 24 \times 15}{1.25} \times 10^{-3}$ $= 369.23kN$	Thickness of end plate: $t_p = 15mm$
	Distance between end bolts: $L_j = 4p_1 = 4 \times 115 = 460mm > 15d$	
	Reduction factor for long joint: $\beta_{Lj} = 1 - \frac{L_j - 15d}{200d}$ $= 1 - \frac{460 - 15 \times 24}{200 \times 24}$ $= 0.98$	
	For $F_{b,Rd} > 0.8F_{v,Rd}$, $F_{Rd} = 0.8nF_{v,Rd}\beta_{Lj}$ $= 0.8 \times 10 \times 135.55 \times 0.98$ $= 1061.82kN > V_{Ed} = 800kN$	No. of bolts: $n = 10$ OK

Check 1 – Bolt group resistance		
Ref	Calculations	Remark
	Tension resistance: $F_{t,Rd} = \frac{k_2 f_{ub} A_s}{\gamma_{M2}}$ $= \frac{0.9 \times 800 \times 353}{1.25} \times 10^{-3}$ $= 203.33kN$	$k_2 = 0.9$
	Applied shear force on one bolt: $V_{Ed,b} = \frac{V_{Ed}}{n} = \frac{800}{10} = 80kN$	For UB 457x152x67: Beam depth: $h_b = 458mm$ Beam flange thickness: $t_{fb} = 15mm$
	Applied tensile force on beam flange: $F_t = \frac{M_{Ed}}{h_b - t_{fb}} = \frac{100}{458 - 15} \times 10^3$ $= 225.73kN$	
	Assume the tensile force is taken by four bolts around the beam top flange: $F_{t,Ed,b} = \frac{F_t}{4} = \frac{225.73}{4} = 56.43kN$	
	Combined shear and tension: $\frac{V_{Ed,b}}{\beta_{Lj} F_{v,Rd}} + \frac{F_{t,Ed,b}}{1.4 F_{t,Rd}}$ $= \frac{80}{135.55 \times 0.98} + \frac{56.43}{1.4 \times 203.33}$ $= 0.80 < 1.0$	OK

Check 2 – Compression zone check (Localized stress check)		
Ref	Calculations	Remark
	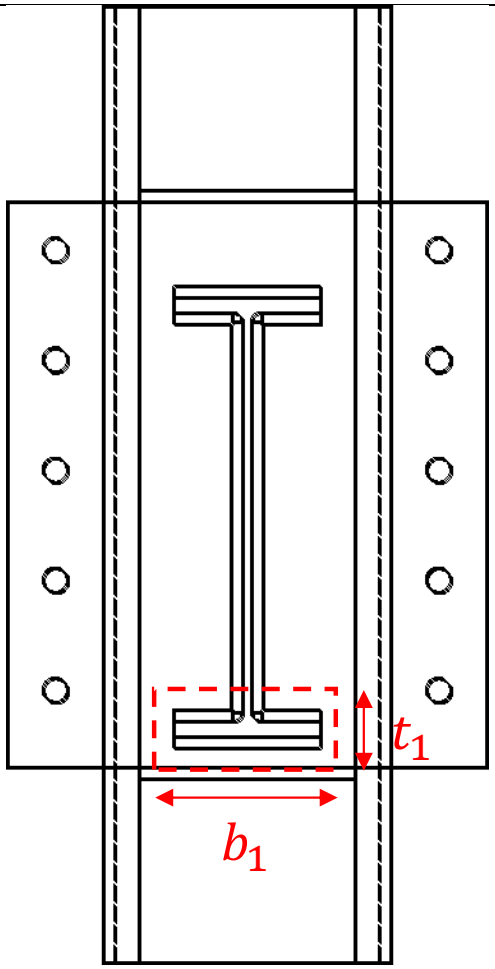	
SS EN1993-1-8	Assume the angle of load dispersion through end plate to the RHS is 45°. Effective thickness of applied compression stress on RHS: $t_1 = t_{fb} + 2s_f + 2 \times 2t_p$ $= 15 + 2 \times 8 + 2 \times 2 \times 15$ $= 91mm$ Effective width of applied compression stress on RHS: $b_1 = b_{fb} + 2 \times 2t_p$ $= 153.8 + 2 \times 2 \times 15$ $= 213.8mm$	Leg length of beam flange fillet weld: $s_f = 8mm$ Width of beam: $b_{fb} = 153.8mm$

Check 2 – Compression zone check (Localized stress check)		
Ref	Calculations	Remark
SS EN1993-1-8 Table 7.13	Ratio of effective width and width of RHS: $\beta = \frac{b_1}{b_c} = \frac{213.8}{300} = 0.713$ Ratio of effective depth of beam to depth of RHS: $\eta = \frac{h_{b,1}}{h_c} = \frac{534}{400} = 1.335$ As $\eta > 2\sqrt{1-\beta} = 2\sqrt{1-0.713} = 1.07$,it is conservative to assume the design resistance of the I beam section is equal to the design resistance of two transverse plates of similar dimensions to the flanges of the I section. For transverse plate with dimensions similar to effective thickness and effective width: As $\beta = 0.71 < 0.85$, Chord face failure: $N_{1,Rd} = \frac{k_n f_{y,c} t_c^2 (2+2.8\beta)}{\sqrt{1-0.9\beta}} / \gamma_{M5}$ $= \frac{1.0 \times 355 \times 12.5^2 \times (2+2.8\times 0.713)}{\sqrt{1-0.9\times 0.713}}$ $\times 10^{-3}$ $= 370.09kN$ Punching shear failure: $N_{1,Rd} = \frac{f_{y,c} t_c}{\sqrt{3}} (2t_1 + 2b_{e,p}) / \gamma_{M5}$ $= 355 \times \frac{12.5}{\sqrt{3}} \times (2\times 91 + 2\times 89.08) \times 10^{-3}$ $= 922.74kN$	For RHS 400x300x12.5: Width: $b_c = 300mm$ Depth: $h_c = 400mm$ Thickness of wall: $t_c = 12.5mm$ Effective depth of beam: $h_{b,1} = h_b + 2s_f$ $+4t_p = 534mm$ Assume $k_n = 1.0$ as the axial force on the column is unknown in this example, for cases with known axial forces on column, k_n should be calculated according to SS EN1993-1-8 $b_{e,p} = \frac{10}{b_c/t_c} b_1$ $= \frac{10}{300/12.5} \times 213.8$ $= 89.08mm$

Check 2 – Compression zone check (Localized stress check)		
Ref	Calculations	Remark
	Applied compression force from beam flange: $F_{Ed,f} = \frac{M_{Ed}}{h_b - t_{fb}} = \frac{100}{458 - 15} \times 10^3$ $= 225.73kN < N_{1,Rd} = 370.09kN$	 OK

Check 3 – Weld resistance		
Ref	Calculations	Remark
	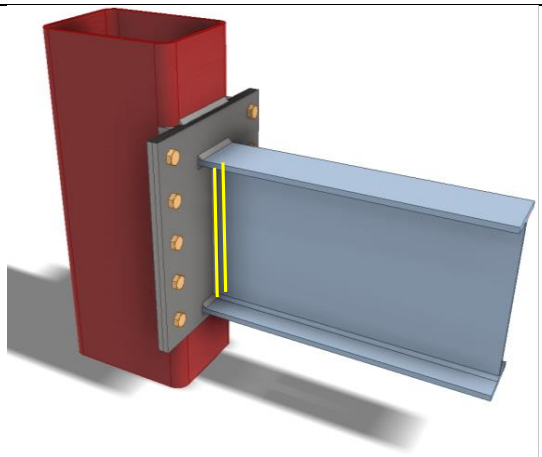	
SS EN1993-1-8	Based on SCI_P363 design weld resistance for S355 fillet weld: Choose fillet weld with 8mm leg length, 5.6mm throat thickness and grade S355: Longitudinal resistance: $F_{w,L,Rd} = 1.35kN/mm$ Transverse resistance: $F_{w,T,Rd} = 1.65kN/mm$ According to SS EN1993-1-8 6.2.2 (1), In weld connections, and in bolted connections with end-plates, the welds connecting the beam web should be designed to transfer the shear force from the connected beam to the joint, without any assistance from the welds connecting the beam flanges. Length of fillet weld connecting beam web: $L_w = 2d_b$ $= 2 \times 407.6$ $= 815.2mm$ Shear resistance: $V_{Rd} = F_{w,L,Rd}L_w$ $= 1.35 \times 815.2$ $= 1100.52kN > V_{Ed} = 800kN$	For UB457x152x67: Depth between fillets: $d_b = 407.6mm$ Root radius: $r = 10.2mm$ Thickness of beam web: $t_w = 9mm$ OK

Check 3 – Weld resistance		
Ref	Calculations	Remark
	For beam flange, the length of fillet weld: $L_{w,t} = 2b_{fb} - t_w - 2r$ $= 2 \times 153.8 - 9 - 2 \times 10.2$ $= 278.2mm$ Tensile resistance: $F_{Rd} = L_{w,t}F_{w,T,Rd}$ $= 278.2 \times 1.65$ $= 459.03kN > F_{Ed,f} = 225.73kN$	 OK

4.4 Connection of narrow beam to hollow steel columns

To avoid stiffening the flange of the hollow steel connection due to local buckling, a transition section, which consists of tapered flange plates, may be used to connect the UB section to the square hollow section as shown in the figure below. The flange and web plate thickness of the transition section should match the plate thickness of the respective UB section.

4.4.1 Example 4 – Narrow I beam to circular hollow column connection

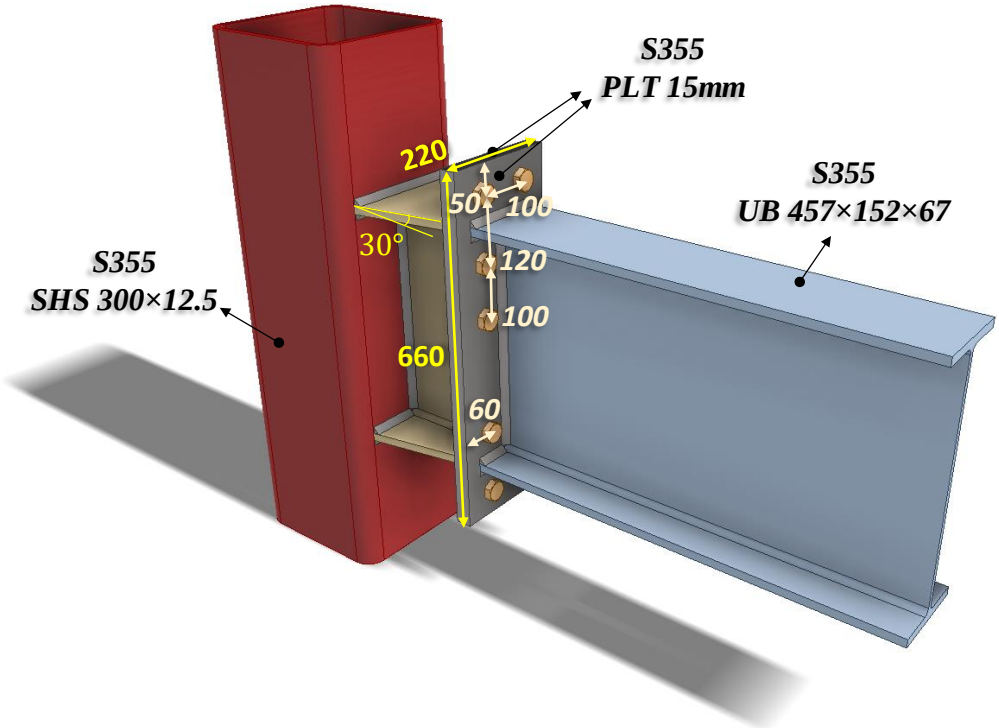

Design loading:

Vertical shear force: $V_{Ed} = 600kN$

Major axis bending moment: $M_{Ed} = 200kNm$

Check 1 – Weld of beam web to end plate		
Ref	Calculations	Remark
	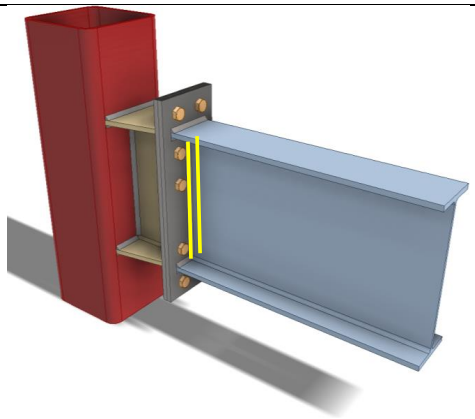 According to SS EN1993-1-8 6.2.2 (1), for welded and bolted connections with end-plate, the welds connecting the beam web should be designed to transfer the shear force from the connected beam to the joint, without any assistance from the welds connecting the beam flanges.	
SS EN1993	Length of fillet weld connecting beam web: $L_w = 2d_b$ $= 2 \times 407.6$ $= 815.2mm$	For UB457x152x67: Depth between fillets: $d_b = 407.6mm$
SCI_P363	Choose fillet weld with 8mm leg length, 5.6mm throat thickness and grade S355: Longitudinal resistance: $F_{w,L,Rd} = 1.35kN/mm$ Transverse resistance: $F_{w,T,Rd} = 1.65kN/mm$ Shear resistance: $V_{Rd} = F_{w,L,Rd}L_w$ $= 1.35 \times 815.2$ $= 1100.52kN > V_{Ed} = 600kN$ The design of flange welds will be in the later part of the calculations.	 OK

Check 2a – Moment resistance (Tension zone T-stubs)		
Ref	Calculations	Remark
	Bolt spacings: End distance: $e_x = 50mm$ Edge distance: $e = 60mm$ Spacing (gauge): $w = 100mm$ Spacing (top row above beam flange): $x = 50mm$ Spacing row 1 – 2: $p_{1-2} = 120mm$ Spacing row 2 – 3:$p_{2-3} = 100mm$ 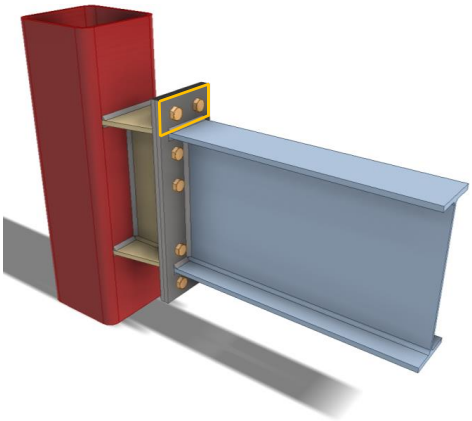	
SCI_P398 SS EN1993-1-8	**Bolt row 1:** **End Plate in Beading** For pair of bolts in an unstiffened end plate extension: The **circular patterns** effective length for: Circular yielding: $l_{eff,cp} = 2\pi m_x = 2 \times \pi \times 40.4 = 253.84mm$ Individual end yielding: $l_{eff,cp} = \pi m_x + 2e_x = \pi \times 40.4 + 2 \times 50$ $= 226.92mm$ Circular group yielding: $l_{eff,cp} = \pi m_x + w = \pi \times 40.4 + 100$ $= 226.92mm$ ∴ The circular pattern effective length: $l_{eff,cp} = \min(253.84; 226.92; 226.92)$ $= 226.92mm$	Assume fillet weld with 12mm leg length is used to connect beam flange to the end plate: $m_x = x - 0.8s_f$ $= 50 - 0.8 \times 12$ $= 40.4mm$

Check 2a – Moment resistance (Tension zone T-stubs)		
Ref	Calculations	Remark
	The **Non-circular patterns** effective length for: Double curvature: $l_{eff,nc} = \frac{b_p}{2} = \frac{220}{2} = 110mm$ Individual end yielding: $l_{eff,nc} = 4m_x + 1.25e_x$ $= 4 \times 40.4 + 1.25 \times 50 = 224.1mm$ Corner yielding: $l_{eff,nc} = 2m_x + 0.625e_x + e$ $= 2 \times 40.4 + 0.625 \times 50 + 60$ $= 172.05mm$ Group end yielding: $l_{eff,nc} = 2m_x + 0.625e_x + \frac{w}{2}$ $= 2 \times 40.4 + 0.625 \times 50 + \frac{100}{2}$ $= 162.05mm$ ∴ The non-circular pattern effective length: $l_{eff,nc} = \min(110.0; 224.1; 172.05; 162.05)$ $= 110.00mm$ Effective length for mode 1: $l_{eff,1} = \min\ (l_{eff,cp}; l_{eff,nc}) = 110.00mm$ Effective length for mode 2: $l_{eff,2} = l_{eff,nc} = 110.00mm$	
SCI_P398 SS EN1993-1-8	Mode 1 Complete flange yielding resistance: $M_{pl,1,Rd} = \frac{0.25 \sum l_{eff,1}\, t_p^2 f_y}{\gamma_{M0}}$ $= \frac{0.25 \times 110.00 \times 15^2 \times 355}{1.0}$ $= 2196563Nmm$	$t_p = 15mm$ As $t_p < 16mm$, $f_y = 355MPa$ Grade 8.8 M24 bolts are used: Diameter of washer: $d_w = 44mm$

Check 2a – Moment resistance (Tension zone T-stubs)		
Ref	Calculations	Remark
	$m = m_x = 40.4mm$ $n = \min\,(1.25m; e)$ $= \min(50.5; 60)$ $= 50.5mm$ Method 1: $F_{T,1,Rd} = \frac{4M_{pl,1,Rd}}{m}$ $= \frac{4 \times 2196563}{40.4} \times 10^{-3}$ $= 217.48kN$ Method 2: $F_{T,1,Rd} = \frac{(8n - 2e_w)M_{pl,1,Rd}}{2mn - e_w(m+n)}$ $= \frac{(8 \times 50.5 - 2 \times 11) \times 2196563}{2 \times 40.4 \times 50.5 - 11 \times (40.4 + 50.5)} \times 10^{-3}$ $= 272.39kN$	$e_w = \frac{d_w}{4} = 11mm$
	Mode 2 Bolt failure with flange yielding resistance: $M_{pl,2,Rd} = \frac{0.25 \sum l_{eff,2}\, t_p^2 f_y}{\gamma_{M0}}$ $= \frac{0.25 \times 110.0 \times 15^2 \times 355}{1.0}$ $= 2196563Nmm$ $F_{t,Rd} = \frac{k_2 f_{ub} A_s}{\gamma_{M2}}$ $= \frac{0.9 \times 800 \times 353}{1.25}$ $= 203328N$	For Grade 8.8 M24 bolts: $k_2 = 0.9$ Ultimate strength: $f_{ub} = 800MPa$ Shear area: $A_s = 353mm^2$

Check 2a – Moment resistance (Tension zone T-stubs)		
Ref	Calculations	Remark
	$\sum F_{t,Rd} = 2 \times F_{t,Rd} = 2 \times 203328$ $= 406656N$ $F_{T,2,Rd} = \frac{2M_{pl,2,Rd} + n\sum F_{t,Rd}}{m+n}$ $= \frac{2 \times 2196563 + 50.5 \times 406656}{40.4 + 50.5} \times 10^{-3}$ $= 274.25kN$ Mode 3 Bolt failure resistance: $F_{T,3,Rd} = \sum F_{t,Rd} = 2F_{t,Rd}$ $= 2 \times 203328 \times 10^{-3}$ $= 406.66kN$ Resistance of end plate in bending: $F_{t,ep,Rd} = \min\{F_{T,1,Rd}; F_{T,2,Rd}; F_{T,3,Rd}\}$ $= \min(217.48; 274.25; 406.66\}$ $= 217.48kN$ **Beam web in tension** As bolt row 1 is in the extension of the end plate, the resistance of the beam web in tension is not applicable to this bolt row. 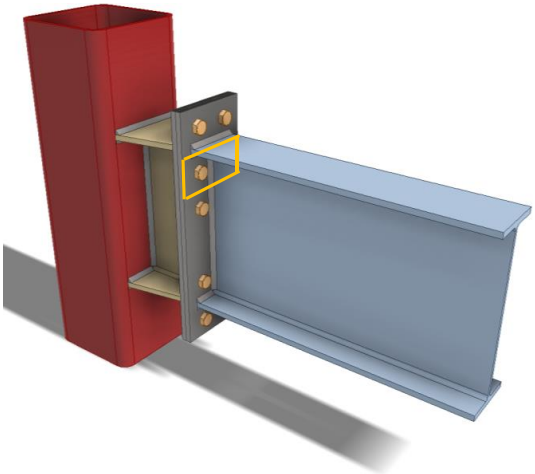	

Check 2a – Moment resistance (Tension zone T-stubs)		
Ref	Calculations	Remark
SS EN1993-1-8	**Bolt row 2:** **End plate in bending** $m = m_p = 39.1mm$ $e = 60mm$ $m_2 = p_{1-2} - x - t_{fb} - 0.8s_f$ $= 120 - 50 - 15 - 0.8 \times 12$ $= 45.4mm$ Based on Figure 6.11 of SS EN1993-1-8: Values of α for stiffened column flanges and end-plates, $\alpha = 6.5$ For pair of bolts in a column flange below a stiffener (or cap plate) or in an end plate below the beam flange: The **circular patterns** effective length for: Circular yielding: $l_{eff,cp} = 2\pi m = 2\pi \times 39.1 = 245.67mm$ The **non-circular patterns** effective length for: Side yielding near beam flange or a stiffener: $l_{eff,nc} = \alpha m = 6.5 \times 39.1 = 254.15mm$ Effective length for mode 1: $l_{eff,1} = \min(l_{eff,cp}; l_{eff,nc}) = 245.67mm$ Effective length for mode 2: $l_{eff,2} = l_{eff,nc} = 254.15mm$	$m_p = (w - t_{wb} - 2 \times 0.8s_w)/2$ $= (100 - 9 - 2 \times 0.8 \times 8)/2$ $= 39.1mm$ $\lambda_1 = \frac{m}{m+e}$ $= \frac{39.1}{39.1 + 60}$ $= 0.39$ $\lambda_2 = \frac{m_2}{m+e}$ $= \frac{45.4}{39.1 + 60}$ $= 0.46$
SCI_P398 SS EN1993-1-8	Mode 1 Complete flange yielding resistance: $M_{pl,1,Rd} = \frac{0.25 \sum l_{eff,1}\, t_p^2 f_y}{\gamma_{M0}}$ $= \frac{0.25 \times 245.67 \times 15^2 \times 355}{1.0}$ $= 4905774Nmm$	

Check 2a – Moment resistance (Tension zone T-stubs)		
Ref	Calculations	Remark
	$n = \min(1.25m; e)$ $= \min(48.88; 60)$ $= 48.88mm$ Method 1: $F_{T,1,Rd} = \frac{4M_{pl,1,Rd}}{m}$ $= \frac{4 \times 4905774}{39.1} \times 10^{-3}$ $= 501.87kN$ Method 2: $F_{T,1,Rd} = \frac{(8n - 2e_w)M_{pl,1,Rd}}{2mn - e_w(m+n)}$ $= \frac{(8 \times 48.88 - 2 \times 11) \times 4905774}{2 \times 39.1 \times 48.88 - 11 \times (39.1 + 48.88)} \times 10^{-3}$ $= 634.21kN$ Mode 2 Bolt failure with flange yielding resistance: $M_{pl,2,Rd} = \frac{0.25 \sum l_{eff,2}\, t_p^2 f_y}{\gamma_{M0}}$ $= \frac{0.25 \times 254.15 \times 15^2 \times 355}{1.0}$ $= 5075058Nmm$ $F_{T,2,Rd} = \frac{2M_{pl,2,Rd} + n \sum F_{t,Rd}}{m+n}$ $= \frac{2 \times 5075058 + 48.88 \times 406656}{39.1 + 48.88} \times 10^{-3}$ $= 341.30kN$	

Check 2a – Moment resistance (Tension zone T-stubs)		
Ref	Calculations	Remark
	Mode 3 Bolt failure resistance: $F_{T,3,Rd} = \sum F_{t,Rd} = 2F_{t,Rd}$ $= 2 \times 203328 \times 10^{-3}$ $= 406.66kN$ Resistance of end plate in bending: $F_{t,ep,Rd} = \min\{F_{T,1,Rd}; F_{T,2,Rd}; F_{T,3,Rd}\}$ $= \min(501.87; 341.30; 406.66\}$ $= 341.30kN$	
SS EN1993-1-8 6.2.6.8 (1)	**Beam web in tension** $F_{t,wb,Rd} = \frac{b_{eff,t,wc} t_{wb} f_{y,b}}{\gamma_{M0}}$ $= \frac{245.67 \times 9.0 \times 355}{1.0} \times 10^{-3}$ $= 784.92kN$ 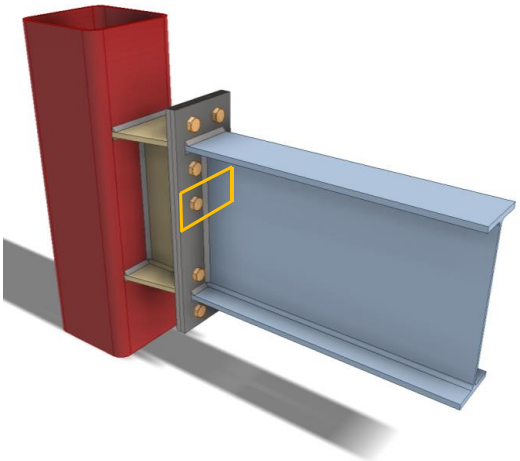 **Bolt row 3:** **End plate in bending** For pair of bolts in a column flange away from any stiffener or in an end plate, away from the flange or any stiffener: The circular patterns effective length for:	$b_{eff,c,wc} = l_{eff}$ $= 245.67mm$ *Conservatively, consider the smallest l_{eff} (6.2.6.8 (2)) For UB 457x152x67: $t_{wb} = 9.0mm$

Check 2a – Moment resistance (Tension zone T-stubs)		
Ref	Calculations	Remark
SCI_P398 SS EN1993-1-8	Circular yielding: $l_{eff,cp} = 2\pi m = 2\pi \times 39.1 = 245.67mm$ The non-circular patterns effective length for: Side yielding: $l_{eff,nc} = 4m + 1.25e = 4 \times 39.1 + 1.25 \times 60$ $= 231.4mm$ Effective length for mode 1: $l_{eff,1} = \min(l_{eff,cp}; l_{eff,nc}) = 231.4mm$ Effective length for mode 2: $l_{eff,2} = l_{eff,nc} = 231.4mm$ Mode 1 Complete flange yielding resistance: $M_{pl,1,Rd} = \frac{0.25 \sum l_{eff,1}\, t_p^2 f_y}{\gamma_{M0}}$ $= \frac{0.25 \times 231.4 \times 15^2 \times 355}{1.0}$ $= 4620769Nmm$ $n = \min\,(1.25m; e)$ $= \min(48.88; 60)$ $= 48.88mm$ Method 1: $F_{T,1,Rd} = \frac{4M_{pl,1,Rd}}{m}$ $= \frac{4 \times 4620769}{39.10} \times 10^{-3}$ $= 472.71kN$	

Check 2a – Moment resistance (Tension zone T-stubs)		
Ref	Calculations	Remark
	Method 2: $F_{T,1,Rd} = \frac{(8n - 2e_w)M_{pl,1,Rd}}{2mn - e_w(m+n)}$ $= \frac{(8 \times 48.88 - 2 \times 11) \times 4620769}{2 \times 39.1 \times 48.88 - 11 \times (39.1 + 48.88)} \times 10^{-3}$ $= 597.37kN$ Mode 2 Bolt failure with flange yielding resistance: $M_{pl,2,Rd} = \frac{0.25 \sum l_{eff,2}\, t_p^2 f_y}{\gamma_{M0}}$ $= \frac{0.25 \times 231.40 \times 15^2 \times 355}{1.0}$ $= 4620769Nmm$ $F_{T,2,Rd} = \frac{2M_{pl,2,Rd} + n \sum F_{t,Rd}}{m+n}$ $= \frac{2 \times 4620769 + 48.88 \times 406656}{39.1 + 48.88} \times 10^{-3}$ $= 330.97kN$ Mode 3 Bolt failure resistance: $F_{T,3,Rd} = \sum F_{t,Rd} = 2F_{t,Rd}$ $= 2 \times 203328 \times 10^{-3}$ $= 406.66kN$ Resistance of end plate in bending: $F_{t,ep,Rd} = \min\{F_{T,1,Rd}; F_{T,2,Rd}; F_{T,3,Rd}\}$ $= \min(472.71; 330.97; 406.66\}$ $= 330.97kN$	

Check 2a – Moment resistance (Tension zone T-stubs)		
Ref	Calculations	Remark
SS EN1993-1-8 6.2.6.8 (1)	**Beam web in tension** $F_{t,wb,Rd} = \frac{b_{eff,t,wc} t_{wb} f_{y,b}}{\gamma_{M0}}$ $= \frac{231.4 \times 9.0 \times 355}{1.0} \times 10^{-3}$ $= 739.32kN$ 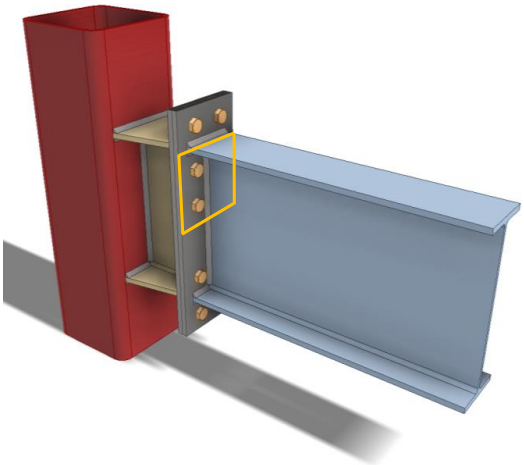 **Bolt row 2 & 3 combined:** **End plate in bending** As row 1 and row 2 is separated by beam flange, row 1 acts individually. However, for bolt row 3, the resistance of it may be limited by the resistance of rows 2 & 3 as a group.	$b_{eff,c,wc} = l_{eff}$ $= 231.4mm$
SS EN1993-1-8 6.2.6.5 Table 6.6	Row 2 is classified as "First bolt-row below tension flange of beam" with effective length: Circular patterns: $l_{eff,cp} = \pi m + p = \pi \times 39.1 + 100$ $= 222.84mm$ Non-circular patterns: $l_{eff,nc} = 0.5p + \alpha m - (2m + 0.625e)$ $= 0.5 \times 100 + 6.5 \times 39.1 - (2 \times 39.1 + 0.625 \times 60)$ $= 188.45mm$	

Check 2a – Moment resistance (Tension zone T-stubs)		
Ref	Calculations	Remark
	Row 3 is classified as "Other end bolt-row" with effective length: Circular patterns: $l_{eff,cp} = \pi m + p = \pi \times 39.1 + 100$ $= 222.84mm$ Non-circular patterns: $l_{eff,nc} = 2m + 0.625e + 0.5p$ $= 2 \times 39.1 + 0.625 \times 60 + 0.5 \times 100$ $= 165.70mm$ The total effective length for this bolt group combination: $\sum l_{eff,cp} = 222.84 + 222.84 = 445.67mm$ $\sum l_{eff,nc} = 188.45 + 165.70 = 354.15mm$ Effective length for mode 1: $\sum l_{eff,1} = \min\left(\sum l_{eff,cp}; \sum l_{eff,nc}\right)$ $= 354.15mm$ Effective length for mode 2: $\sum l_{eff,2} = \sum l_{eff,nc} = 354.15mm$ Mode 1 Complete flange yielding resistance: $M_{pl,1,Rd} = \frac{0.25 \sum l_{eff,1}\, t_p^2 f_y}{\gamma_{M0}}$ $= \frac{0.25 \times 354.15 \times 15^2 \times 355}{1.0}$ $= 7071933Nmm$ $n = \min\,(1.25m; e)$ $= \min(48.88; 60)$ $= 48.88mm$	

Check 2a – Moment resistance (Tension zone T-stubs)		
Ref	Calculations	Remark
	Method 1: $F_{T,1,Rd} = \frac{4M_{pl,1,Rd}}{m}$ $= \frac{4 \times 7071933}{39.10} \times 10^{-3}$ $= 723.47kN$ Method 2: $F_{T,1,Rd} = \frac{(8n - 2e_w)M_{pl,1,Rd}}{2mn - e_w(m+n)}$ $= \frac{(8 \times 48.88 - 2 \times 11) \times 7071933}{2 \times 39.1 \times 48.88 - 11 \times (39.1 + 48.88)} \times 10^{-3}$ $= 914.25kN$ Mode 2 Bolt failure with flange yielding resistance: $M_{pl,2,Rd} = \frac{0.25 \sum l_{eff,2}\, t_p^2 f_y}{\gamma_{M0}}$ $= \frac{0.25 \times 354.15 \times 15^2 \times 355}{1.0}$ $= 7071933Nmm$ $F_{T,2,Rd} = \frac{2M_{pl,2,Rd} + n \sum F_{t,Rd}}{m+n}$ $= \frac{2 \times (7071933 + 48.88 \times 406656)}{39.1 + 48.88} \times 10^{-3}$ $= 612.61kN$ Mode 3 Bolt failure resistance: $F_{T,3,Rd} = \sum F_{t,Rd} = 4F_{t,Rd}$ $= 4 \times 203328 \times 10^{-3}$ $= 813.31kN$	

<table>
<tr><th colspan="3">Check 2a – Moment resistance (Tension zone T-stubs)</th></tr>
<tr><th>Ref</th><th>Calculations</th><th>Remark</th></tr>
<tr><td>SS EN1993-1-8
6.2.6.8 (1)</td><td>Resistance of end plate in bending:
$F_{t,ep,Rd} = \min\{F_{T,1,Rd}; F_{T,2,Rd}; F_{T,3,Rd}\}$

$= \min(723.47; 612.61; 813.31\}$

$= 612.61kN$

Beam web in tension

$F_{t,wb,Rd} = \frac{b_{eff,t,wc} t_{wb} f_{y,b}}{\gamma_{M0}}$

$= \frac{354.15 \times 9 \times 355}{1.0} \times 10^{-3}$

$= 1131.51kN$

The resistance of bolt row 3 is limited to:
$F_{t3,Rd} = F_{t2-3,Rd} - F_{t2,Rd} = 612.61 - 341.30$

$= 271.32kN$

Summary of tension resistance of T-stubs:

<table><tr><th>Row</th><th>Resistance</th><th>Effective Resistance</th></tr><tr><td>Row 1 alone</td><td>217.48kN</td><td>217.48kN</td></tr><tr><td>Row 2 alone</td><td>341.30kN</td><td>341.30kN</td></tr><tr><td>Row 3 alone</td><td>330.97kN</td><td>271.32kN</td></tr><tr><td>Row 2 and 3</td><td>612.61kN</td><td>-</td></tr></table></td><td>$b_{eff,c,wc} = \sum l_{eff}$

$= 354.15mm$</td></tr>
</table>

Check 2b – Moment resistance (Compression zone)		
Ref	Calculations	Remark
SS EN1993-1-8 6.2.6.7 (1)	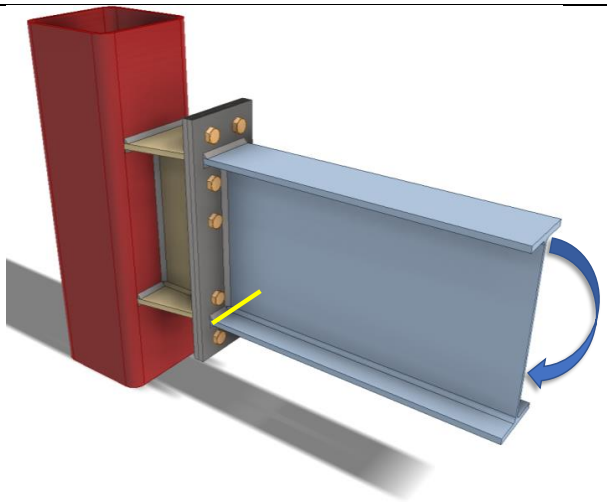 Design moment resistance of the beam cross-section (S355 UB457x152x67): $M_{c,Rd} = 561kNm$ $F_{c,fb,Rd} = \frac{M_{c,Rd}}{h - t_{fb}}$ $= \frac{561}{458 - 15} \times 10^3$ $= 1266.37kN$	$M_{c,Rd}$ is read from SCI_P363 page D-66 For UB457x152x67: $h_b = 458mm$ $t_{fb} = 15mm$

Check 2 – Moment resistance		
Ref	Calculations	Remark
	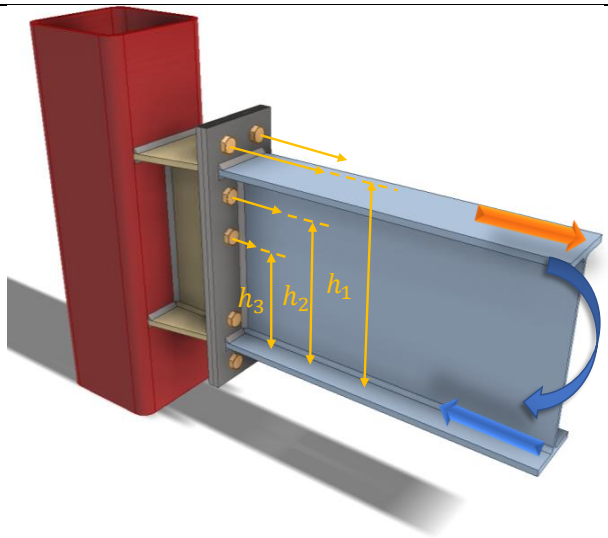	
SS EN1993-1-8 6.2.7.2 (9)	The effective resistances of bolt rows need to be reduced when the bolt row resistance is greater than $1.9F_{t,Rd}$ $1.9F_{t,Rd} = 1.9 \times 203.33 = 386.32kN$ As all bolt row resistances are lesser than 386.32kN, no reduction is required. **Equilibrium of forces** Total effective tension resistance: $\sum F_{t,Rd} = 217.48 + 341.30 + 271.32$ $= 830.09kN < F_{c,fb,Rd} = 1266.37kN$ Hence, no reduction is required for the tensile resistance.	
SS EN1993-1-8 6.2.7.2 (1)	The moment resistance of the connection may be determined using: $M_{j,Rd} = \sum_r h_r F_{t,r,Rd}$	

Check 2 – Moment resistance		
Ref	Calculations	Remark
	Taking the center of compression to be at the mid-thickness of the compression flange of the beam: $h_1 = h_b - (\frac{t_{fb}}{2}) + x$ $= 458 - \left(\frac{15}{2}\right) + 50$ $= 500.5mm$ $h_2 = h_1 - 120 = 380.5mm$ $h_3 = h_2 - 100 = 280.5mm$ $M_{j,Rd} = h_1 F_{1,r,Rd} + h_2 F_{2,r,Rd} + h_3 F_{3,r,Rd}$ $= 500.5 \times 217.48 + 380.5 \times 341.30 + 280.5 \times 271.32$ $= 314.82kNm > M_{Ed} = 200kNm$	OK

Check 3 – Shear resistance of bolt group		
Ref	Calculations	Remark
	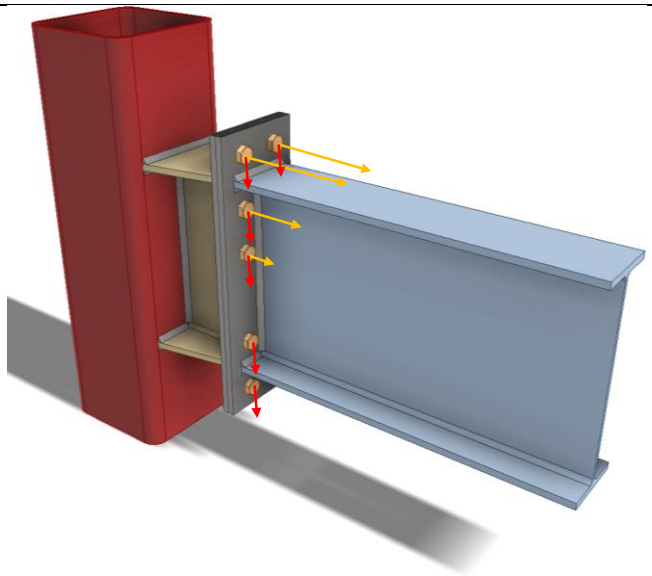	
SCI_P398	For Grade 8.8 M24 bolts: $\alpha_v = 0.6$ $A_s = 353mm^2$ $f_{ub} = 800MPa$ Shear resistance of an individual bolt: $F_{v,Rd} = \frac{\alpha_v f_{ub} A_s}{\gamma_{M2}}$ $= \frac{0.6 \times 800 \times 353}{1.25} \times 10^{-3}$ $= 135.55kN$ $k_1 = \min\left(\frac{2.8e_2}{d_0} - 1.7; 2.5\right)$ $= \min\left(2.8 \times \frac{60}{26} - 1.7; 2.5\right)$ $= 2.5$ $\alpha_b = \min\left(\frac{p_1}{3d_0} - \frac{1}{4}; \frac{e_1}{3d_0}; \frac{f_{ub}}{f_u}; 1.0\right)$ $= \min\left(\frac{100}{3 \times 26} - \frac{1}{4}; \frac{50}{3 \times 26}; \frac{800}{470}; 1.0\right)$ $= 0.64$	

Check 3 – Shear resistance of bolt group		
Ref	Calculations	Remark
	Bearing resistance of an individual bolt: $F_{b,Rd} = \frac{k_1 \alpha_b f_u d t}{\gamma_{M2}}$ $= \frac{2.5 \times 0.64 \times 470 \times 24 \times 15}{1.25}$ $= 235.38kN$ Hence, resistance of an individual bolt: $F_{Rd} = \min(F_{v,Rd}; F_{b,Rd})$ $= \min(135.55; 235.38)$ $= 135.55kN$ According to SCI_P398, the shear resistance of the upper rows may be taken conservatively as 28% of the shear resistance without tension, thus the shear resistance of the bolt group is: $V_{Rd} = (4 + 6 \times 0.28) \times F_{Rd}$ $= 5.68 \times 135.55$ $= 769.94kN > V_{Ed} = 600kN$	OK

Check 4 – Weld of beam flange to end plate		
Ref	Calculations	Remark
	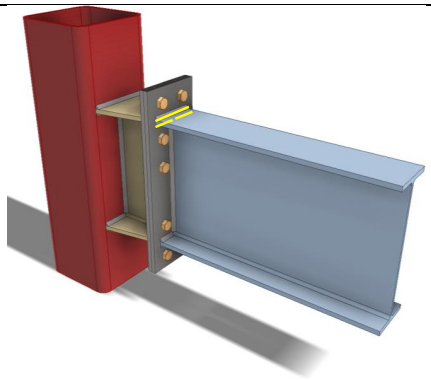	
SS EN1993	Length of fillet weld connecting beam flange: $L_{w,f} = 2b_{fb} - t_{wb} - 2r_b$ $= 2 \times 153.8 - 9.0 - 2 \times 10.2$ $= 278.2mm$	For UB457x152x67: Width of beam flange: $b_{fb} = 153.8mm$ Thickness of beam web: $t_{wb} = 9.0mm$ Root radius: $r_b = 10.2mm$
SCI_P363	Choose fillet weld with 12mm leg length, 8.4mm throat thickness and grade S355: Longitudinal resistance: $F_{w,L,Rd} = 2.03kN/mm$ Transverse resistance: $F_{w,T,Rd} = 2.48kN/mm$ Tensile resistance of flange weld: $F_{t,Rd,f} = L_{w,f}F_{w,T,Rd}$ $= 278.2 \times 2.48$ $= 689.94kN$ Applied tensile force on beam flange: $F_{t,Ed,f} = \frac{M_{Ed}}{h_b - t_{fb}}$ $= \frac{200}{458 - 15} \times 10^3$ $= 451.47kN < F_{t,Rd,f}$	OK

Check 5 – RHS resistance		
Ref	Calculations	Remark
	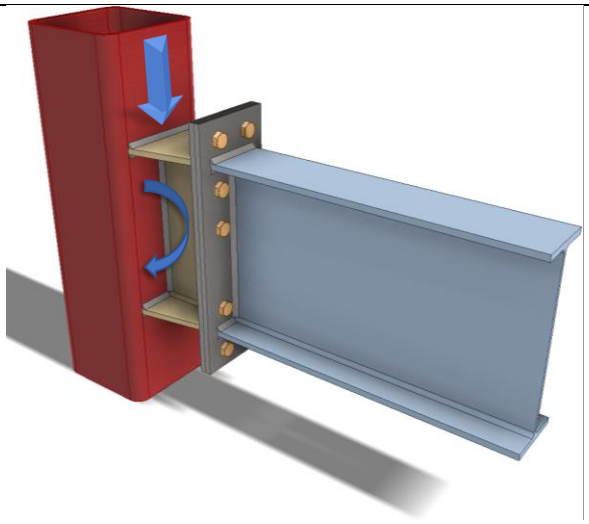	
SS EN1993-1-8	For RHS 300x300x12.5: Column width: $b_c = 300mm$ Thickness of column wall: $t_c = 12.5mm$ Yield strength of column: $f_{c,y} = 355MPa$ As the horizontal haunch has same width as the column, the ratio of width of flange to width of RHS $\beta = 1.0$. Ratio of depth of haunch to width of RHS: $\eta = \frac{h_b}{b_c} = \frac{458}{300} = 1.53$ As $\eta > 2\sqrt{1-\beta}$, it is conservative to assume the design resistance of haunch is equal to design resistance of two transverse plates of similar dimensions to the flanges of haunch.	Assume $k_n = 1.0$ as the axial force on the column is unknown in this example, for cases with known axial forces on column, k_n should be calculated according to SS EN1993-1-8

Check 5 – RHS resistance		
Ref	Calculations	Remark
	As the width of haunch $b_1 > b_c - t_c$, the failure mode of RHS is chord side wall crushing: $N_{1,Rd} = \frac{k_n f_{c,y} t_c (2t_{fb} + 10t_c)}{\gamma_{M5}}$ $= \frac{1.0 \times 355 \times 12.5 \times (2 \times 15 + 10 \times 12.5)}{1.0} \times 10^{-3}$ $= 687.81kN$ Distance between end plate center to RHS surface: $L_{haunch} = 127mm$ Applied shear force on RHS surface: $V_{Ed2} = V_{Ed} = 600kN$ Applied tensile force on haunch flange: $F_{Ed2} = \frac{M_{Ed}}{h_b - t_{fb}} = \frac{200}{458 - 15} \times 10^3$ $= 451.47kN < N_{1,Rd}$	OK
	Flange weld resistance: Length of fillet weld connecting beam flange: $L_{w,f} = 2b_c - t_{wb} - 2r_b$ $= 2 \times 300 - 9.0 - 2 \times 10.2$ $= 570.6mm$	
SCI_P363	Choose fillet weld with 8mm leg length, 5.6mm throat thickness and grade S355: Longitudinal resistance: $F_{w,L,Rd} = 1.35kN/mm$ Transverse resistance: $F_{w,T,Rd} = 1.65kN/mm$	

Check 5 – RHS resistance		
Ref	Calculations	Remark
	Tensile resistance of flange weld: $F_{t,Rd,f} = L_{w,f} F_{w,T,Rd}$ $= 570.6 \times 1.65$ $= 941.49kN > F_{Ed2}$	 OK

Note:

In order to minimize the effect of stress concentration, the horizontal haunch connecting the beam and RHS should have an angle less than 45° respect to the connected beam to ensure smooth flow of stress.

4.5 Connection of I-beam to circular hollow section steel column

A good practice for steel construction is to adopt a strategy to weld at the factory and bolt at the site. For beam-to-column moment connections, one way to achieve this good practice is to weld a beam stub to the column in the factory and provide a beam splice bolted connection as shown below. This beam splice connection should have sufficient length away from the column to install the top and cover plates. If the diameter of column is very much larger than the beam for this type of connection, local effect needs to be checked and local strengthening of the column using double plate can be applied.

4.5.1 Example 5 – I beam to circular column connection with beam stub pre-welded to column

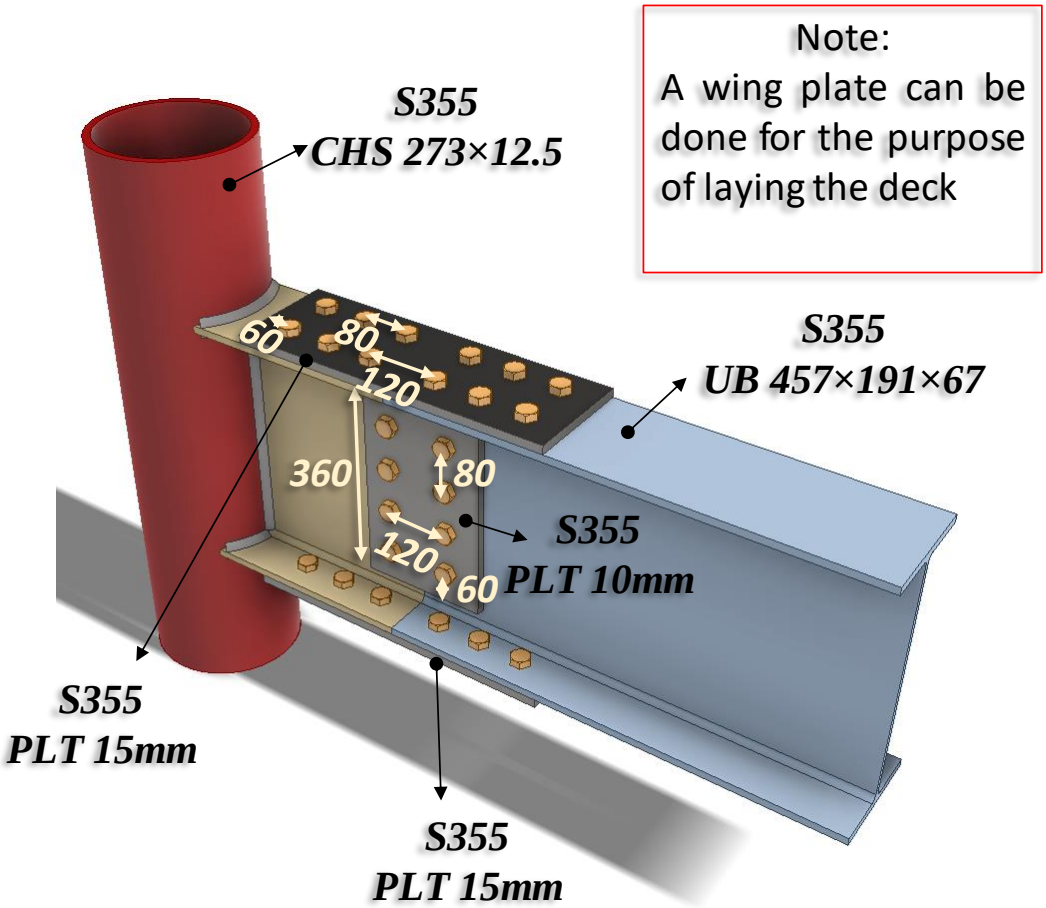

Design loading:

Vertical shear force: $V_{Ed} = 150kN$

Major axis bending moment: $M_{Ed} = 100kNm$

Distribution of internal forces		
Ref	Calculations	Remark
	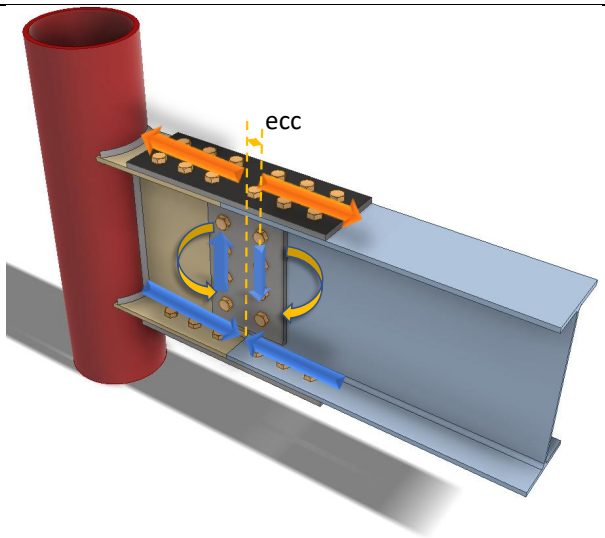	
SCI_P398	For grade S355 UB 457x191x67: Depth of section: $h_b = 453.4mm$ Width of section: $b_b = 189.9mm$ Thickness of beam web: $t_w = 8.5mm$ Thickness of beam flange: $t_f = 12.7mm$ Root radius: $r_b = 10.2mm$ Cross-section area: $A = 8550mm^2$ Second moment of area about major axis y: $I_y = 29400cm^4$ Elastic modulus about major axis y: $W_{el,y} = 1300cm^3$ Yield strength: $f_{y,b} = 355MPa$ Ultimate strength: $f_{u,b} = 470MPa$ Second moment of area of the web: $I_{y,web} = \frac{(h_b - 2t_f)^3 t_w}{12}$ $= (453.4 - 2 \times 12.7)^3 \times \frac{8.5}{12}$ $= 55535283mm^4$	

Distribution of internal forces		
Ref	Calculations	Remark
	The force in each flange due to moment: $F_{f,M} = \frac{\left(1 - \frac{I_{y,web}}{I_y}\right) M_{Ed}}{h_b - t_f}$ $= \left(1 - \frac{55535283}{294000000}\right) \times \frac{100}{453.4 - 12.7} \times 10^3$ $= 184.05kN$ Moment in the web: $M_{Ed,w} = \left(\frac{I_{y,web}}{I_y}\right) M_{Ed}$ $= \left(\frac{55535283}{294000000}\right) \times 100$ $= 18.89kNm$ Eccentricity of the bolt group from the centerline of splice: $ecc = 60mm$ Additional moment in the web due to eccentricity: $M_{ecc} = V_{Ed} ecc$ $= 150 \times 60 \times 10^{-3}$ $= 9.0kNm$ No. of bolts in the flange splice (on one side of the centerline of the splice): $n_f = 6$ Force on bolts in the flange: $F_{f,v} = \frac{F_{f,M}}{n_f} = \frac{184.05}{6} = 30.67kN$	

Distribution of internal forces		
Ref	Calculations	Remark
	No. of bolts in the web: $n = 4$ Vertical shear force on each bolt in the web (double shear): $F_{z,V} = \frac{V_{Ed}}{2n}$ $= \frac{150}{2 \times 4}$ $= 18.75kN$ Second moment of the bolt group: $I_{bolts} = \Sigma(x_i^2 + y_i^2)$ $= 2 \times 120^2 + 2 \times 40^2$ $= 32000mm^2$ Vertical distance of the extreme bolt from the centroid of the group: $Z_{max} = 120mm$ Horizontal force on each bolt in web (double shear): $F_{x,V} = \frac{(M_{Ed,w} + M_{ecc})Z_{max}}{2I_{bolts}}$ $= \frac{(18.89 + 9)}{2} \times \frac{120}{32000} \times 10^3$ $= 52.29kN$ Resultant force on an extreme bolt: $F_{V,Ed} = \sqrt{F_{x,V}^2 + F_{z,V}^2}$ $= \sqrt{18.75^2 + 52.29^2}$ $= 55.55kN$	

Check 1 – Bolt group resistance		
Ref	Calculations	Remark
SCI_P398 SS EN1993-1-8	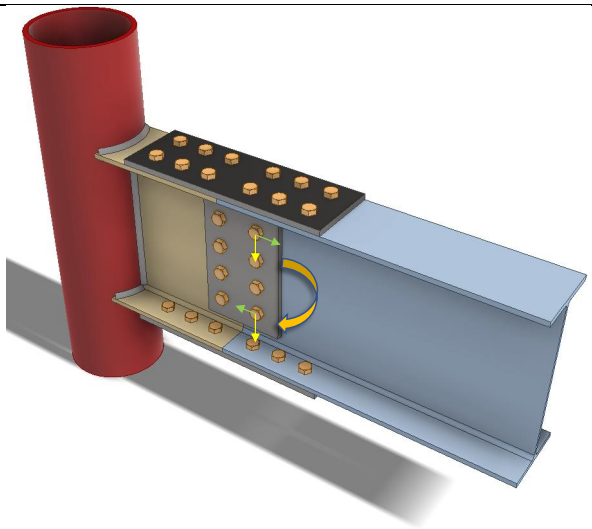 **Flange bearing resistance:** Bolt spacings in beam flange: End distance: $e_{1,f} = 60mm$ Edge distance: $e_{2,f} = 50mm$ Pitch: $p_{1,f} = 80mm$ Diameter of bolt: $d = 20mm$ Diameter of bolt hole: $d_0 = 22mm$ $k_1 = \min\left(\frac{2.8e_{2,f}}{d_0} - 1.7; 2.5\right)$ $= \min\left(2.8 \times \frac{50}{22} - 1.7; 2.5\right)$ $= 2.5$ $\alpha_b = \min\left(\frac{e_{1,f}}{3d_0}; \frac{p_{1,f}}{3d_0} - \frac{1}{4}; \frac{f_{ub}}{f_{u,b1}}; 1.0\right)$ $= \min\left(\frac{60}{3 \times 22}; \frac{80}{3 \times 22} - \frac{1}{4}; \frac{1000}{355}; 1.0\right)$ $= 0.91$	

Check 1 – Bolt group resistance		
Ref	Calculations	Remark
	Bearing resistance of beam flange: $F_{b,Rd,f} = \frac{k_1 \alpha_b f_{u,b} d t_f}{\gamma_{M2}}$ $= \frac{2.5 \times 0.91 \times 470 \times 20 \times 12.7}{1.25} \times 10^{-3}$ $= 217.05kN > F_{f,V} = 30.67kN$ **Beam web bearing:** Bolts spacings in beam web: End distance: $e_{1,b,} = 106.7mm$ Edge distance: $e_{2,b} = 60mm$ Pitch: $p_{1,b} = 80mm$ Vertical direction: $k_1 = \min\left(\frac{2.8e_{2,b}}{d_0} - 1.7; 2.5\right)$ $= \min\left(2.8 \times \frac{60}{22} - 1.7; 2.5\right)$ $= 2.5$ $\alpha_b = \min\left(\frac{e_{1,b}}{3d_0}; \frac{p_1}{3d_0} - \frac{1}{4}; \frac{f_{ub}}{f_{u,b1}}; 1.0\right)$ $= \min\left(\frac{106.7}{3 \times 22}; \frac{80}{3 \times 22} - \frac{1}{4}; \frac{1000}{470}; 1.0\right)$ $= 0.96$ Vertical bearing resistance: $F_{v,b,Rd,w} = \frac{k_1 \alpha_b f_{u,b} d t_w}{\gamma_{M2}}$ $= \frac{2.5 \times 0.96 \times 470 \times 20 \times 8.5}{1.25} \times 10^{-3}$ $= 153.75kN$	OK

Check 1 – Bolt group resistance		
Ref	Calculations	Remark
	Horizontal direction: $k_1 = \min\left(\frac{2.8e_{1,b}}{d_0} - 1.7; \frac{1.4P_1}{d_0} - 1.7; 2.5\right)$ $= \min\left(2.8 \times \frac{106.7}{22} - 1.7; 1.4 \times \frac{80}{22} - 1.7; 2.5\right)$ $= 2.5$ $\alpha_b = \min\left(\frac{e_{2,b}}{3d_0}; \frac{f_{ub}}{f_{u,b}}; 1.0\right)$ $= \min\left(\frac{60}{3 \times 22}; \frac{1000}{470}; 1.0\right)$ $= 0.91$ Horizontal bearing resistance: $F_{h,b,Rd,w} = \frac{k_1 \alpha_b f_{u,b} d t_w}{\gamma_{M2}}$ $= \frac{2.5 \times 0.91 \times 470 \times 20 \times 8.5}{1.25} \times 10^{-3}$ $= 145.27kN$ $\frac{2F_{z,V}}{F_{v,b,Rd,w}} + \frac{2F_{x,V}}{F_{h,b,Rd,w}}$ $= \frac{2 \times 18.75}{153.75} + \frac{2 \times 52.29}{145.27}$ $= 0.96 < 1$	OK
	Web cover plate bearing: Bolt spacings in web cover plate: End distance: $e_{1,wp} = 60mm$ Edge distance: $e_{2,wp} = 60mm$ Pitch: $p_{1,wp} = 80mm$	Thickness of web cover plate: $t_{wp} = 10mm$ Ultimate strength of web cover plate: $f_{u,wp} = 470MPa$

Check 1 – Bolt group resistance		
Ref	Calculations	Remark
	Vertical direction: $k_1 = \min\left(\frac{2.8e_{2,wp}}{d_0} - 1.7; 2.5\right)$ $= \min\left(2.8 \times \frac{60}{22} - 1.7; 2.5\right)$ $= 2.5$ $\alpha_b = \min\left(\frac{e_{1,wp}}{3d_0}; \frac{p_1}{3d_0} - \frac{1}{4}; \frac{f_{ub}}{f_{u,p}}; 1.0\right)$ $= \min\left(\frac{60}{3 \times 22}; \frac{80}{3 \times 22} - \frac{1}{4}; \frac{1000}{470}; 1.0\right)$ $= 0.91$ Vertical bearing resistance: $F_{v,b,Rd,wp} = \frac{k_1 \alpha_b f_{u,p} d t_{wp}}{\gamma_{M2}}$ $= \frac{2.5 \times 0.91 \times 470 \times 20 \times 10}{1.25} \times 10^{-3}$ $= 170.91kN$ Horizontal direction: $k_1 = \min\left(\frac{2.8e_{1,wp}}{d_0} - 1.7; \frac{1.4P_{1,wp}}{d_0} - 1.7; 2.5\right)$ $= \min\left(2.8 \times \frac{60}{22} - 1.7; 1.4 \times \frac{80}{22} - 1.7; 2.5\right)$ $= 2.5$ $\alpha_b = \min\left(\frac{e_{2,wp}}{3d_0}; \frac{f_{ub}}{f_{u,p}}; 1.0\right)$ $= \min\left(\frac{60}{3 \times 22}; \frac{1000}{470}; 1.0\right)$ $= 0.91$	

Check 1 – Bolt group resistance		
Ref	Calculations	Remark
	Horizontal bearing resistance: $F_{h,b,Rd,wp} = \frac{k_1 \alpha_b f_{u,p} d t_{wp}}{\gamma_{M2}}$ $= \frac{2.5 \times 0.91 \times 470 \times 20 \times 10}{1.25} \times 10^{-3}$ $= 170.91kN$ $\frac{F_{z,V}}{F_{v,b,Rd,wp}} + \frac{F_{x,V}}{F_{h,b,Rd,wp}}$ $= \frac{18.75}{170.91} + \frac{52.29}{170.91}$ $= 0.42 < 1.0$	OK
	Bolt shear resistance: Using GR.10.9, M20 bolts with: $A_s = 245mm^2, f_{ub} = 1000MPa$ Assume bolts in normal holes: $k_s = 1.0$ Slip factor (Class A friction surfaces): $\mu = 0.5$ Preloading force: $F_{p,c} = 0.7 f_{ub} A_s$ $= 0.7 \times 1000 \times 245 \times 10^{-3}$ $= 171.5kN$	$\gamma_{M3} = 1.25$ $(EN1993 - 1 - 8)$

Check 1 – Bolt group resistance		
Ref	Calculations	Remark
	The design slip resistance of a preloaded GR. 10.9 bolt: $F_{s,Rd} = \frac{k_s n \mu}{\gamma_{M3}} F_{p,c}$ $= \frac{1.0 \times 1.0 \times 0.5}{1.25} \times 171$ $= 68.6kN > \max(F_{f,v}; F_{V,Ed}) = 55.55kN$	OK

Check 2 – Resistance of tension flange and cover plate		
Ref	Calculations	Remark
SCI_P398 SS EN1993-1-8	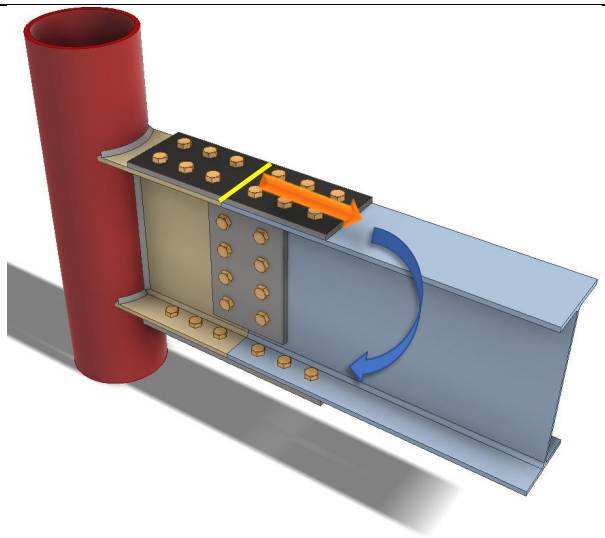 Tension flange resistance (gross area): $A_g = b_b t_f = 189.9 \times 12.7 = 2411.73mm^2$ Resistance of the gross section: $F_{pl,Rd} = \frac{A_g f_y}{\gamma_{M0}}$ $= 2411.73 \times \frac{355}{1.0} \times 10^{-3}$ $= 856.16kN$ Tension flange resistance (net area): $A_{net} = (b_b - 2d_0)t_f$ $= (189.9 - 2 \times 22) \times 12.7$ $= 1852.93mm^2$ Resistance of the net section: $F_{u,net} = \frac{0.9A_{net}f_u}{\gamma_{M2}}$ $= \frac{0.9 \times 1852.93 \times 470}{1.25} \times 10^{-3}$ $= 627.03kN$	

Check 2 – Resistance of tension flange and cover plate		
Ref	Calculations	Remark
	Resistance of tension flange: $F_{Rd,f} = \min(F_{pl,Rd}; F_{u,Rd})$ $= \min(856.16; 627.03)$ $= 627.03kN > F_{f,M} = 184.05kN$ *As the widths of beam flange and cover plate are same in this example, only the beam flange whose thickness is smaller is checked. If the widths of the flange and cover plate are different, the check above should be performed for both beam flange and cover plate.	OK

Check 3 – Resistance of compression flange and cover plate		
Ref	Calculations	Remark
	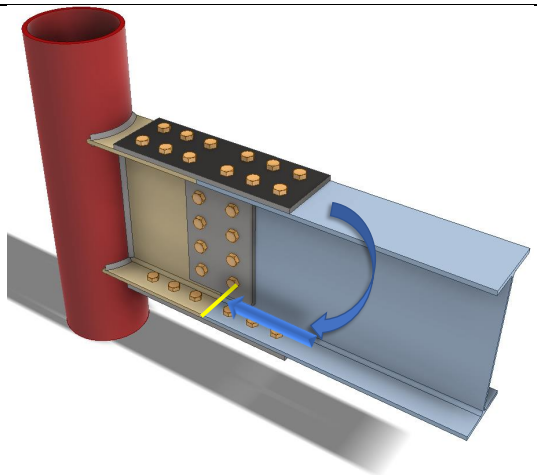	
SCI_P398 SS EN1993-1-8	According to SCI_P398, the compression resistance of the flange and cover plate may be based on gross section. Local buckling resistance of the cover plate needs to be considered when the ratio of distance between rows of bolts to thickness of plate exceed 9ε.	
	$\varepsilon = \sqrt{\frac{235}{f_{y,p}}} = \sqrt{\frac{235}{355}} = 0.814$	Thickness of the flange cover plate: $t_{fp} = 15mm$ Yield strength of the cover plate: $f_{yp} = 355MPa$
	$9\varepsilon = 9 \times 0.814 = 7.32$	
	Spacing of bolts across the joint in the direction of the bolt:	
	$p_1 = 120mm$	
	$\frac{p_1}{t_{fp}} = \frac{120}{15} = 8 > 9\varepsilon = 7.32$	
	∴ Local buckling resistance of the cover plate needs to be checked	
	$i = \frac{t_{fp}}{\sqrt{12}} = \frac{15}{\sqrt{12}} = 4.33mm$	$\alpha = 0.49$ (for solid section)
	$L_{cr} = 0.6p_1 = 0.6 \times 120 = 72mm$	
	$\lambda_1 = 93.9\varepsilon = 93.9 \times 0.814 = 76.40$	
	$\bar{\lambda} = \left(\frac{L_{cr}}{i}\right)\left(\frac{1}{\lambda_1}\right) = \left(\frac{72}{4.33}\right) \times \left(\frac{1}{76.40}\right) = 0.218$	

Check 3 – Resistance of compression flange and cover plate		
Ref	Calculations	Remark
	$\Phi = 0.5 \times \left(1 + \alpha\left(\bar{\lambda} - 0.2\right) + \overline{\lambda^2}\right)$ $= 0.5 \times (1 + 0.49 \times (0.218 - 0.2) + 0.218^2)$ $= 0.528$ Reduction factor for flexural buckling: $\chi = \dfrac{1}{\Phi + \sqrt{\left(\Phi^2 - \overline{\lambda^2}\right)}}$ $= \dfrac{1}{0.528 + \sqrt{0.528^2 - 0.218^2}}$ $= 0.991$	
	The buckling resistance of the cover plate: $N_{b,fp,Rd} = \dfrac{\chi A_{fp} f_{y,fp}}{\gamma_{M1}}$ $= 0.991 \times 2848.5 \times 355 \times 10^{-3}$ $= 1002.13kN > F_{f,M} = 184.05kN$	$A_{fp} = b_{fp} t_{fp}$ $= 189.9 \times 15$ $= 2848.5mm^2$ OK

Check 4 – Resistance of web splices		
Ref	Calculations	Remark
SCI_P398 SS EN1993-1-8	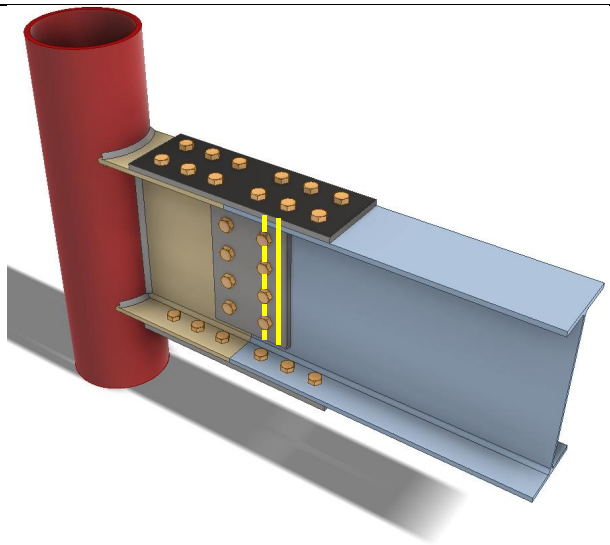 **Web cover plate dimensions and properties:** Depth: $h_{wp} = 360mm$ Thickness of cover plate: $t_{wp} = 10mm$ Yield strength of cover plate: $f_{y,wp} = 355MPa$ Ultimate strength of cover plate: $f_{u,wp} = 470MPa$ **Resistance of the web cover plate in shear:** Resistance of the gross shear area: $V_{wp,g,Rd} = \frac{h_{wp}t_{wp}}{1.27}\frac{f_{y,wp}}{\sqrt{3}\gamma_{M0}}$ $= \frac{360 \times 10 \times 355}{1.27 \times \sqrt{3}} \times 10^{-3}$ $= 580.99kN$ Net shear area: $A_{v,wp,net} = (h_{wp} - nd_0)t_{wp}$ $= (360 - 4 \times 22) \times 10$ $= 2720mm^2$	

Check 4 – Resistance of web splices		
Ref	Calculations	Remark
	Resistance of the net shear area: $V_{wp,net,Rd} = \frac{A_{v,wp,net}\left(\frac{f_{u,wp}}{\sqrt{3}}\right)}{\gamma_{M2}}$ $= 2720 \times \frac{\frac{470}{\sqrt{3}}}{1.25} \times 10^{-3}$ $= 590.47kN$ Shear resistance of the web cover plate: $V_{Rd,wp} = \min(V_{wp,g,Rd}; V_{wp,net,Rd})$ $= \min(580.99; 590.47)$ $= 580.99kN > V_{Ed} = 150kN$	OK
	Web cover plate bending resistance: Elastic modulus of web cover plate (gross section): $W_{el,wp} = \frac{t_{wp}h_{wp}^2}{4} = 10 \times \frac{360^2}{4} = 324000mm^3$ Reduction parameter for coexisting shear: $\rho = \left(\frac{2V_{Ed}}{V_{Rd,wp}} - 1\right)^2$ $= \left(2 \times \frac{150}{580.99} - 1\right)^2$ $= 0.234$ Bending resistance of web cover plate: $M_{c,wp,Rd} = \frac{W_{el,wp}(1-\rho)f_{y,wp}}{\gamma_{M0}}$ $= 324000 \times (1 - 0.234) \times 355 \times 10^{-6}$ $= 88.12kNm > M_w + M_{ecc} = 27.89kNm$	OK

Check 4 – Resistance of web splices		
Ref	Calculations	Remark
	Beam web in shear: Gross shear area of beam web: $A_{w,g} = A - 2b_b t_f + (t_w + 2r_b)t_f$ $= 8550 - 2 \times 189.9 \times 12.7 + (8.5 + 2 \times 10.2) \times 12.7$ $= 4093.57mm^2$ Resistance of the gross shear area: $V_{w,g,Rd} = \frac{A_{w,g} f_{y,w}}{\sqrt{3}}$ $= 4093.57 \times \frac{355}{\sqrt{3}} \times 10^{-3}$ $= 839.02kN$ Net shear area: $A_{w,net} = A_{w,g} - nd_0 t_w$ $= 4093.57 - 4 \times 22 \times 8.5$ $= 3345.57mm^2$ Resistance of the net shear area: $V_{w,n,Rd} = \frac{A_{v,net}\left(\frac{f_{u,w}}{\sqrt{3}}\right)}{\gamma_{M2}}$ $= 3345.57 \times \frac{\frac{470}{\sqrt{3}}}{1.25} \times 10^{-3}$ $= 726.27kN$	

Check 4 – Resistance of web splices		
Ref	Calculations	Remark
	Shear resistance of beam web: $V_{w,Rd} = \min(V_{w,g,Rd}; V_{w,n,Rd})$ $= \min(839.02; 726.27)$ $= 726.27kN > V_{Ed} = 150kN$	OK

Check 5 – Resistance of the circular hollow section column (CHS)		
Ref	Calculations	Remark
	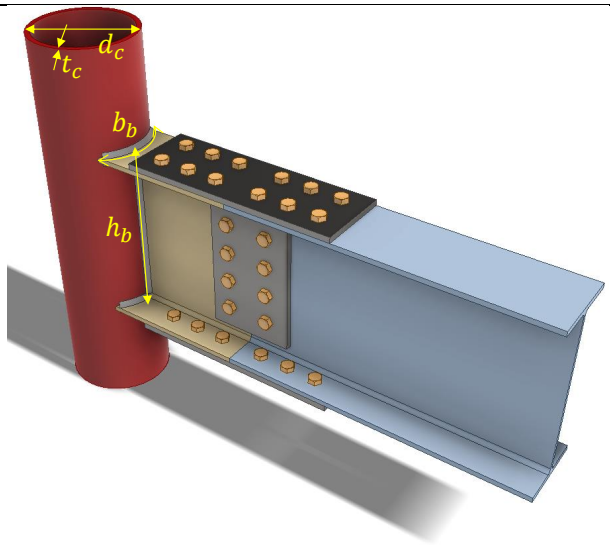	
SS EN1993-1-8	For CHS 273×12.5: Diameter: $d_c = 273mm$ Wall thickness: $t_c = 12.5mm$ Yield strength: $f_{y,c} = 355MPa$ Ultimate strength: $f_{u,c} = 470MPa$	
Table 7.1 and Table 7.4	Range of validity: $10 < \frac{d_c}{t_c} = 21.84 < 50$	OK
	$\beta = \frac{b_b}{d_c} = \frac{189.9}{273} = 0.696 > 0.4$	OK
	$\eta = \frac{h_b}{d_c} = \frac{453.4}{273} = 1.66 < 4$	OK
	As the axial force on CHS column is unknown, k_p is assumed to be 1. Axial resistance of I beam connects to CHS: $N_{1,Rd} = \frac{k_p f_{y,c} t_c^2 (4 + 20\beta^2)(1 + 0.25\eta)}{\gamma_{M5}}$ $= (1.0 \times 355 \times 12.5^2 \times (4 + 20 \times 0.696) \times (1 + 0.25 \times 1.66) \times 10^{-3}$ $= 1073.66kN$	

Check 5 – Resistance of the circular hollow section column (CHS)		
Ref	Calculations	Remark
	$M_{1,Rd} = h_b N_{1,Rd}/(1+0.25\eta)$ $= \frac{453.4 \times 1073.66}{1+0.25 \times 1.66} \times 10^{-3}$ $= 343.98kNm$ Eccentricity between the CHS surface and beam splice: $ecc_2 = 380mm$ Applied moment on CHS surface: $M_{Ed,chs} = M_{Ed} + V_{Ed}ecc_2$ $= 100 + 150 \times 380 \times 10^{-3}$ $= 157kNm < M_{1,Rd} = 343.98kNm$	OK
	Punching shear resistance: As $\eta < 2$, $\frac{M_{Ed,chs}}{W_{el,y}} t_f = \frac{157}{1300000} \times 12.7 \times 10^3$ $= 1.534kN/mm$ $\frac{2t_c\left(\frac{f_{y,c}}{\sqrt{3}}\right)}{\gamma_{M5}} = 2 \times 12.5 \times \frac{355}{\sqrt{3}} \times 10^{-3}$ $= 5.124kN/mm > 1.534kN/mm$	OK

Note:

If the bending and punching resistance of CHS are insufficient, local strengthening with doubler plate may be used. According to Chinese Technical specification for structures with steel hollow sections (CECS 280:2010) clause 7.3.4, the doubler plate should be at least 4mm thick and cover at least half of the hollow section. In addition, the edge of the plate should be at least 50mm away from the welding but not greater than 2/3 of the height of the I beam.

4.6 Connection of I-beam to hollow steel columns using diaphragm plates

Diaphragm plates and web plates may be pre-welded to the hollow section at the factory so that bolted beam-splice can be installed at the site. This is the preferred way to provide moment connection of I beam to tubular column. Sharpe corners of diaphragm plates should be avoided as this will result in stress concentration. As such type of connections is moment resisting connection, hollow steel column should be checked for unbalanced forces especially for edge and corner columns.

4.6.1 Example 6 – I-beam to hollow steel columns with diaphragm plates

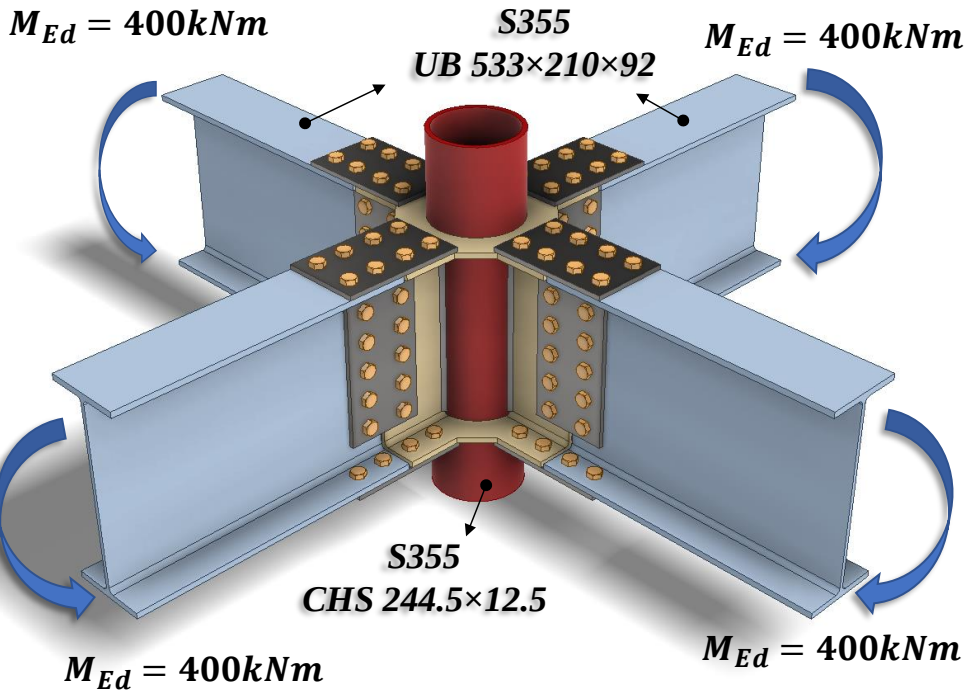

Design loading:

Major axis bending moment: $M_{Ed} = 400kNm$

Dimensions and properties		
Ref	Calculations	Remark
	For S355 UB 533x210x92: Depth: $h_b = 533.1mm$ Width: $b_b = 209.3mm$ Thickness of flange: $t_f = 15.6mm$ Yield strength: $f_{y,b} = 355MPa$ Ultimate strength: $f_{u,b} = 470MPa$ For S355 CHS 244.5x12.5: Diameter: $d_c = 244.5mm$ Thickness: $t_c = 12.5mm$ Yield strength: $f_{y,c} = 355MPa$ Ultimate strength: $f_{u,c} = 470MPa$ For S355 external diaphragm ring: To allow for construction inaccuracies, the thickness of the diaphragm ring is designed to be slightly thicker than the thickness of flange of the I beam. Thickness: $t_p = 20mm > t_f = 15.6mm$ Yield strength: $f_{yp} = 345MPa$ Ultimate strength: $f_{up} = 470MPa$	

As Eurocode does not provide guideline on designing the width and thickness of the external diaphragm ring for I beam to CHS connection, CIDECT design guides and Chinese technical codes (GB 50936-2014) are referred and the calculations are shown below.

CIDECT design guide 9		
Ref	Calculations	Remark
CIDECT design guide 9	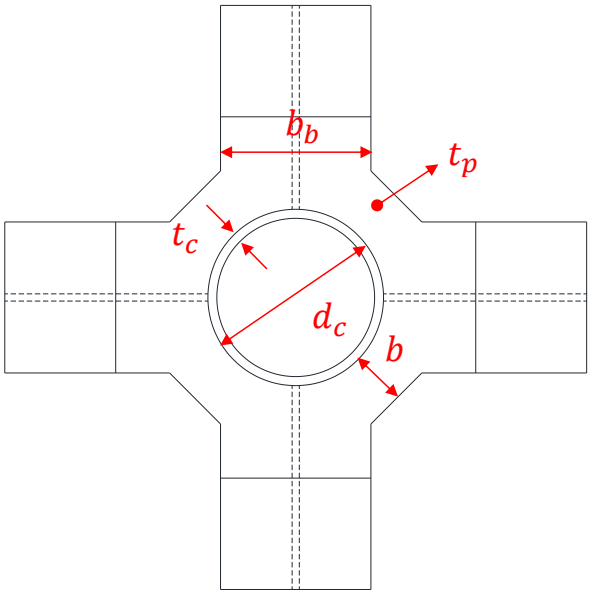 Axial resistance of diaphragm ring: $N_{Rd} = 19.6\left(\frac{d_c}{t_c}\right)^{-1.54}\left(\frac{b}{d_c}\right)^{0.14}\left(\frac{t_p}{t_c}\right)^{0.34}\left(\frac{d_c}{2}\right)^{2} f_{yc}$ $= 19.6\left(\frac{244.5}{12.5}\right)^{-1.54}\left(\frac{b}{244.5}\right)^{0.14}\left(\frac{20}{12.5}\right)^{0.34}$ $\times\left(\frac{244.5}{2}\right)^{2} \times 355 \times 10^{-3}$ $= 1252.20\left(\frac{b}{244.5}\right)^{0.14}$ For $N_{Ed} = 772.95kN$ and to meet the range of validity: $b = 15mm$ $N_{Rd} = 1252.20 \times \left(\frac{15}{244.5}\right)^{0.14}$ $= 847.17kN > N_{Ed}$ Range of validity: $14 \leq \frac{d_c}{t_c} = \frac{244.5}{12.5} = 19.56 \leq 36$	

CIDECT design guide 9		
Ref	Calculations	Remark
	$0.05 \leq \frac{b}{d_c} = \frac{15}{244.5} = 0.06 \leq 0.14$ $0.75 \leq \frac{t_p}{t_c} = \frac{20}{12.5} = 1.6 \leq 2.0$ Additional requirement: As CIDECT suggests, the angle of transition between beam flange and external diaphragm ring should be limited to 30°. In this example, the larger transition angle (45°) may result in stress concentration. 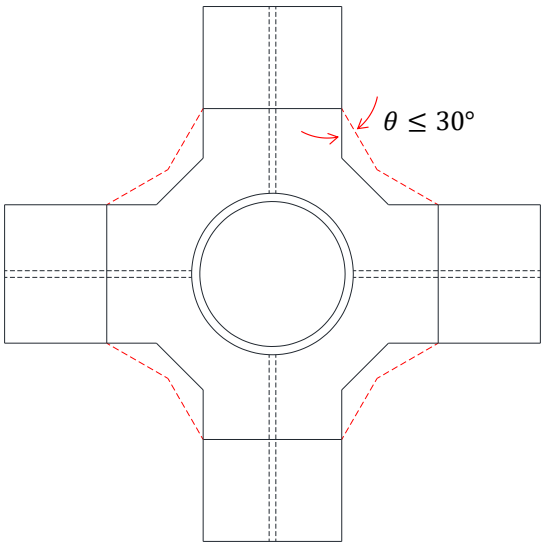	

Note:

The design methods shown above cannot be simply applied to all types of external diaphragm rings. The range of validity and additional requirements from the codes need to be fulfilled when doing the design.

GB 50936:2014 – Technical code for concrete filled steel tubular structures		
Ref	Calculations	Remark
GB 50936-2014 Annex C	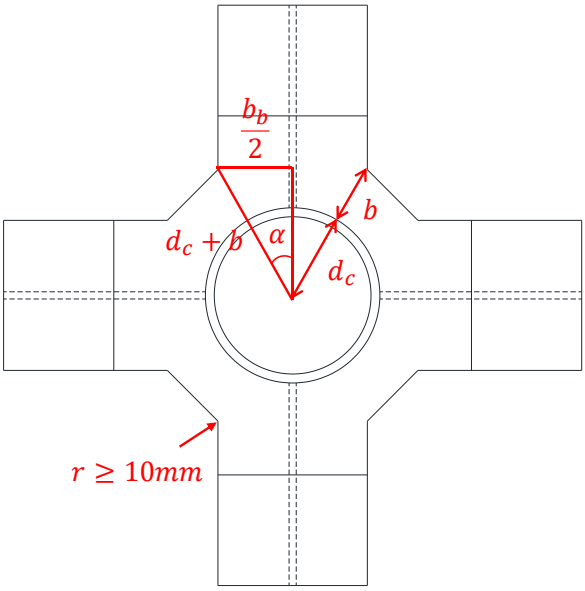 Angle between axial force on flange and cross section: $\alpha = \sin^{-1}\left(\frac{\frac{b_b}{2}}{d_c + b}\right)$ Effective width of external diaphragm ring: $b_e = \left(0.63 + \frac{0.88 b_b}{d_c}\right)\sqrt{d_c t_c} + t_p$ $= \left(0.63 + \frac{0.88 \times 209.3}{244.5}\right) \times \sqrt{244.5 \times 12.5} + 20$ $= 96.47mm$ Applied axial force: $N_{Ed} = \frac{M_{Ed}}{h_b - t_f}$ $= \frac{400}{533.1 - 15.6} \times 10^3$ $= 772.95kN$	Note: r : transition radius between beam and diaphragm plate depends upon execution class

GB 50936:2014 – Technical code for concrete filled steel tubular structures		
Ref	Calculations	Remark
	$F_1(\alpha) = \frac{0.93}{\sqrt{2\sin^2\alpha + 1}}$ $F_2(\alpha) = \frac{1.74\sin\alpha}{\sqrt{2\sin^2\alpha + 1}}$ Minimum width required: $b \geq \frac{F_1(\alpha)N_{Ed}}{t_p f_p} - \frac{F_2(\alpha)b_e t_c f_c}{t_p f_p}$ As both sides of the inequation affected by the unknown b, iteration is required. After iteration, for $N_{Ed} = 772.95kN$, $b = 65mm$ Additional requirement: To minimize the effect of stress concentration, the radius between the I beam flange and diaphragm ring should be at lease 10mm. Range of validity: $0.25 < \frac{b_e}{d_c} = \frac{96.47}{244.5} = 0.40 < 0.75$ $0.10 < \frac{b}{d_c} = \frac{65}{244.5} = 0.27 < 0.35$ $\frac{b}{t_p} = 3.25 < 10$ As the equations used above need to fulfill the range of validity, for high applied axial force, this method of calculation may not be appropriate.	

5 Bracing connections

5.1 Introduction

Bracing connections are typically constructed using sectional shapes like hollow sections, Universal section (I or H sections), channels and angles resisting tension or compression. The bracings are typically connected to the main members via gusset plates using bolts. If the wind loads are not high, steel rods may be used as tension members to provide lateral load resistance. Steel rods are more economical compared to structural steel sections and they can be easily installed on site. Steel rods are lighter and most of the time can be installed without the use of cranes. Turn-buckle system may be used to pre-tensioned the rod to prevent slackening. This section gives suggestions of how steel rods are to be detailed and design to improve productivity in fabrication and installation.

5.2 Materials

The steel rods and welded plates are recommended to be of BC1's certified materials. Two types of turn-buckle systems connecting to steel rod is shown in Figure *5-1*. As the rods are welded to turnbuckles attachments, it is recommended to use the more weldable mild steel rod such as S275 steel. The use of high tensile rod is not recommended. Engineers are recommended to specific 100% NDT on the welds and performance tests may be carried out to verify its structural performance.

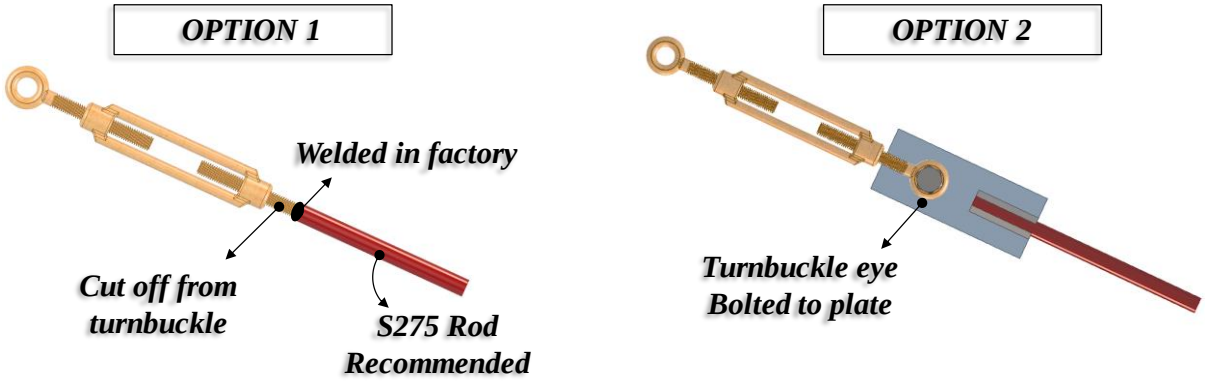

Figure 5-1 Two options of connecting a turn-buckle system to a steel rod

5.3 Design and Detailing

Figure *5-2* shows two ways of welding a steel rod to a steel plate. The design and detailing recommendations pertaining to the connection of the steel rod to the gusset plate are as follows:

1. The welds should be designed to resist 2 times the tension force
2. Option 1 – Flare groove welds to be designed as per cl. 4.3.6 EC3-8. Qualified welding procedure should be carried out for this weld. For this option, there may be eccentricity between the applied forces and the weld. The weld should be checked against the moment induced by the eccentric load.
3. Option 2 – The rod diameter should be at least double the plate thickness to allow for sufficient welding. The weld should be designed as per fillet weld.

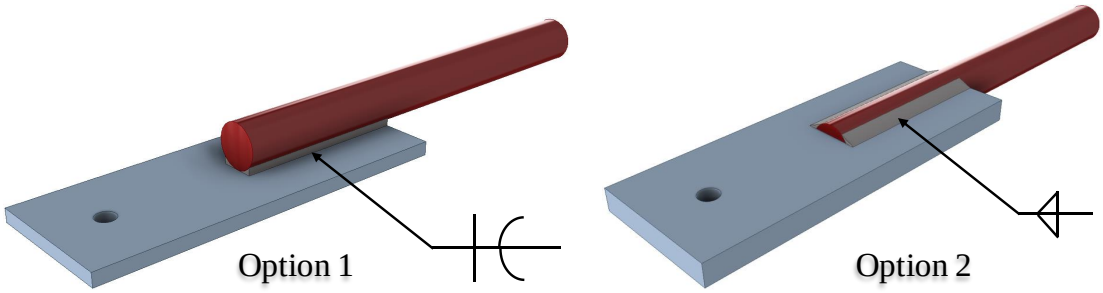

Figure 5-2 Welding of steel rod to a plate (a) Option 1: single sided flare groove weld (b) Option 2: double sided fillet welds (preferred)

- For Option 1, the connection should be reviewed if there is a large horizontal force acting onto the connection.
- For erection purpose, two bolts are preferred.

5.3.1 Example 1 – Welding of steel rod to a steel plate

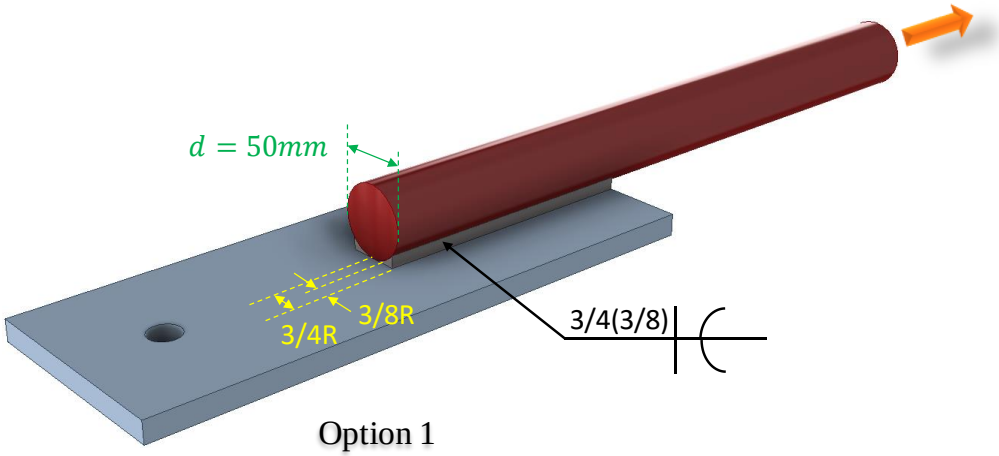

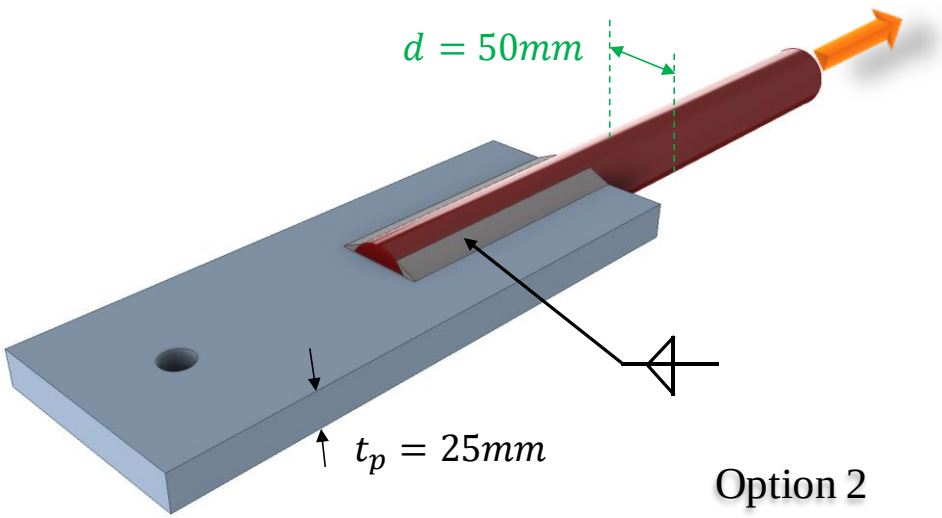

Design tension load:

$F_{Ed} = 200kN$

Option 1		
Ref	Calculations	Remark
SS EN1993-1-8 AWS D1.1:2015	For option 1, flare-bevel-groove welds are used to connect the tension rod to the plate. Radius of tension rod: $R = 25mm$ According to the guide from the American Welding Society, the effective weld sizes of flare groove welds is assumed to be 3/8 of the radius of tension rod for gas metal arc welding (GMAW). 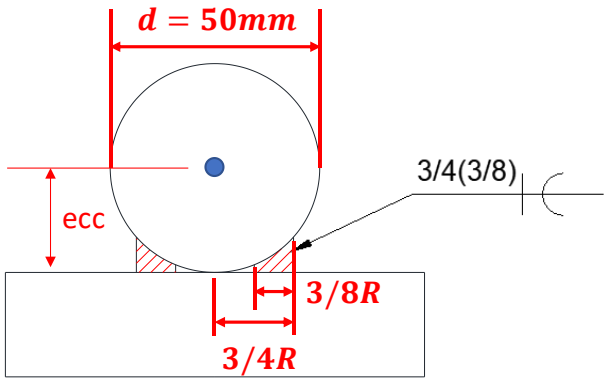 Flare-bevel-groove welds (Option 1) Effective throat thickness of flare-bevel-groove weld: $a = \left(\frac{3}{8}\right) R = 25 \times \frac{3}{8} = 9.375mm$ Design shear strength of the weld: $f_{vw,d} = \frac{f_u}{\sqrt{3}\beta_w \gamma_{M2}}$ $= \frac{410}{\sqrt{3} \times 0.85 \times 1.25}$ $= 222.79MPa$ Design longitudinal resistance: $F_{w,L,Rd} = f_{vw,d} a = 222.79 \times 9.375 \times 10^{-3}$ $= 2.09kN/mm$	For S275 weld: $f_u = 410MPa$ $\beta = 0.85$ $\gamma_{M2} = 1.25$ (SS EN1993-1-8)

Option 1		
Ref	Calculations	Remark
	Cross-section area of tension rod: $A = \pi R^2 = \pi \times 25^2 = 1963.50mm^2$ Tension capacity of tension rod: $F_{Rd} = f_y A = 275 \times 1963.50 \times 10^{-3}$ $= 539.96kN > F_{Ed} = 200kN$ The weld is designed to resist two times the tension force applied. The weld length is calculated as: $L_w = \frac{2F_{Ed}}{2F_{w,L,Rd}} = \frac{2 \times 200}{2 \times 2.09} = 95.69mm$ $\therefore L_w = 150mm$ 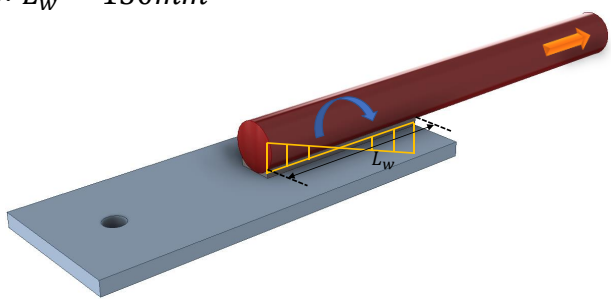 Assume the eccentricity between the applied force and flare-bevel-groove weld to be the radius of the tension rod: $ecc = R = 25mm$ Applied moment on the weld: $M_{Ed} = 2F_{Ed}ecc$ $= 400 \times 25 \times 10^{-3}$ $= 10kNm$ Polar moment of inertia of weld: $J = \frac{L_w^3}{12} = \frac{192^3}{12} = 589824mm^3$	For S275 tension rod: $f_y = 275MPa$

Option 1		
Ref	Calculations	Remark
	Applied transverse stress: $\tau_T = \frac{M_{Ed} L_w}{2 \times 2J} = \frac{10 \times 150}{2 \times 2 \times 589824} \times 10^3$ $= 0.636 kN/mm$ Applied longitudinal stress: $\tau_L = \frac{2F_{Ed}}{2L_w} = \frac{400}{2 \times 150} = 1.33 kN/mm$ Design transverse resistance: $F_{w,T,Rd} = KF_{w,L,Rd}$ $= 1.225 \times 2.09 = 2.56 kN/mm$ Directional method: $SF = \left(\frac{\tau_L}{F_{w,L,Rd}}\right)^2 + \left(\frac{\tau_T}{F_{w,T,Rd}}\right)^2$ $= \left(\frac{1.33}{2.09}\right)^2 + \left(\frac{0.636}{2.56}\right)^2 = 0.47 < 1.00$	Assume angle between applied transverse stress and effect throat area: $\theta = 45°$ $\therefore K = 1.225$ OK

Note:

As flare-bevel-groove weld is one side weld, there will be eccentricity between applied force and weld and the applied moment may induce extra stress on the welding. If the gusset plate is thick and the tension rod is large, the induced moment is large and hence it is not recommended to use option 1 for bracing connection.

Option 2		
Ref	Calculations	Remark
EN1933-1-8	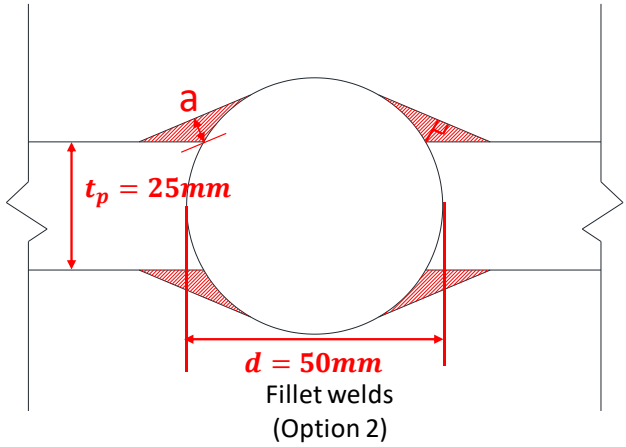 The effective throat a is taken as the perpendicular distance from the root of the weld to a straight line joining the fusion faces. In this example, $a = 5mm$ Design longitudinal resistance: $F_{w,L,Rd} = f_{vw,d}a = 222.79 \times 5 \times 10^{-3}$ $= 1.11kN/mm$ Fillet weld length: $L_w = \frac{2F_{Ed}}{4F_{w,L,Rd}} = \frac{2 \times 200}{4 \times 1.11} = 90mm$ $\therefore L_w = 100mm$	

5.4 Gusset plates to main members

As the intersection where the main members and the gusset plates, the connection could be quite congested. It is recommended to allow for some load eccentricity for the ease of fabrication and installation. Engineers should design for the effect of load eccentricity by referring to SCI P358 "Joint in Steel Construction Simple Joints to Eurocode 3" Section 8.

5.4.1 Example 2 – Turn buckle and gusset plate connection

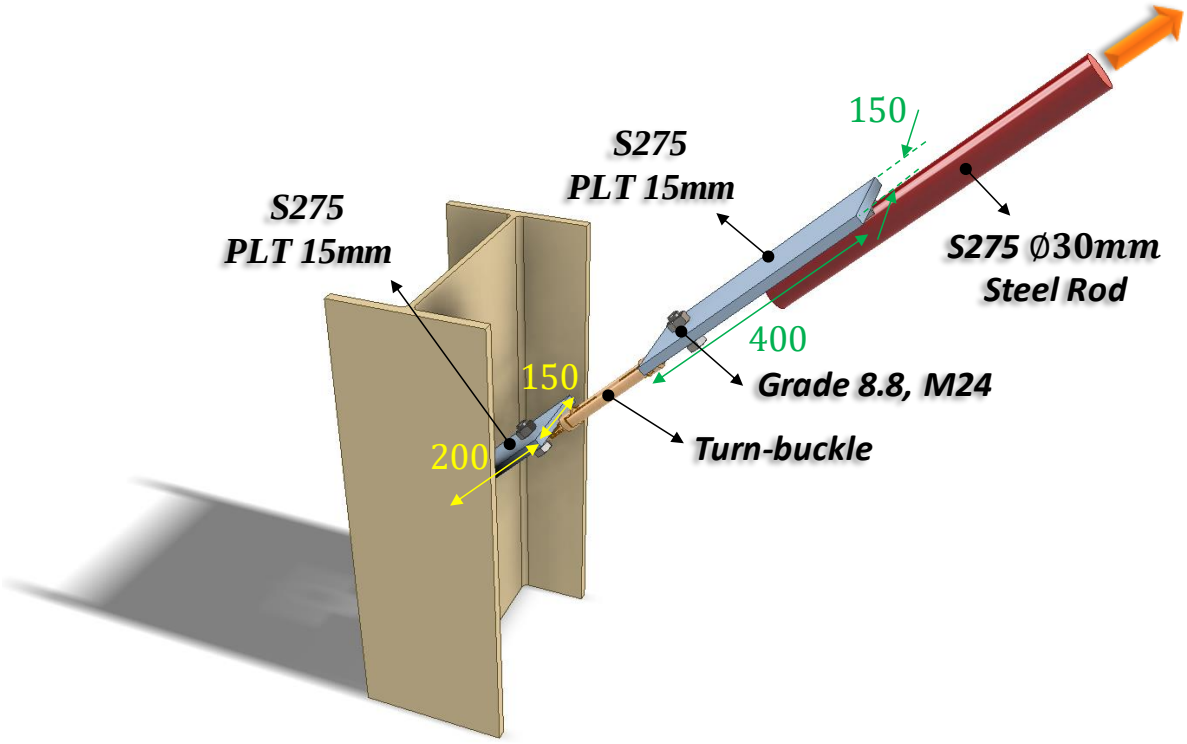

Design loading:

Tensile force: $F_{Ed} = 80kN$

Check 1 – Gusset plate tensile resistance		
Ref	Calculations	Remark
SS EN1993-1-8	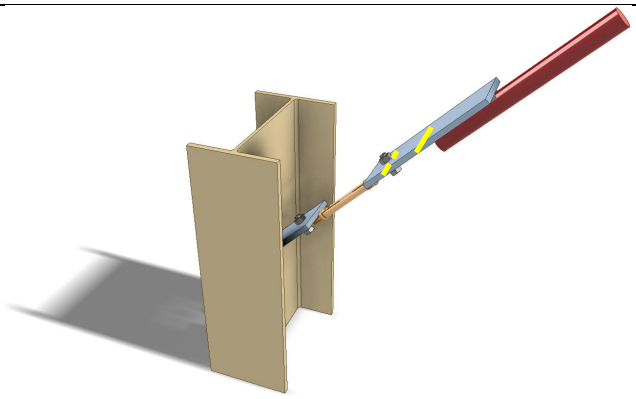 For S275 PLT 15mm: Width of the plate: $b_p = 120mm$ Length of the plate: $L_p = 400mm$ Thickness of the plate: $t_p = 10mm$ Yield strength: $f_{yp} = 275MPa$ Ultimate strength: $f_{up} = 410MPa$ Bolt hole diameter: $d_0 = 26mm$ Gross section area: $A_g = b_p t_p$ $= 120 \times 10 = 1200mm^2$ Gross section resistance: $F_{pl,Rd} = \frac{A_g f_{yp}}{\gamma_{M0}}$ $= \frac{1200 \times 275}{1.0} \times 10^{-3}$ $= 330kN$ Net section area: $A_{net} = A_g - d_0 t_p$ $= 1200 - 26 \times 10$ $= 940mm^2$	

Check 1 – Gusset plate tensile resistance		
Ref	Calculations	Remark
	Net section resistance: $F_{u,Rd} = \frac{0.9 f_{up} A_{net}}{\gamma_{M2}}$ $= \frac{0.9 \times 410 \times 940}{1.25} \times 10^{-3}$ $= 227.49kN$ Tensile resistance of the connecting plate: $F_{Rd} = \min(F_{pl,Rd}; F_{u,Rd})$ $= \min(330; 277.49)$ $= 277.49kN > F_{Ed} = 80kN$	 OK

Check 2 – Bolt resistance		
Ref	Calculations	Remark
SS EN1993-1-8	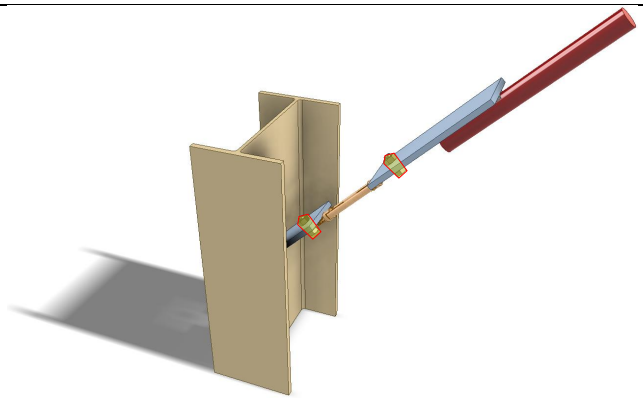 Using class 8.8, M24 bolts with: $A_s = 353mm^2$, $f_{ub} = 800MPa$, $\alpha_v = 0.6$ Shear resistance of bolt: $F_{v,Rd} = \frac{\alpha_v f_{ub} A_s}{\gamma_{M2}}$ $= \frac{0.6 \times 800 \times 353}{1.25} \times 10^{-3}$ $= 135.55kN$ $k_1 = \min\left(\frac{2.8e_2}{d_0} - 1.7; 2.5\right)$ $= \min\left(2.8 \times \frac{75}{26} - 1.7; 2.5\right)$ $= 2.5$ $\alpha_b = \min\left(\frac{e_1}{3d_0}; \frac{f_{ub}}{f_{up}}; 1.0\right)$ $= \min\left(\frac{60}{3 \times 26}; \frac{800}{410}; 1.0\right)$ $= 0.91$	Bolt spacing: End distance: $e_1 = 60mm$ Edge distance: $e_2 = 75mm$

Check 2 – Bolt resistance		
Ref	Calculations	Remark
	Bearing resistance of connecting plate: $F_{b,Rd} = \frac{k_1 \alpha_b f_{up} dt}{\gamma_{M2}}$ $= \frac{2.5 \times 0.91 \times 410 \times 24 \times 10}{1.25} \times 10^{-3}$ $= 178.91kN$ Resistance of the bolt joint: $F_{Rd} = \min(F_{v,Rd}; F_{b,Rd}) = \min(135.55; 178.91)$ $= 135.55kN > F_{Ed} = 80kN$	 OK

Check 3 – Weld resistance		
Ref	Calculations	Remark
SS EN1993-1-8	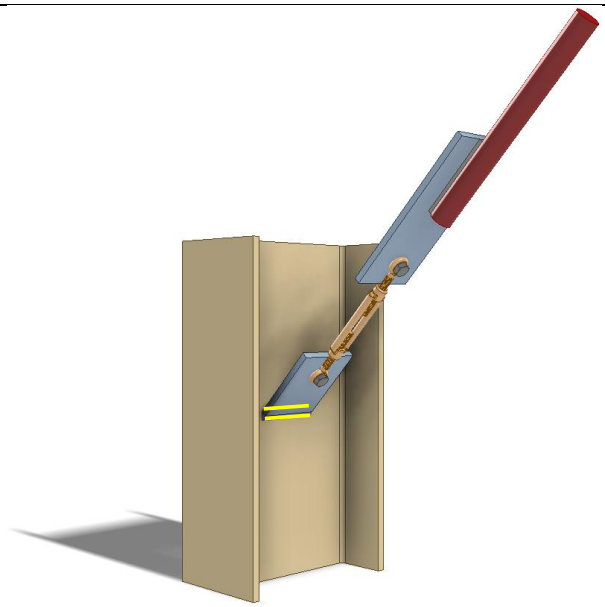 Choose S275 fillet weld with 10mm leg length: Top part: Angle between the gusset plate and beam web: $\gamma_1 = 60°$ Throat thickness: $a = s \cdot \cos\left(\frac{\gamma}{2}\right) = 10 \times \cos\left(\frac{60°}{2}\right) = 8.66mm$ Design shear strength: $f_{vw,d} = \frac{f_u/\sqrt{3}}{\beta_w \gamma_{M2}}$ $= \frac{410/\sqrt{3}}{0.9 \times 1.25}$ $= 210.41MPa$ Design longitudinal resistance per unit length: $F_{w,L,Rd1} = f_{vw,d} a = 210.41 \times 8.66 \times 10^{-3}$ $= 1.82kN/mm$	

Check 3 – Weld resistance		
Ref	Calculations	Remark
	$K = \sqrt{\frac{3}{1 + 2\cos^2\theta}}$ $= \sqrt{\frac{3}{1 + 2\cos^2(30°)}}$ $= 1.10$ Design transverse resistance per unit length: $F_{w,T,Rd1} = KF_{w,L,Rd} = 1.10 \times 1.82$ $= 2.00kN/mm$ Bottom part: Angle between the tension member and chord: $\gamma_2 = 120°$ Throat thickness: $a = s \cdot \cos\left(\frac{\gamma}{2}\right) = 10 \times \cos\left(\frac{120°}{2}\right) = 5.0mm$ Design longitudinal resistance per unit length: $F_{w,L,Rd2} = f_{vw,d}a = 210.41 \times 5.0 \times 10^{-3}$ $= 1.05kN/mm$ $K = \sqrt{\frac{3}{1 + 2\cos^2\theta}}$ $= \sqrt{\frac{3}{1 + 2\cos^2(60°)}}$ $= 1.41$ Design transverse resistance per unit length: $F_{w,T,Rd2} = KF_{w,L,Rd} = 1.41 \times 1.05$ $= 1.48kN/mm$	

Check 3 – Weld resistance		
Ref	Calculations	Remark
	Weld resistance: $F_{Rd} = b_p\left(F_{w,Rd,1} + F_{w,Rd,2}\right)$ $= 120 \times (2.00 + 1.48)$ $= 417.6kN > F_{Ed} = 80kN$	

Beside tie rod, gusset plate may be used to connected other types of bracing members such as I-beam. The Whitmore section is used to determine the stress distribution within the gusset plate. The Whitmore section effective width and length can be calculated by spreading the force from the start of the joint, 30° to each side in the connecting element along the line of forces. Figure *5-3* shows a typical example of Whitmore section. In the situation that the gusset plate experiences a compression force, the buckling resistance of the gusset plate may be calculated using Whitmore section. Moreover, the Whitmore effective width may be used to calculate the tensile resistance of the gusset plate.

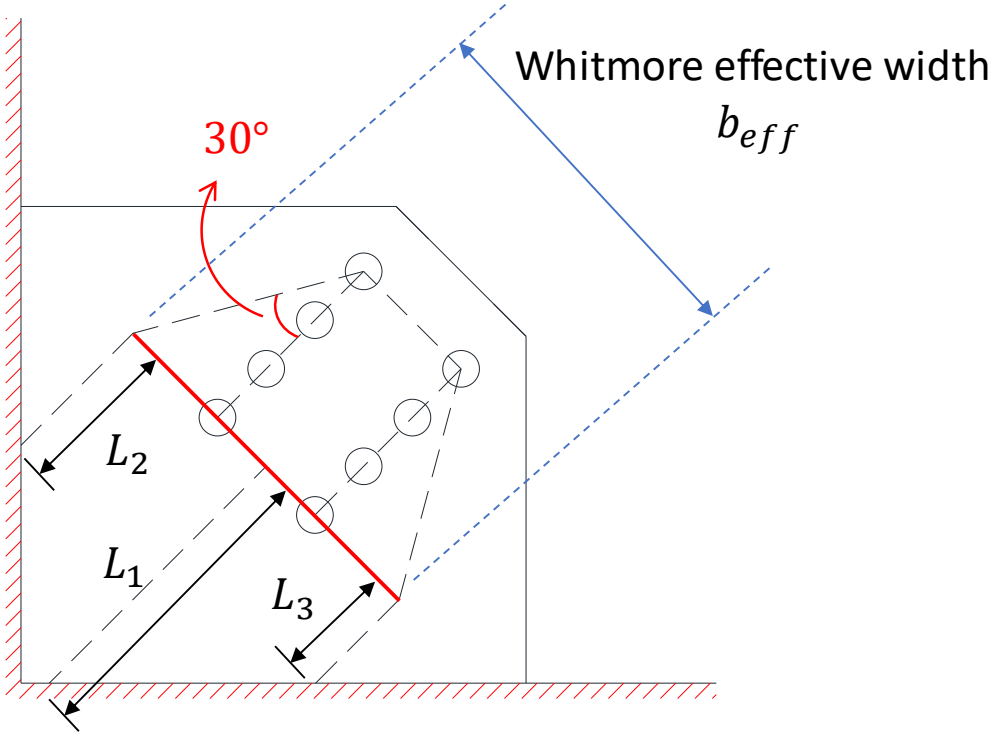

Figure 5-3 Example of the Whitmore section

5.4.2 Example 3 – Gusset plate connection for bracing type 2

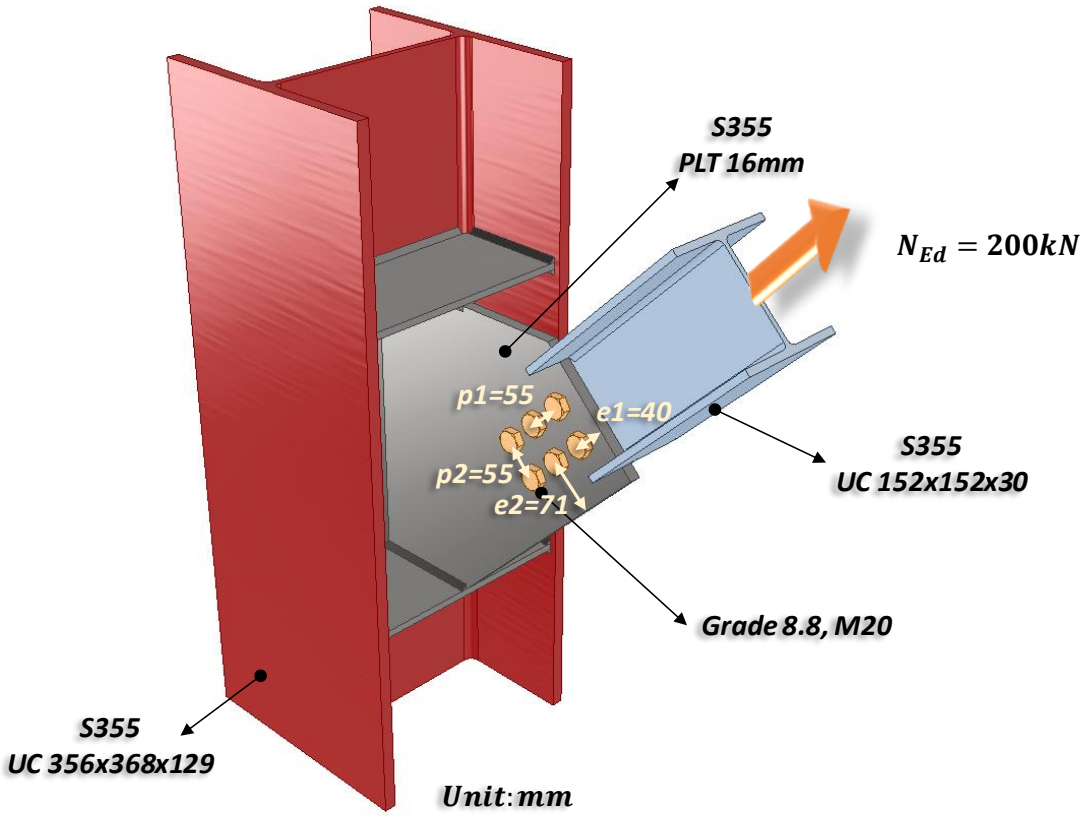

Check 1 – Bolt group resistance		
Ref	Calculations	Remark
SS EN1993-1-8	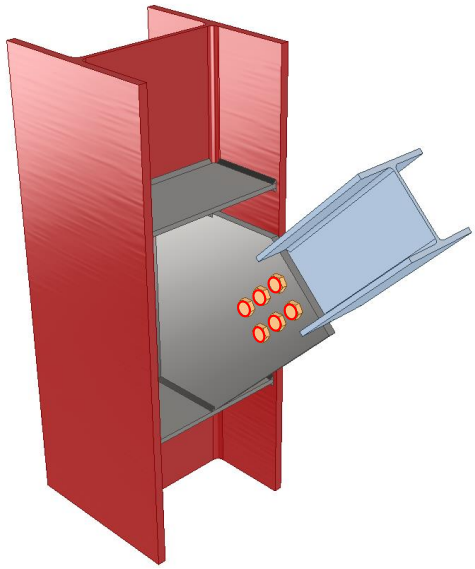 **Bolt resistance:** Using Gr8.8, M20 bolts with: $A_s = 245mm^2; f_{ub} = 800MPa;$ **Shear resistance of a single bolt:** $F_{v,Rd} = \frac{\alpha_v f_{ub} A_s}{\gamma_{M2}}$ $= \frac{0.6 \times 800 \times 245}{1.25} \times 10^{-3}$ $= 94.08kN$ **Bearing resistance on plate and beam web:** $\alpha_b = \min\left(\frac{e_1}{3d_0}; \frac{p_1}{3d_0} - \frac{1}{4}; \frac{f_{ub}}{f_u}; 1.0\right)$ $= \min\left(\frac{36}{3 \times 22}; \frac{55}{3 \times 22} - \frac{1}{4}; \frac{800}{490}; 1.0\right)$ $= 0.5455$ $k_1 = \min\left(\frac{2.8e_2}{d_0} - 1.7; \frac{1.4p_2}{d_0} - 1.7; 2.5\right)$ $= \min\left(\frac{2.8 \times 35}{22} - 1.7; \frac{1.4 \times 55}{22} - 1.7; 2.5\right)$ $= 1.8$	For class 8.8: $\alpha_v = 0.6$ $\gamma_{M2} = 1.25$ (refer to NA to SS) $\boldsymbol{e_1 = 36.0mm}$ $(1.2d_0 < e_1 < 4t + 40mm)$ $\boldsymbol{p_1 = 55.0mm}$ $(2.2d_0 < p_1 < 14t\ or\ 200mm)$ $\boldsymbol{e_2 = 35.0mm}$ $(1.2d_0 < e_2 < 4t + 40mm)$ $\boldsymbol{p_2 = 55.0mm}$ $(2.4d_0 < p_2 < 14t\ or\ 200mm)$ $t_{tab} = 12.5mm$ $t_{tab} < 16mm$ $f_{u,tab} = 490MPa$

Check 1 – Bolt group resistance		
Ref	Calculations	Remark
	$F_{b,Rd,tab} = \frac{k_1 \alpha_b f_{u,tab} d t_{tab}}{\gamma_{M2}}$ $= \frac{1.8 \times 0.5455 \times 490 \times 20 \times 12.5}{1.25}$ $= 96.22kN$	$f_{y,tab} = 355MPa$
	Bearing resistance on gusset plate: $\alpha_b = \min\left(\frac{e_1}{3d_0}; \frac{p_1}{3d_0} - \frac{1}{4}; \frac{f_{ub}}{f_u}; 1.0\right)$ $= \min\left(\frac{40}{3 \times 22}; \frac{55}{3 \times 22} - \frac{1}{4}; \frac{800}{490}; 1.0\right)$ $= 0.5833$ $k_1 = \min\left(\frac{2.8e_2}{d_0} - 1.7; \frac{1.4p_2}{d_0} - 1.7; 2.5\right)$ $= \min\left(\frac{2.8 \times 71}{22} - 1.7; \frac{1.4 \times 55}{22} - 1.7; 2.5\right)$ $= 1.8$ $F_{b,Rd,guss} = \frac{k_1 \alpha_b f_{u,guss} d t_{guss}}{\gamma_{M2}}$ $= \frac{1.8 \times 0.5833 \times 490 \times 20 \times 16}{1.25}$ $= 131.71kN$	$\boldsymbol{e_{1,g} = 40.0mm}$ $\boldsymbol{p_{1,g} = 55.0mm}$ $\boldsymbol{e_{2,g} = 71.0mm}$ $\boldsymbol{p_{2,g} = 55.0mm}$ $t_{guss} = 16.0mm$ $t_{guss} < 16mm$ $f_{u,guss} = 490MPa$ $f_{y,guss} = 355MPa$
	Design capacity of each bolt: $F_{Rd} = \min(F_{v,Rd}, F_{b,Rd,tab}, F_{b,Rd,guss})$ $= \min(94.08, 96.22, 131.71)$ $= 94.08kN$	
	Design capacity of the bolt group: $N_{Rd} = nF_{Rd}$ $= 6 \times 94.08$ $= 564.48kN > N_{Ed} = 200kN$	**OK**

Check 2 – Beam web tensile resistance		
Ref	Calculations	Remark
SS EN1993	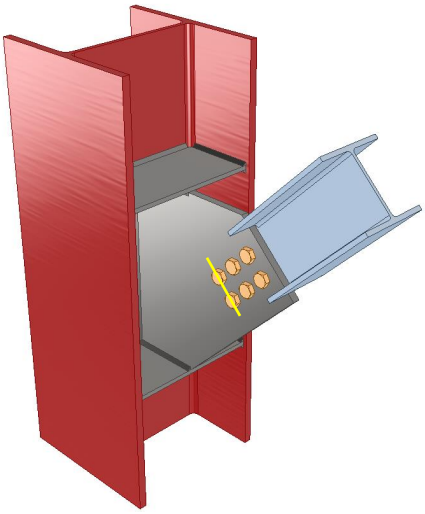 **Beam web cross section resistance:** Gross area of beam web: $A_g = h_p t_{tab}$ $= 125 \times 12.5$ $= 1562.5mm^2$ Tensile resistance: $F_{Rd,g} = \frac{A_g f_{y,tab}}{\gamma_{M0}}$ $= \frac{1562.5 \times 355}{1.0} \times 10^{-3}$ $= 554.69kN$ **Beam web net section resistance:** Net shear area of beam web: $A_{net} = A_g - n_2 d_0 t_{tab}$ $= 1562.5 - 2 \times 22 \times 12.5$ $= 1012.5mm^2$ $F_{Rd,n} = \frac{0.9 A_{net} f_{u,tab}}{\gamma_{M2}}$ $= \frac{0.9 \times 1012.5 \times 490}{1.25} \times 10^{-3}$ $= 357.21kN$	$h_p = 125.0mm$ $\gamma_{M0} = 1.0$ (SS EN1993-1-1)

Check 2 – Beam web tensile resistance		
Ref	Calculations	Remark
	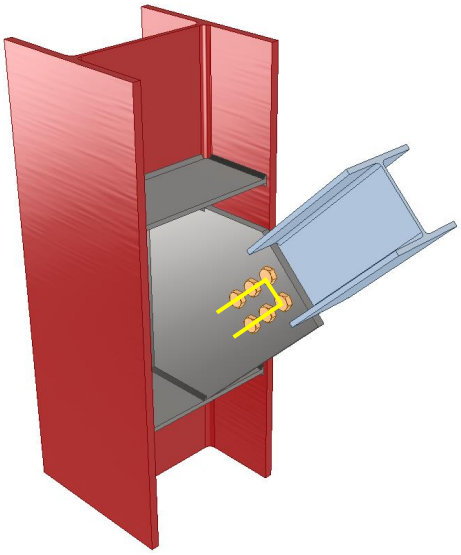 **Beam web block shear tearing resistance:** Net area subjected to tension: $A_{nt} = (p_2 - d_0)t_{tab}$ $= (55 - 22) \times 12.5$ $= 412.5mm^2$ Net area subjected to shear: $A_{nv} = 2(2p_1 + e_1 - 1.5d_0)t_{tab}$ $= 2 \times (55 \times 2 + 36 - 2.5 \times 22) \times 12.5$ $= 2275mm^2$ $F_{Rd,b} = \frac{0.5f_{u,tab}A_{nt}}{\gamma_{M2}} + \frac{f_{y,tab}A_{nv}}{\sqrt{3}\gamma_{M0}}$ $= \frac{0.5 \times 490 \times 412.5}{1.25} + \frac{355 \times 2275}{\sqrt{3} \times 1.0}$ $= 547.13kN$ Tensile resistance of beam web: $N_{Rd} = \min(F_{Rd,g}, F_{Rd,n}, F_{Rd,b})$ $= \min(554.69kN, 357.21kN, 547.13kN)$ $= 357.21kN > N_{Ed} = 200kN$	**OK**

Check 3 – Weld resistance		
Ref	Calculations	Remark
SS EN1993-1-8	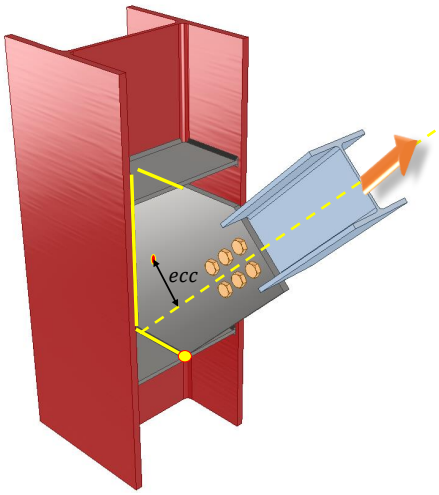 Location of centre of gravity of welds group: $\bar{x} = \frac{b^2}{(2b + d)}$ $= \frac{169.1^2}{(2 \times 169.1 + 444.3)}$ $= 36.54mm$ $\bar{y} = \frac{d}{2}$ $= \frac{444.3}{2}$ $= 222.15mm$ Unit throat area: $A_u = 2b' + d'$ $= 2 \times 169.1 + 444.3$ $= 750.5mm$ Moment arm between applied force and weld center: $r = 159.63mm$ Induced moment on welds: $M = N_{Ed} \times r$ $= 200 \times 159.63$ $= 31926kNmm$	Size of the fillet welds: Horizontal length: $b = 169.1mm$ Depth: $d = 444.3mm$ Cope hole size: $n = 8mm$ $b' = 169.1 - n$ $= 161.1mm$ $d' = 444.3 - 2n$ $= 428.3mm$

Check 3 – Weld resistance		
Ref	Calculations	Remark
	Polar moment of inertia: $J = \frac{8b'^3 + 6b'd' + d'^3}{12} - \frac{b'^4}{2b' + d'}$ $= \frac{8 \times 161.1^3 + 6 \times 161.1 \times 428.3 + 428.3^3}{12} - \frac{161.1^4}{2 \times 161.1 + 428.3}$ $= 23213356mm^3$ **Critical point:** Horizontal distance from centroid: $r_{zh} = b - \bar{x}$ $= 169.1 - 36.54$ $= 132.56mm$ Vertical distance from centroid: $r_{zv} = \bar{y}$ $= 222.15mm$ Vertical stress: $\tau_v = \frac{N_{Ed,T}}{A_u} + \frac{Mr_{zh}}{J}$ $= \frac{146.27}{750.5} + \frac{31926 \times 132.56}{23213356}$ $= 0.38kN/mm$ Horizontal stress: $\tau_h = \frac{N_{Ed,L}}{A_u} + \frac{Mr_{zv}}{J}$ $= \frac{136.40}{750.5} + \frac{31926 \times 222.15}{23213356}$ $= 0.49kN/mm$ Resultant stress: $\tau_r = \sqrt{\tau_v^2 + \tau_h^2}$ $= \sqrt{0.38^2 + 0.49^2}$ $= 0.62kN/mm$	Angle between applied force and primary beam: $\theta = 47.0°$ $= 0.82rad$ Longitudinal component of applied force: $N_{Ed,L} = N_{Ed}cos\theta$ $= 200 \times cos47.0°$ $= 136.40kN$ Transverse component of applied force: $N_{Ed,T} = N_{Ed}sin\theta$ $= 200 \times sin43.24°$ $= 146.27kN$

Check 3 – Weld resistance		
Ref	Calculations	Remark
	Choose fillet weld with 6mm leg length, 4.2mm throat thickness and grade S355 which match beam steel grade: Longitudinal resistance: $F_{w,L,Rd} = 1.01kN/mm$ Transverse resistance: $F_{w,T,Rd} = 1.24kN/mm$ **Simplified method:** $F_{w,L,Rd} = 1.01kN/mm > \tau_r = 0.63kN/mm$	**OK**
	Directional method: $SF = \left(\frac{\tau_v}{F_{w,T,Rd}}\right)^2 + \left(\frac{\tau_h}{F_{w,L,Rd}}\right)^2$ $= \left(\frac{0.40}{1.24}\right)^2 + \left(\frac{0.49}{1.01}\right)^2$ $= 0.33 < 1$	**OK**
	Weld resistance between tab plate and beam web: Length of fillet weld parallel to the applied force: $L_L = 190mm \times 2 = 380mm$ Length of fillet weld perpendicular to the applied force: $L_T = 125mm$ Axial resistance of the fillet weld: $N_{Rd} = F_{w,L,Rd}L_L + F_{w,T,Rd}L_T$ $= 1.01 \times 380 + 1.24 \times 125$ $= 538.80kN > N_{Ed} = 200kN$	**OK**

Check 4 – Buckling resistance of gusset plate		
Ref	Calculations	Remark
	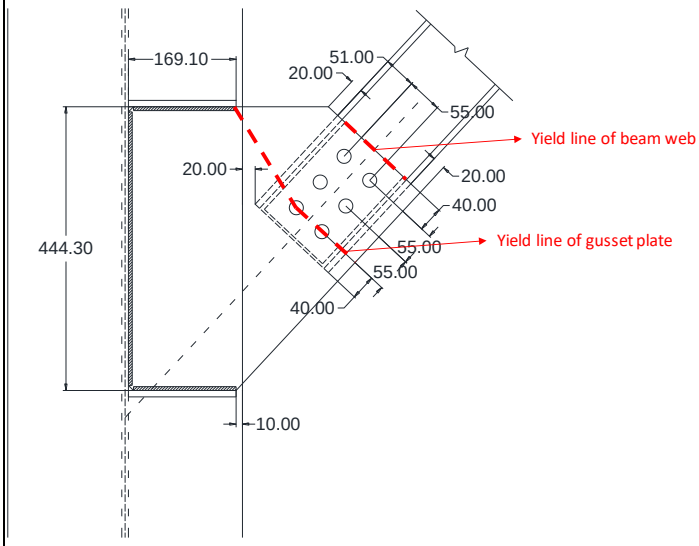	
SCI_P358	This check is necessary only when the force is in compression. Length of yield line (secondary beam flange): $w_{tab} = 125mm$ Length of yield line (gusset plate): $w_{guss} = 310.25mm$ As the 'point of nearest support' is 'in front of' the line of last bolts, the yield line pattern is as shown 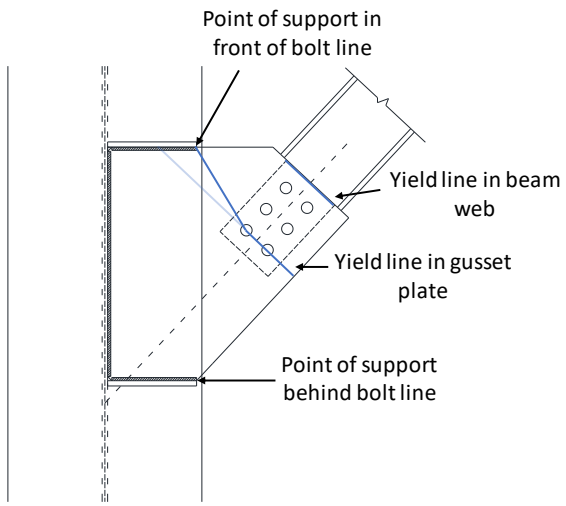	Moment amplified factor: $k_{amp} = 1.2$ Young's modules: $E = 210GPa$
	Inertia of tab plate (flange): $I_{tab} = \frac{w_{tab} t_{tab}^3}{12}$ $= \frac{125 \times 12.5^3}{12}$ $= 20345.05mm^4$	$t_{tab} = 12.5mm$ $t_{guss} = 16mm$

Check 4 – Buckling resistance of gusset plate		
Ref	Calculations	Remark
	Inertia of lap region: $I_{lap} = \frac{0.5(w_{tab} + w_{guss})(t_{tab} + t_{guss})^3}{12}$ $= \frac{0.5 \times (125 + 310.25) \times (12.5 + 16)^3}{12}$ $= 419819mm^4$ Inertia of gusset plate: $I_{guss} = \frac{w_{guss}t_{guss}^3}{12}$ $= \frac{310.25 \times 16^3}{12}$ $= 105898.7mm^4$ Moment distribution factor: $M_{tab} = \frac{1}{\frac{L_{tab}}{EI_{tab}} + \frac{L_{lap}}{2EI_{lap}}}$ $= \frac{1 \times 10^{-3}}{\frac{40}{210 \times 20345.05} + \frac{110}{2 \times 210 \times 419819}}$ $= 100.14kNm$ $M_{guss} = \frac{1}{\frac{L_{guss}}{EI_{guss}} + \frac{L_{lap}}{2EI_{lap}}}$ $= \frac{1}{0 + \frac{110}{2 \times 210 \times 419819}} \times 10^{-3}$ $= 1602.95kNm$ $\mu_{tab} = \frac{M_{tab}}{M_{tab} + M_{guss}}$ $= \frac{52.91}{52.91 + 1255.92}$ $= 0.06$	$L_{tab} = 40mm$ $L_{lap} = 110mm$ $L_{guss} = 0mm$

Check 4 – Buckling resistance of gusset plate		
Ref	Calculations	Remark
	$\mu_{guss} = 1 - \mu_{tab}$ $= 1 - 0.06$ $= 0.94$ Axial resistance of the tab plate and beam web: $N_{Rd,tab}$ $= \dfrac{w_{tab} f_{y,tab} t_{tab}^2}{\left(5k_{amp} \times 0.5\left(t_{tab} + t_{guss}\right)\mu_{tab} + t_{tab}\right)\gamma_{M0}}$ $= \dfrac{125 \times 355 \times 12.5^2}{5 \times 1.2 \times 0.5(12.5 + 16) \times 0.06 + 12.5} \times 10^{-3}$ $= 395.59kN$ Axial resistance of the gusset plate: $N_{Rd,guss}$ $= \dfrac{w_{guss} f_{y,guss} t_{guss}^2}{\left(5k_{amp} \times 0.5\left(t_{tab} + t_{guss}\right)\mu_{guss} + t_{guss}\right)\gamma_{M0}}$ $= \dfrac{310.25 \times 355 \times 16^2}{5 \times 1.2 \times 0.5(12.5 + 16) \times 0.94 + 16} \times 10^{-3}$ $= 292.26kN$ Axial resitance of the connection: $N_{Rd} = \min\left(N_{Rd,tab}; N_{Rd,guss}\right)$ $= \min(395.59; 292.26)$ $= 292.26kN > N_{Ed} = 200kN$	**OK**

Check 4 – Buckling resistance of gusset plate		
Ref	Calculations	Remark
ECCS Eurocode Design Manuals SS EN1993-1-1	The compressive stress is distributed to the gusset plate acoording to that defined by Whitmore section as shown below: 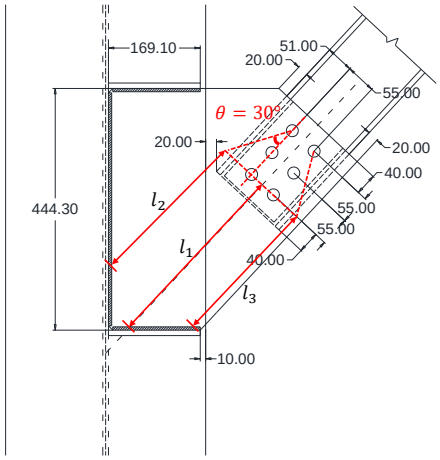 The buckling length is defined as the average of l_1, l_2 and l_3. Radius of gyration: $i = \frac{t_{guss}}{\sqrt{12}} = \frac{16}{\sqrt{12}} = 4.62$ Non-dimensional slenderness ratio: $\lambda_c = \frac{l}{\pi i}\sqrt{\frac{f_y}{E}} = \frac{321.7}{\pi \times 4.62} \times \sqrt{\frac{355}{210000}} = 0.912$ Imperfection factor: $\alpha = 0.49$ $\Phi = 0.5[1 + \alpha(\lambda_c - 0.2) + \lambda_c^2]$ $= 0.5 \times [1 + 0.49 \times (0.912 - 0.2) + 0.912^2]$ $= 1.09$ Buckling reduction factor: $\chi = \frac{1}{\Phi + \sqrt{\Phi^2 - \lambda_c^2}} = \frac{1}{1.09 + \sqrt{1.09^2 - 0.912^2}}$ $= 0.593$	$l_1 = 318.5mm$ $l_2 = 365.7mm$ $l_3 = 280.8mm$ $l = \frac{l_1 + l_2 + l_3}{3}$ $= (318.5 + 365.7 + 280.8)/3$ $= 321.7mm$ $b_{eff} = 182.0mm$

Check 4 – Buckling resistance of gusset plate		
Ref	Calculations	Remark
	Buckling resistance: $P_{cr} = \chi b_{eff} t_{guss} f_y$ $= 0.593 \times 182 \times 16 \times 355 \times 10^{-3}$ $= 612.77kN > N_{Ed} = 200kN$	**OK**

Check 5 – Gusset plate tensile resistance		
Ref	Calculations	Remark
SS EN1993	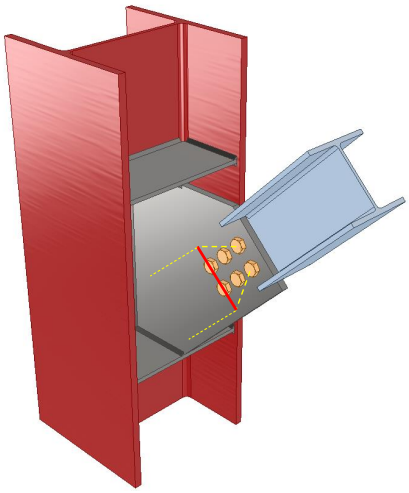 **Gusset plate gross section resistance:** Gross area (Whitmore section) of gusset plate: $A_g = b_{eff} t_{guss}$ $= 182 \times 16$ $= 2912mm^2$ Tensile resistance: $F_{Rd,g} = \frac{A_g f_{y,guss}}{\gamma_{M0}}$ $= \frac{2912 \times 355}{1.0} \times 10^{-3}$ $= 1033.76kN$ **Gusset plate net section resistance:** Net shear area of gusset plate: $A_{net} = A_g - n_2 d_0 t_{guss}$ $= 2912 - 2 \times 22 \times 16$ $= 2208mm^2$ $F_{Rd,n} = \frac{0.9 A_{net} f_{u,guss}}{\gamma_{M2}}$ $= \frac{0.9 \times 2208 \times 490}{1.25} \times 10^{-3}$ $= 778.98kN$	$h_g = 240.0mm$ $\gamma_{M0} = 1.0$ (SS EN1993-1-1)

Check 5 – Gusset plate tensile resistance		
Ref	Calculations	Remark
	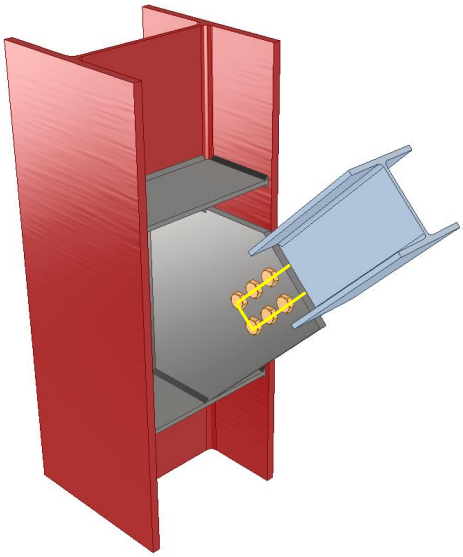 **Gusset plate block shear tearing resistance:** Net area subjected to tension: $A_{nt} = (p_2 - d_0)t_{guss}$ $= (55 - 22) \times 16$ $= 528mm^2$ Net area subjected to shear: $A_{nv} = 2(2p_1 + e_1 - 1.5d_0)t_{guss}$ $= 2 \times (55 \times 2 + 40 - 2.5 \times 22) \times 16$ $= 3040mm^2$ $F_{Rd,b} = \frac{0.5f_{u,guss}A_{nt}}{\gamma_{M2}} + \frac{f_{y,guss}A_{nv}}{\sqrt{3}\gamma_{M0}}$ $= \frac{0.5 \times 490 \times 528}{1.25} + \frac{355 \times 3040}{\sqrt{3} \times 1.0}$ $= 726.56kN$ Tensile resistance of gusset plate: $N_{Rd} = \min(F_{Rd,g}, F_{Rd,n}, F_{Rd,b})$ $= \min(1033.76kN, 778.98kN, 726.56kN)$ $= 726.56kN > N_{Ed} = 200KN$	**OK**

6 Purlin Connections

6.1 Introduction

Purlin connections are generally simple to design, however if detailed wrongly, the installation works will end up very unproductive due to the sheer numbers of purlins to be installed. This section gives suggestions on how purlins are to be detailed so that on-site works can be more productive.

6.2 Design and detailing

Figure *6-1* below shows an unproductive purlin connection. The detail is unproductive because:

1. Adding stiffeners unnecessarily will incur addition fabrication cost and affect productivity.
2. With this configuration, purlin cannot be unhooked from crane until the bolts are installed. This affect site productivity greatly.

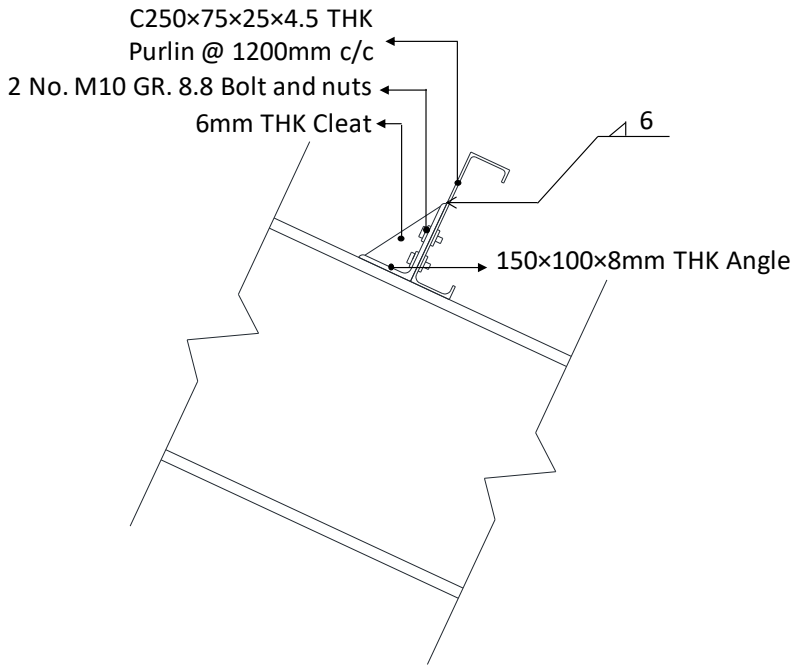

Figure 6-1 Example of an unproductive purlin connection

Purlin should be configured in such a way, as shown in Figure *6-2*, that it will not slip off the roof after it is unlooked from the crane. As much as possible, the cleats should be designed such that stiffeners can be omitted. As a guide, the recommended value “H” and cleat plate thickness can be obtained from the manufacturer’s product manual and the Engineer should be able to verify that stiffeners are not required. In addition, to prevent water trapping, weep holes should be provided.

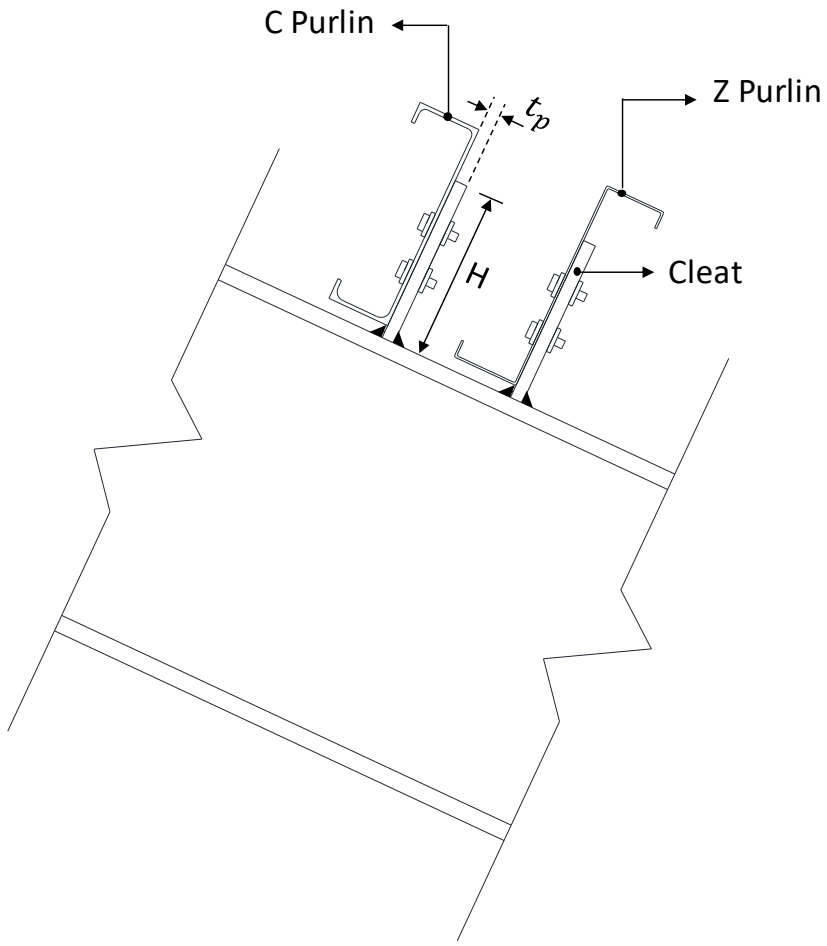

Figure 6-2 Productive purlin connection

6.3 Provisions of sag rods

Sag rods are necessary to reduce the span of the purlins and control deflections. The sag rods configuration should be provided as per the manufacturer's recommendation. However, it should be noted that the sag rods should be anchored to strong points to be effective. In the case of a pitched roof, the anchor point is usually provided via connection between the top most purlins as shown in Figure *6-3*. For single eave roof or wall girts, the top most 2 rows of purlins can be configured into a truss to anchor the sage rods as shown in Figure *6-4*.

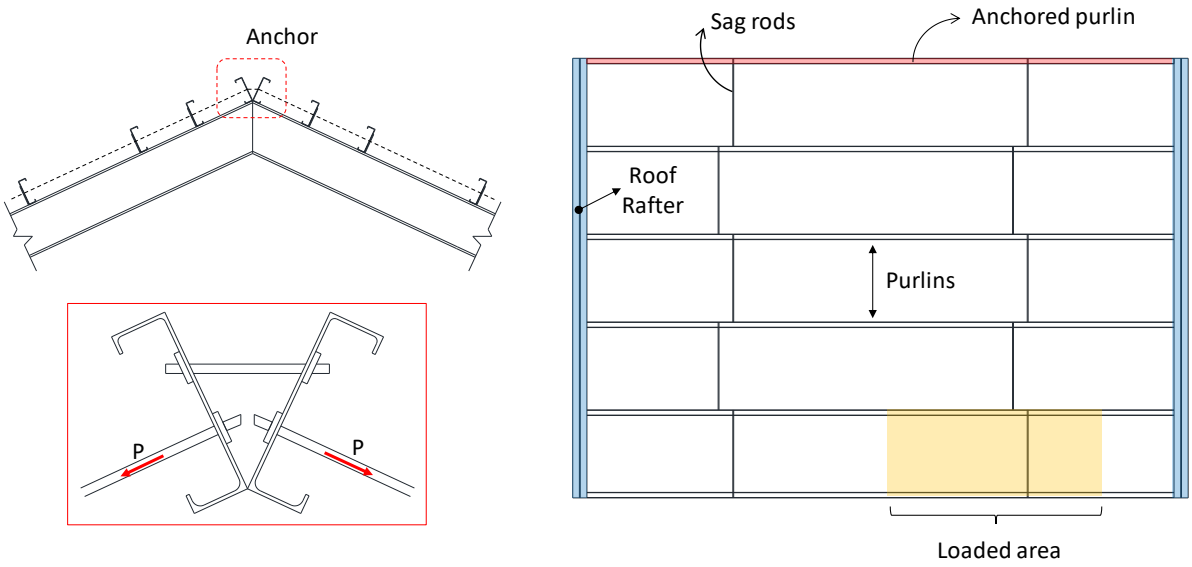

Figure 6-3 Suggest configuration for pitched roof

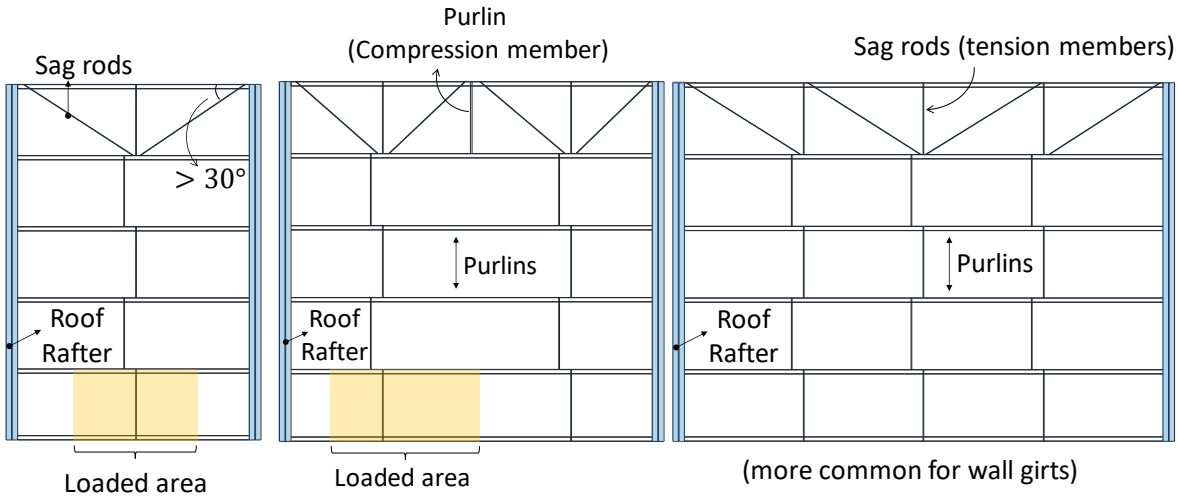

Figure 6-4 Suggest configurations for single eave roof (can be applied for wall girts)

7 Non-standard Connections

7.1 Introduction

This section suggests several non-standard details which are commonly adopted in the steelwork construction. When there is no relevant design guide on these types of connections, finite element analysis may be used to analyze the failure mode and stress flow. The connections should be checked to ensure the adequacy of all components in the connections.

7.2 Tubular column-to-column connections (different column sizes)

In a building structure, different sizes of columns are joined and they may be aligned in such a way that they are flushed to the exterior of the building to facilitate façade installation. For such joints, tapered build-up sections or end plate connection with stiffeners can be adopted for connecting CHS, RHS or UC sections with load eccentricity, as shown in Figure *7-1*.

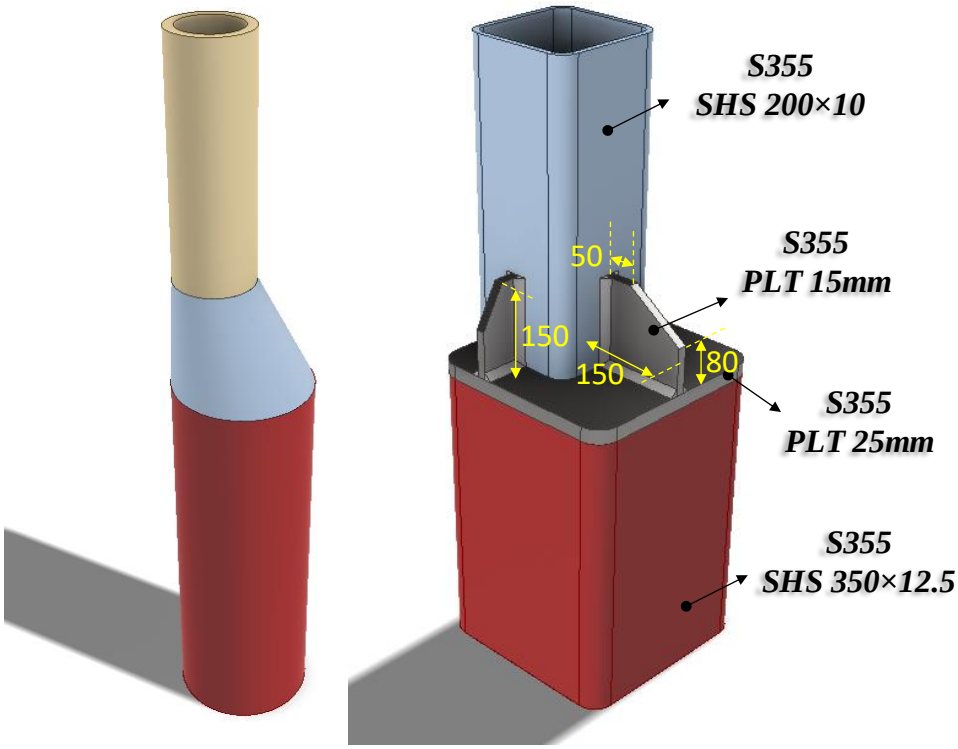

Figure 7-1 Connecting tubular columns of different sizes

A tapered CHS section may be used as a transition piece to connect CHS columns with different diameters as shown in Figure *7-2*. The wall thickness of the taper section should be at least equal to the thinner one of the connected columns. The transition gradient of the taper section should not be greater than 1:6 to allow smooth flow of stresses from one column to another. Internal diaphragm rings may also be used in the joint between the taper section and CHS columns.

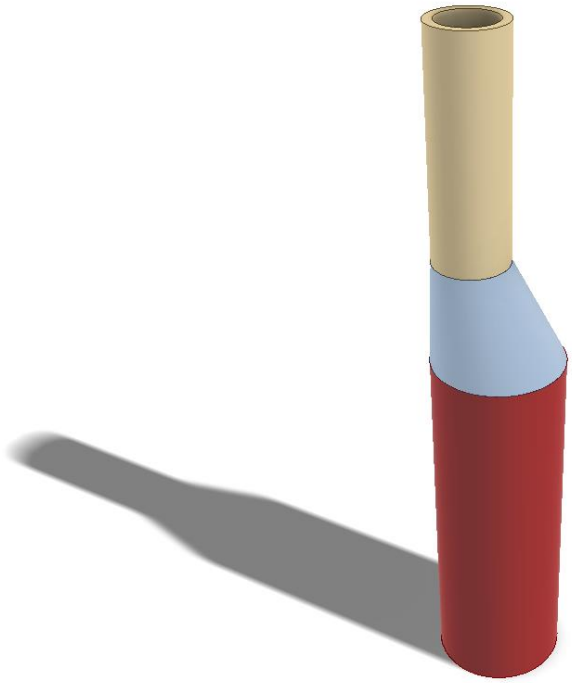

Figure 7-2 Taper section connecting circular column of different sizes

For RHS, end plate with stiffeners can be adopted to connect columns with different sizes. As there is no relevant design code nor guide on this type of connection, finite element analysis may be used to analyze the failure modes and stress flow. In the calculations below, two possible failure modes are identified and relevant checks are carried to ensure adequacy of the connection.

Check 1 – Bending resistance of end plate		
Ref	Calculations	Remark
	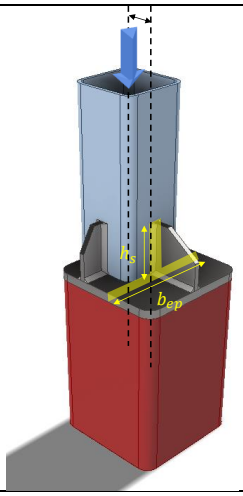	
	Design axial force = 400kN Larger column: RHS 350×350×12.5 Smaller column: RHS 200×200×10 Width of end plate: $b_{ep} = 350mm$ Thickness of end plate: $t_{ep} = 25mm$ Height of stiffener: $h_s = 150mm$ Thickness of stiffener: $t_s = 15mm$ Eccentricity between the central lines of columns: $ecc = \frac{350}{2} - \frac{200}{2} = 75mm$ Moment due to eccentricity: $M_{Ed,1} = N_{Ed} ecc = 400 \times 75 \times 10^{-3}$ $= 30kNm$ Location of centroid for combined section of end plate and stiffener (from top): $x = \frac{b_{ep}t_{ep}\left(\frac{t_{ep}}{2} + h_s\right) + h_s t_s \left(\frac{h_s}{2}\right)}{b_{ep}t_{ep} + h_s t_s}$ $= \frac{350 \times 25 \times \left(\frac{25}{2} + 150\right) + 150 \times 15 \times \left(\frac{150}{2}\right)}{350 \times 25 + 150 \times 15}$ $= 144.60mm$ Distance between centroid of combined section and centroid of stiffener: $d_1 = x - \frac{h_s}{2} = 144.60 - \frac{150}{2} = 69.60mm$	

Check 1 – Bending resistance of end plate		
Ref	Calculations	Remark
	Distance between centroid of combined section and centroid of end plate: $d_2 = \left(h_s + \frac{t_{ep}}{2}\right) - x = \left(150 + \frac{25}{2}\right) - 144.60$ $= 12.90mm$ Second moment of area of combined section: $I = I_{ep} + A_{ep}d_2^2 + I_s + A_s d_1^2$ $= \frac{b_{ep}t_{ep}^3}{12} + b_{ep}t_{ep}d_2^2 + \frac{t_s h_s^3}{12} + t_s h_s d_1^2$ $= \frac{350 \times 25^3}{12} + 350 \times 25 \times 12.90^2$ $+ \frac{15 \times 150^3}{12} + 15 \times 150 \times 69.60^2$ $= 17030125mm^4$ Elastic modulus of combined section: $W_{el} = \frac{I}{x} = \frac{17030125}{144.60} = 117772.2mm^3$ Moment capacity: $M_{Rd} = W_{el}f_y = 117772.2 \times 345 \times 10^{-6}$ $= 40.63kNm > M_{Ed} = 30kNm$	OK

Check 2 – Punching shear in end plate		
Ref	Calculations	Remark
	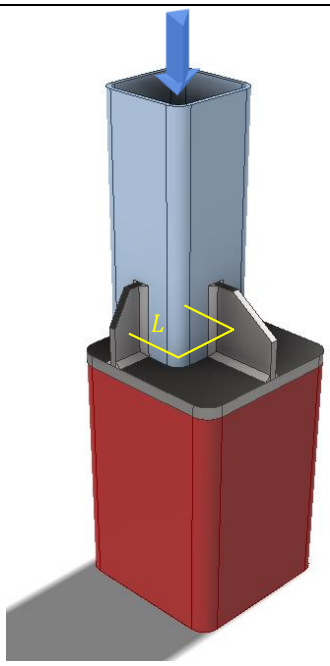 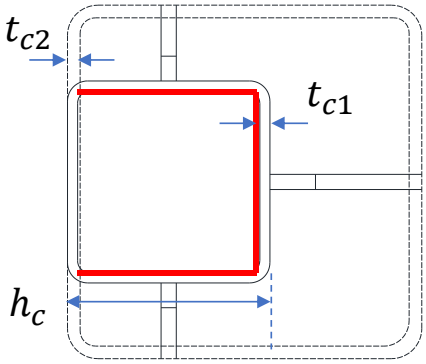 Thickness of the larger column (RHS350×350× 12.5): $t_{c2} = 12.5mm$ Perimeter of smaller column outside the support: $L = (3h_{c1} - 2t_{c2}) - 4t_{c1}$ $= (3 \times 200 - 2 \times 12.5) - 4 \times 10$ $= 535mm$ Axial load resistance: $N_{Rd} = \frac{f_y}{\sqrt{3}} t_{ep} L = \frac{355}{\sqrt{3}} \times 25 \times 535 \times 10^{-3}$ $= 2741.33kN > N_{Ed} = 400kN$	OK

7.3 Member transition in truss chords

Where trusses are concerned, the top chords are usually flushed at the top to allow steel decking or purlins installation. Sometimes the bottom chords are flushed at the bottom for architectural or MEP purposes. For economical purposes or to reduce steel self-weight, the members are sized differently within the cords. A tapered built up section can be used to bridge the transition from the bigger chord to the smaller member. The transition angle should be not greater than 45° (30° is recommended) to prevent stress concentration and allow smooth flow of stress. Figure *7-3* shows three common types of such connections. Full penetration butt weld may be used to connect the members. The thickness of the transition piece should be the smaller thickness of the connecting members. In addition, such connections should not be used for in situation fatigue loading.

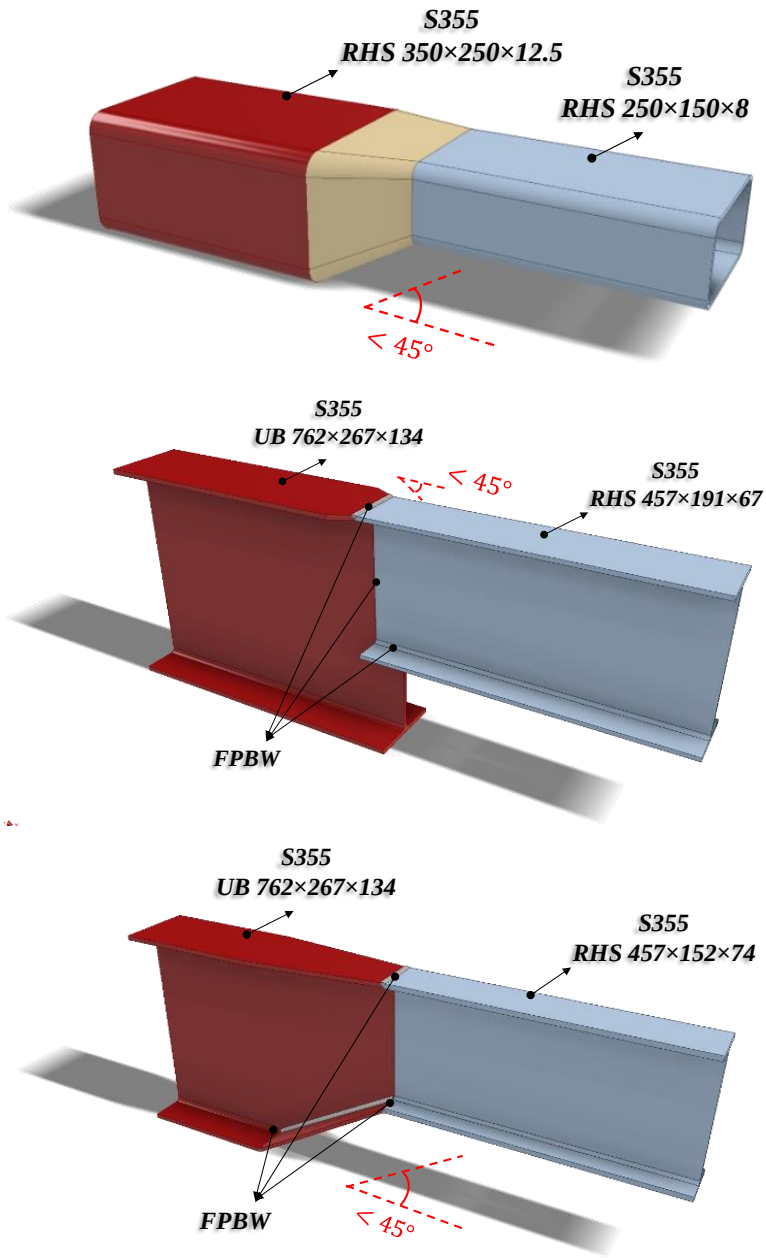

Figure 7-3 Connecting chord members of different sizes

7.4 Stiffeners in truss chords

Very often, engineers specify stiffeners to match the incoming web member and this could incur higher cost of fabrication. Engineers should carry out checks according to SS EN 1993-1-5 to determine whether such stiffeners are necessary. For robustness purpose, stiffeners are needed even the compression load resistance of the unstiffened web of chord member is sufficient. This is to cater for unbalance loads in reality.

Check 1 – whether the member is experiencing compression forces

Check 2 – check for unstiffened web bearing and buckling capacity

Check 3 – if web stiffening is required, provide stiffeners and web bearing capacity, and

Check 4 – check stiffened web buckling capacity based on stiffeners provided in "check 3"

For Warren trusses, gusset plate may be used to connect web members to chord member. In structural analysis, the connecting node may be modelled as pin. In such case, the gusset plate should be checked against buckling similar to 2.3.9 and 2.3.10. Stiffeners may be needed to increase the gusset plate capacity.

7.4.1 Example 1 – Stiffened truss connection

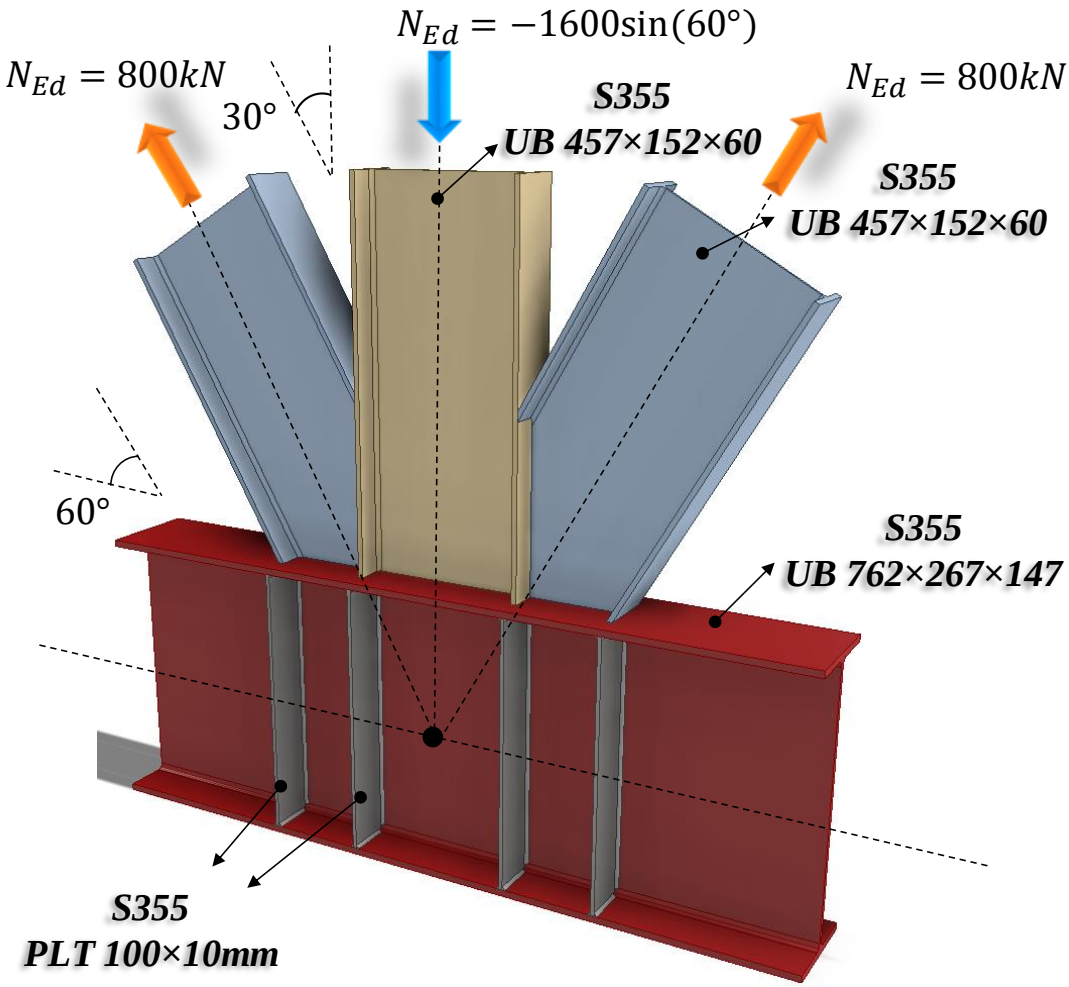

Check 1 – Weld resistance		
Ref	Calculations	Remark
	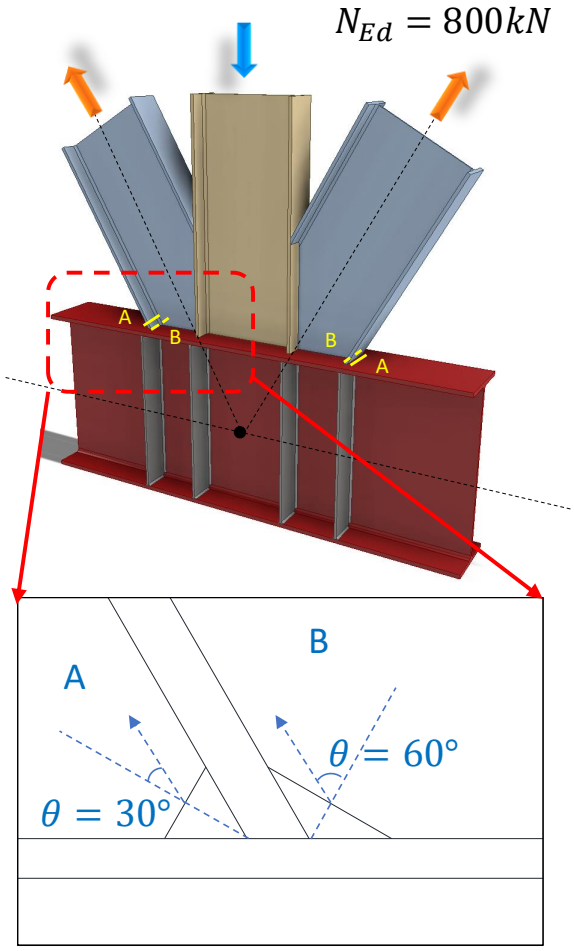 Assume tensile normal force is resisted by two flanges: Tensile normal force: $N_{Ed} = 800kN$ Applied tensile force on one flange: $F_{Ed} = \frac{N_{Ed}}{2} = 400kN$	
SS EN1993-1-8	In this example, fillet weld between the tension member and chord is checked. Choose S355 fillet weld with 10mm leg length: **Weld A:** Angle between the tension member and chord: $\gamma_1 = 60°$	For S355 fillet weld: $\beta_w = 0.9$ $f_u = 470MPa$ $\gamma_{M2} = 1.25$

Check 1 – Weld resistance		
Ref	Calculations	Remark
	Throat thickness: $a = s \cdot \cos\left(\frac{\gamma}{2}\right) = 10 \times \cos\left(\frac{60°}{2}\right) = 8.66mm$ Design shear strength: $f_{vw,d} = \frac{f_u/\sqrt{3}}{\beta_w \gamma_{M2}}$ $= \frac{470/\sqrt{3}}{0.9 \times 1.25}$ $= 241.20MPa$ Design longitudinal resistance per unit length: $F_{w,L,Rd1} = f_{vw,d} a = 241.20 \times 8.66 \times 10^{-3}$ $= 2.09kN/mm$ $K = \sqrt{\frac{3}{1 + 2\cos^2\theta}}$ $= \sqrt{\frac{3}{1 + 2\cos^2(30°)}}$ $= 1.10$ Design transverse resistance per unit length: $F_{w,T,Rd1} = KF_{w,L,Rd} = 1.10 \times 2.09$ $= 2.29kN/mm$ **Weld B:** Angle between the tension member and chord: $\gamma_2 = 120°$ Throat thickness: $a = s \cdot \cos\left(\frac{\gamma}{2}\right) = 10 \times \cos\left(\frac{120°}{2}\right) = 5.0mm$	Angle between applied force and effective throat area: $\theta_1 = 30°$

Check 1 – Weld resistance		
Ref	Calculations	Remark
	Design longitudinal resistance per unit length: $F_{w,L,Rd2} = f_{vw,d}a = 241.20 \times 5.0 \times 10^{-3}$ $= 1.21kN/mm$ $K = \sqrt{\frac{3}{1 + 2\cos^2\theta}}$ $= \sqrt{\frac{3}{1 + 2\cos^2(60°)}}$ $= 1.41$ Design transverse resistance per unit length: $F_{w,T,Rd2} = KF_{w,L,Rd} = 1.41 \times 1.21$ $= 1.71kN/mm$ For tensile member (UB457x152x60): Depth: $h_{b1} = 454.6mm$ Width: $b_{b1} = 152.9mm$ Thickness of beam flange: $t_{f1} = 13.3mm$ Thickness of beam web: $t_{w1} = 8.1mm$ Root radius: $r_1 = 10.2mm$ Tensile resistance: $F_{Rd} = b_{b1}F_{w,T,Rd1} + (b_{b1} - t_{w1} - 2r_1)F_{w,T,Rd2}$ $= 152.9 \times 2.29 + (152.9 - 8.1 - 2 \times 10.2) \times 1.71$ $= 562.05kN > F_{Ed} = 400kN$	Angle between applied force and effective throat area: $\theta_2 = 60°$ OK

Check 1 – Weld resistance		
Ref	Calculations	Remark
SS EN1993-1-8 4.3.2.1 (2) & (3)	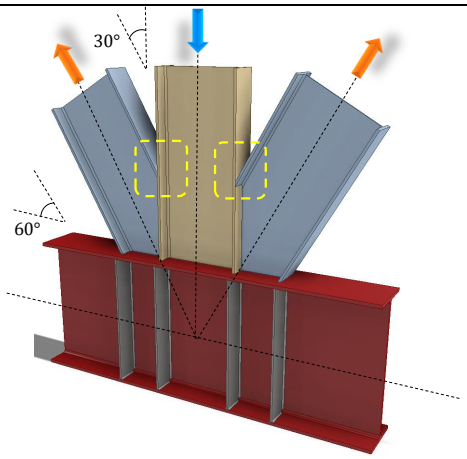 For welds between the tension member and compression member shown in yellow boxes above: The angles between fusion faces is 30° and 150° respectively. For angles smaller than 60°, the fillet weld may not be effective and penetration butt weld is suggested. For angle greater than 120°, the effectiveness of fillet weld should be verified by testing. In this example, full penetration butt weld is suggested to connect the tension member and compression member. 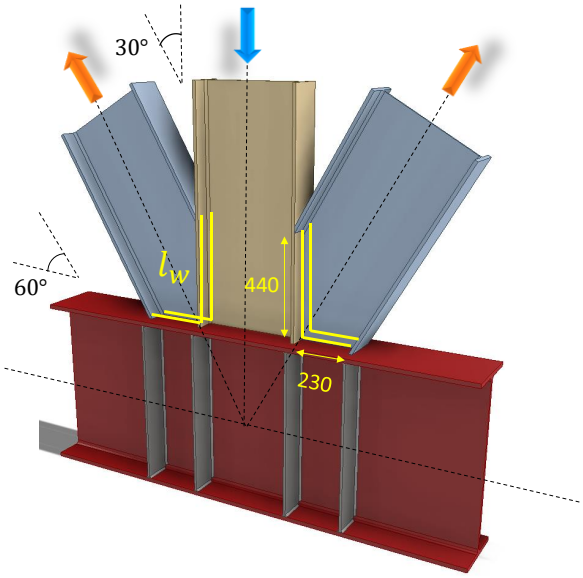 S355 fillet weld with 10mm leg length and 7mm throat thickness is used to connect the webs of tension member to the bottom chord and compression member:	

Check 1 – Weld resistance		
Ref	Calculations	Remark
	Length of fillet weld: $l_w = 2 \times (230 + 440) = 1340mm$ Longitudinal resistance: $F_{w,L,Rd} = 1.69kN/mm$ Tensile resistance of web fillet weld: $F_{Rd,w} = F_{w,L,Rd} l_w$ $= 1.69 \times 1340$ $= 2264.6kN > N_{Ed} = 800kN$	

Check 2 – Chord web and stiffener resistance		
Ref	Calculations	Remark
SS EN1993-1-5	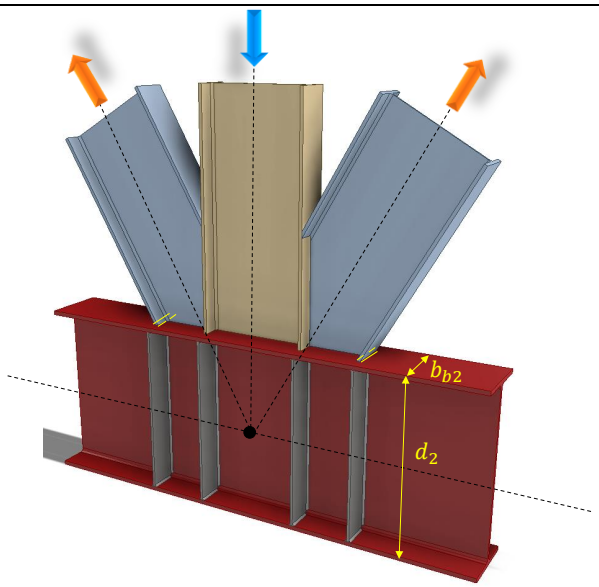 For chord member: Depth: $h_{b2} = 754mm$ Width: $b_{b2} = 265.2mm$ Thickness of beam web: $t_{w2} = 12.8mm$ Thickness of beam flange: $t_{f2} = 17.5mm$ Root radius: $r_2 = 16.5mm$ Distance between fillet: $d_2 = 686mm$ Cross section area: $A_2 = 18700mm^2$ Yield strength of web: $f_{yw2} = 355MPa$ Yield strength of flange: $f_{yf2} = 345MPa$ Shear buckling of unstiffened web: $\varepsilon_w = \sqrt{\frac{235}{f_{yw}}} = \sqrt{\frac{235}{355}} = 0.814$ $\frac{72\varepsilon_w}{\eta} = 72 \times \frac{0.814}{1.0} = 58.58$ $\frac{d_2}{t_{w2}} = \frac{686}{12.8} = 53.59 < \frac{72\varepsilon_w}{\eta}$ ∴ shear buckling check may not be necessary	$\eta = 1.0$

Check 2 – Chord web and stiffener resistance		
Ref	Calculations	Remark
SS EN1993-1-5	Unstiffened web under transverse load: Assume $\overline{\lambda_F} > 0.5$, $m_2 = 0.02\left(\frac{d_2}{t_{f2}}\right)^2 = 0.02 \times \left(\frac{686}{17.5}\right)^2$ $= 30.73mm$ Effective load length: $l_y = S_s + 2t_{f2}\left(1 + \sqrt{\frac{f_{yf2}b_{b2}}{f_{yw2}t_{w2}} + m_2}\right)$ $= 13.3 + 2 \times 10 + 2 \times 17.5 \times \left(1 + \sqrt{\frac{345 \times 265.2}{355 \times 12.8} + 30.73}\right)$ $= 317.93mm$ $\bar{\lambda}_F = \sqrt{\frac{l_y f_{yw2} d_2}{0.9 k_F E t_w^2}}$ $= \sqrt{\frac{317.93 \times 355 \times 686}{0.9 \times 6 \times 210000 \times 12.8^2}}$ $= 0.65 > 0.5$ $\chi_F = \frac{0.5}{\bar{\lambda}_F} = \frac{0.5}{0.65} = 0.77 < 1.0$ Web buckling resistance: $F_{Rd} = \frac{f_{yw2}(\chi_F l_y)t_{w2}}{\gamma_{M1}}$ $= 355 \times 0.77 \times 317.93 \times 12.8 \times 10^{-3}$ $= 1118.95kN$	Assume the distance between stiffeners is large: $k_f = 6$

Check 2 – Chord web and stiffener resistance		
Ref	Calculations	Remark
SCI_P398	Applied compression force (by one flange of compression member): $N_{Ed2} = N_{Ed1}\sin(\gamma_1)$ $= 800\sin(60°)$ $= 692.82kN < F_{Rd}$ Effective width for compression force: $b_{eff,c} = t_{f1} + 2s + 5(t_{f2} + r_2)$ $= 13.3 + 2 \times 10 + 5 \times (17.5 + 16.5)$ $= 203.3mm$ $\bar{\lambda}_p = 0.932\sqrt{\frac{b_{eff,c}d_2 f_{yw2}}{Et_{w2}^2}}$ $= 0.932 \times \sqrt{\frac{203.3 \times 686 \times 355}{210000 \times 12.8^2}}$ $= 1.12 > 0.72$ $\rho = \frac{\overline{\lambda_p} - 0.2}{\overline{\lambda_p^2}} = \frac{1.12 - 0.2}{1.12^2} = 0.73$ For single side chord, $\beta = 1$: $\omega = \frac{1}{\sqrt{1 + 1.3\left(\frac{b_{eff,c}t_{w2}}{Ac}\right)^2}}$ $= \frac{1}{\sqrt{1 + 1.3\left(203.3 \times \frac{12.8}{10219.5}\right)^2}}$ $= 0.96$	Shear area of chord: $A_C = A_2 - 2b_{b2}t_{f2}$ $+(t_{w2} + 2r_2)t_{f2}$ $= 18700$ $- 2 \times 265.2 \times 17.5$ $+ (12.8$ $+ 2 \times 165.5) \times 17.5$ $= 10219.5mm^2$

Check 2 – Chord web and stiffener resistance		
Ref	Calculations	Remark
	Compression resistance of unstiffened web: $F_{c,Rd} = \frac{\omega\rho b_{eff,c} t_{w2} f_{yw2}}{\gamma_{M1}}$ $= \frac{0.96 \times 0.73 \times 203.3 \times 12.8 \times 355}{1.0} \times 10^{-3}$ $= 651.57kN < N_{Ed2}$ ∴ Stiffeners are needed 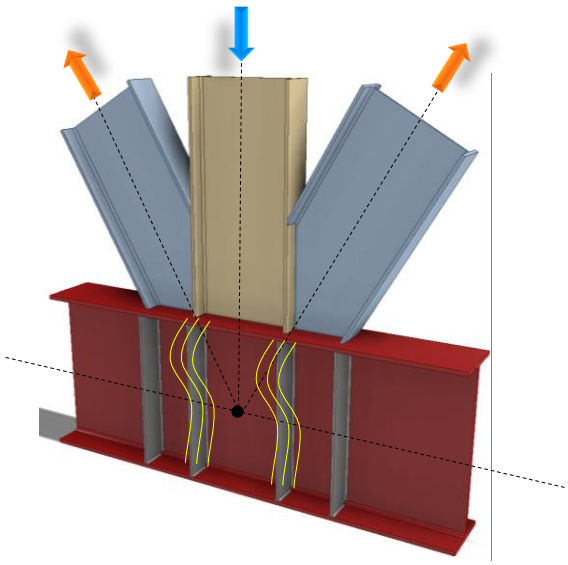	
SS EN1993-1-5	Width of stiffener: $b_s = 100mm$ Thickness of stiffener: $t_s = 10mm$	
CL9.2(8)	Slenderness requirement: $\frac{b_s}{t_s} \leq \frac{1}{\sqrt{5.3 f_y / E}}$ $\frac{b_s}{t_s} = \frac{100}{10} = 10 < \frac{1}{\sqrt{5.3 \times \frac{355}{210000}}} = 10.5$	OK
CL9.3.3(3)	Assume distance between stiffener a is large, $I_{s,u,min} = 0.75 d_2 t_{w2}^3$ $= 0.75 \times 686 \times 12.8^3$ $= 1078984.7mm^4$	$\varepsilon_s = \sqrt{\frac{235}{355}} = 0.814$

Check 2 – Chord web and stiffener resistance		
Ref	Calculations	Remark
	Second moment of inertia of effective section: $I_{s,u} = \frac{t_s(2b_s + t_{w2})^3}{12} + \frac{(30\varepsilon_s t_{w2})t_{w2}^3}{12}$ $= \frac{10 \times (2 \times 100 + 12.8)^3}{12}$ $+ \frac{30 \times 0.814 \times 12.8 \times 12.8^3}{12}$ $= 8084935.2 > I_{s,u,min}$	
CL9.4(3) SCI_P398	Cross section resistance: Effective loading area: $A_{s,net} = (30\varepsilon_s t_{w2} + t_s)(t_w) + 2(b_s - c_h)(t_s)$ $= (30 \times 0.814 \times 12.8 + 10) \times 12.8$ $+2 \times (100 - 20) \times 10$ $= 5727.09mm^2$ Bearing resistance of the loading area: $F_{bc} = \frac{A_{s,net} f_{ys}}{\gamma_{M0}}$ $= 5727.09 \times 355 \times 10^{-3}$ $= 2033.12kN > N_{Ed2}$	Cope hole size: $c_h = 20mm$
CL9.4(2) SCI_P398	Buckling resistance: Radius of gyration: $i_{s,u} = \sqrt{\frac{I_{s,u}}{A_{s,net}}}$ $= \sqrt{\frac{8084935.17}{5727.09}}$ $= 37.57mm$	$\alpha = 0.49$ (solid section)

Check 2 – Chord web and stiffener resistance		
Ref	Calculations	Remark
	Non-dimensional slenderness: $\bar{\lambda}_s = \frac{d_2}{i_{s,u}} \frac{1}{93.9\varepsilon_s}$ $= \frac{686}{37.57} \times \frac{1}{93.9 \times 0.814}$ $= 0.239$ $\Phi_s = 0.5\left[1 + \alpha\left(\bar{\lambda}_s - 0.2\right) + \overline{\lambda_s^2}\right]$ $= 0.5 \times [1 + 0.49 \times (0.239 - 0.2) + 0.239^2]$ $= 0.54$ Reduction factor: $\chi_s = \frac{1}{\Phi_s + \sqrt{\Phi^2 - \bar{\lambda}_s^2}}$ $= \frac{1}{0.54 + \sqrt{0.54^2 - 0.239^2}}$ $= 0.98$ Buckling resistance: $N_{b,Rd} = \frac{\chi_s A_{s,net} f_{ys}}{\gamma_{M1}}$ $= 0.98 \times 5727.09 \times 355 \times 10^{-3}$ $= 1992.79kN > N_{ed2}$	

Note:

Stiffeners should be provided at all four loading points for the robustness purpose.

7.5 Double-sided beam-to-beam composite connection using fin plates and contact plates

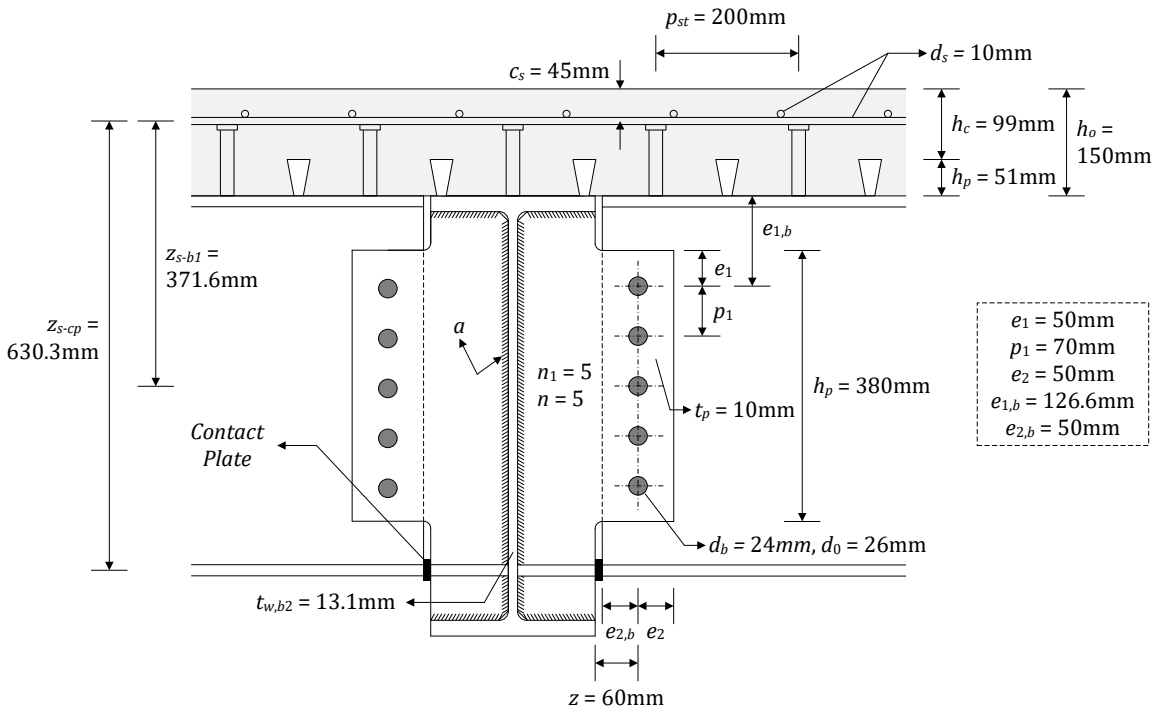

Figure 7-4 Details of double-sided beam-to-beam composite connection

The connection No. --- is a double-sided beam-to-beam composite connection using fin plates and contact plates. Composite connections are covered in SS EN1994-1-1, in which reinforcement can be taken into account in design for the resistance and the stiffness of the connections. Therefore, they can be designed as semi-rigid and partial-strength connections, so that economical design can be achieved by reducing design moment and deflection of beam members. The details of the connection are shown in Figure *7-4*. The distance between the face of the support and the line of bolts 'z' is 60mm. The fin plates may be classified as short fin plate as the thickness of the plate is most likely larger than 0.15z=9.0mm. The fin plates are welded to the supporting beam and bolted to the supported beams. Contact plates and stiffeners are attached at the bottom flange level of supported beams so that the connection can resist bending moment effectively. The details of contact plates should be elaborated to prevent falling and gaps which will lead to unexpected structural behavior. According to the given geometry, a single vertical bolt line and total five bolts will be used. It should be noted that one-sided connection or double-sided connection with different depth supported beams should be avoided in terms of prevention of torsional deformation of the supporting beam, unless its lateral instability is appropriately prevented. In this example, design shear force V_{Ed} and design moment M_{Ed} are given. These values can be obtained by the structural analysis considering the rotational stiffness and moment resistance of the connections.

The design check consists of 6 detailed checks as follow:

1. Moment resistance of connection
2. Bolt group of supported beam
3. Fin plate of supported beam
4. Shear resistance of supported beam's web
5. Welds of fin plate
6. Shear and bearing resistance of supporting beam

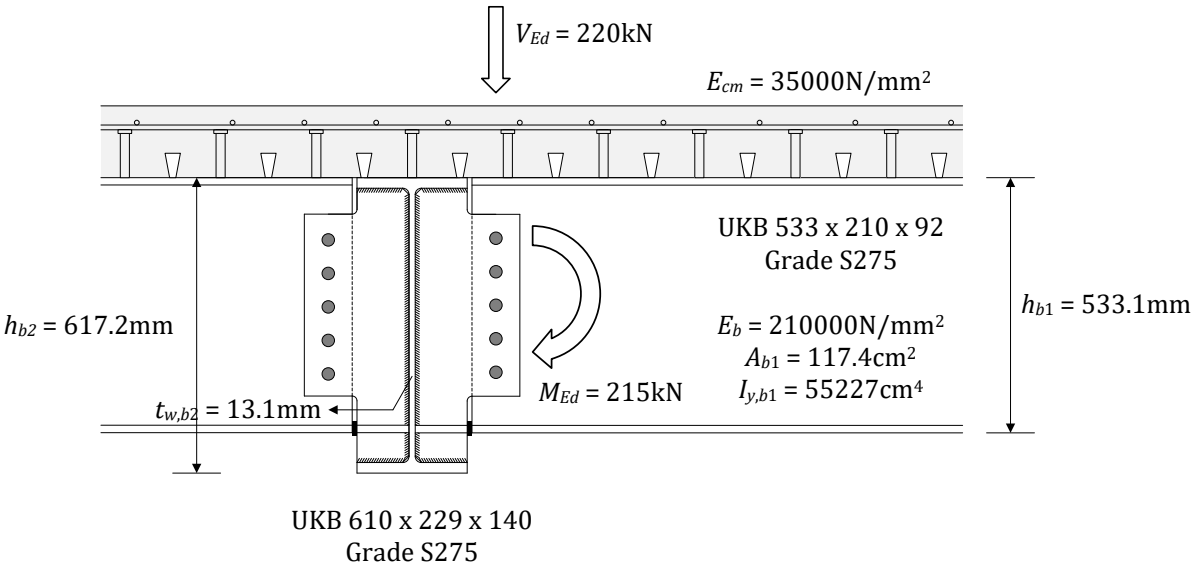
V_{Ed} = 220kN
E_{cm} = 35000N/mm²
UKB 533 x 210 x 92
Grade S275
h_{b1} = 533.1mm
h_{b2} = 617.2mm
E_b = 210000N/mm²
A_{b1} = 117.4cm²
$I_{y,b1}$ = 55227cm⁴
M_{Ed} = 215kN
$t_{w,b2}$ = 13.1mm
UKB 610 x 229 x 140
Grade S275

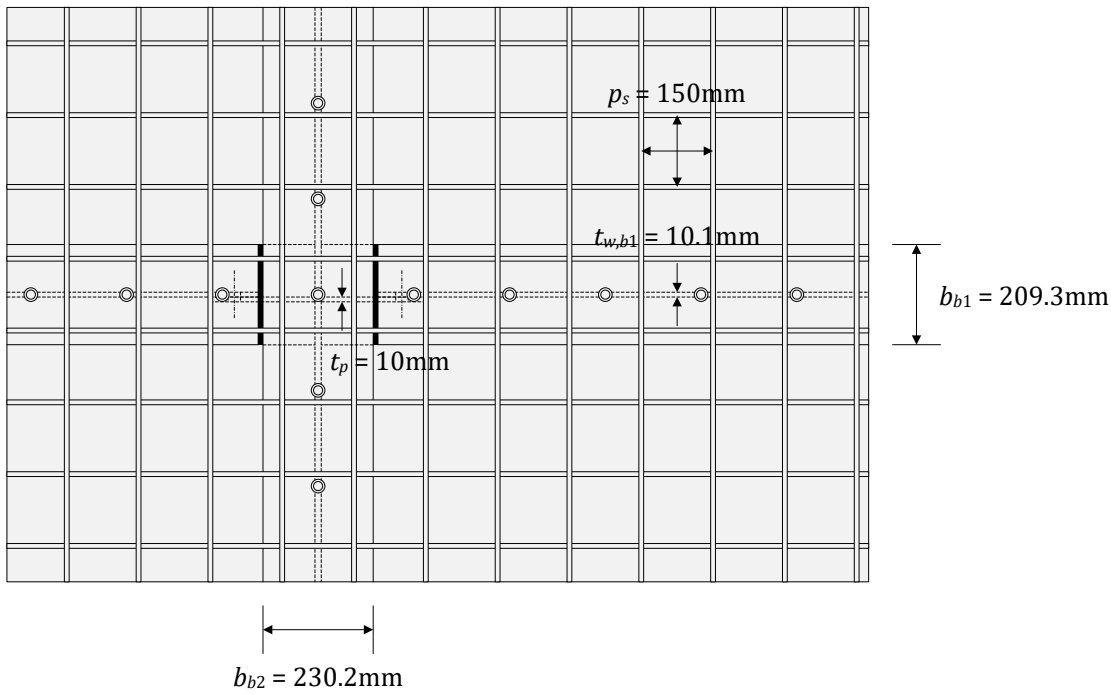
p_s = 150mm
$t_{w,b1}$ = 10.1mm
b_{b1} = 209.3mm
t_p = 10mm
b_{b2} = 230.2mm

Check 1: Moment resistance of connection		
Ref	Calculation	Remark
SS EN1993-1-8 SS EN1994-1-1	**Moment resistance** $M_{j,Rd,min} \geq 0.25M_{cb,pl,Rd}$ for partial-strength connection $M_{j,Rd,min}$ is the moment resistance of connection, calculated as the smaller of the moment resistance due to reinforcing bars $M_{j,Rd,s}$ and moment resistance due to contact part $M_{j,Rd,co}$. **Due to reinforcing bars:** $M_{j,Rd,s} = z_{s-cp}A_{s,j}f_{sk}/\gamma_s$ $A_{s,j}$ is the cross-sectional area of longitudinal reinforcing bars within the effective width of the composite connection $b_{eff,j}$. In this calculation, $b_{eff,j}$ is calculated in accordance with SS EN1994-1-1, but it can be modified according to the actual performance. **Due to contact part:** $M_{j,Rd,co} = z_{s-cp}min(A_{f,b1}; A_{cp})f_{yk}/\gamma_{M0}$ $A_{f,b1}$ is the cross-sectional area of supported beam's flange and A_{cp} is the cross-sectional area of contact plate. $M_{j,Rd,s} = 215.2kNm$ $M_{j,Rd,co} = 565.9kNm$ $M_{Rd,min}$ =min($M_{j,Rd,s}$, $M_{j,Rd,co}$) =min(215kN, 566kN) $\boldsymbol{M_{Rd,min} = 215.2\ kNm}$ $0.25M_{cb,pl,Rd} = 191.4kNm$ $M_{j,Rd,min} > 0.25M_{cb,pl,Rd}$ (OK)	$M_{cb,pl,Rd}$ is the plastic moment resistance of the adjacent composite beam. When plastic neutral axix is in concrete flange ($R_b < F_s$): $M_{cb,pl,Rd} = R_b\left\{\frac{h_{b1}}{2} + (h_o - c_s)\right\}$ When plastic neutral axix is in steel flange ($R_w < F_s < R_b$): $M_{cb,pl,Rd} = R_b\frac{h_{b1}}{2} + F_s(h_o - c_s) - \frac{(R_b - F_s)^2}{4b_{f,b1}f_{y,b}}$ When plastic neutral axix is in steel flange ($F_s < R_w$): $M_{cb,pl,Rd} = M_{b,pl,Rd} + F_s\left\{\frac{h_{b1}}{2} + (h_o - c_s)\right\} - \frac{F_s^2}{4t_{w,b1}f_{y,b}}$ $R_b = A_bf_{y,b}/\gamma_{M0}$ $R_w = R_b - 2b_{f,b1}t_{f,b1}f_{y,b}$ $F_s = A_sf_{sk}/\gamma_s$ A_s is the cross-sectional area of longitudinal reinforcing bars within the effective width of the composite beam b_{eff}. (SS EN1994-1-1, 5.4.1.2) γ_{M0} = 1.00 (NA to SS EN 1993-1-1) γ_s = 1.15 (NA to SS EN 1992-1-1)

Comments:

This composite connection can be designed as a partial-strength connection since its moment resistance $M_{j,Rd,min}$ is greater than 0.25 times the plastic moment resistance of the adjacent composite beam $M_{cb,pl,Rd}$ defined in SS EN1993-1-8, 5.2.3.3. However, if $M_{j,Rd,min}$ is less than $0.25M_{cb,pl,Rd}$, this connection is practically designed as a nominally pinned connection.

In case the moment resistance of the connection $M_{j,Rd,min}$ is insufficient, it can be increased by arranging the additional reinforcing bars over the connection. However, structural analysis should be carried out again because the distribution of moment and deflection of beam members is also varied as the rotational stiffness and moment resistance of the connection vary.

In this design example, it can be found that the given design moment $M_{Ed}$is same as moment resistance of the connection $M_{j,Rd,min}$. This means that the design moment reached the moment resistance of the connection and a plastic hinge was occurred at the connection accordingly. Refer to SS EN1993-1-8 and SS EN1994-1-1 for the detail procedures of the structural analysis considering plastic hinges at connections. However, it should be noted that the connections should have sufficient rotational capacity when plastic hinges are allowed to occur in structural analysis.

Check 2: Bolt group of supported beam		
Ref	Calculation	Remark
SS EN 1993-1-8 SN017	**Bolt shear resistance** $F_{v,Rd} = \frac{\alpha_v f_{ub} A_s}{\gamma_{M2}}$ $F_{v,Rd}$: shear resistance of a single bolt, is given in Table 3.4 of SS EN 1993-1-8 $V_{Rd} = \frac{nF_{v,Rd}}{\sqrt{(1+\alpha n)^2 + (\beta n)^2}}$ $V_{Ed} \leq V_{Rd}$ Using class 8.8 24mm non-preloaded bolts, shear resistance of one single bolt is $F_{v,Rd} = 136kN$. As given: $n = 5, n_1 = 5, n_2 = 1$ $e_1 = 50mm, e_2 = 50mm$ $p_1 = 70mm$ $\boldsymbol{V_{Rd} = 514.6\ kN}$ $V_{Ed} = 219.7kN$ $V_{Rd} > V_{Ed}$ (OK)	For a single vertical line of bolts: $\alpha = 0$ $\beta = \frac{6z}{n_1(n_1+1)p_1}$ $\gamma_{M2} = 1.25$ (NA to SS EN 1993-1-8) For $d = 24mm$, $d_0 = 26mm$, $t_p = 10mm$ Pitch & end distance requirement: $14t_p\ or\ 200mm \geq p_1 \geq 2.2d_0$ $200mm \geq p_1 \geq 57.2mm$ $4t_p + 40mm \geq e_{1/2} \geq 1.2d_0$ $80mm \geq e_{1/2} \geq 31.2mm$
SCI_P358	**Bolt bearing in fin plate** $V_{Rd} = \frac{n}{\sqrt{\left(\frac{1+\alpha n}{F_{b,ver,Rd}}\right)^2 + \left(\frac{\beta n}{F_{b,hor,Rd}}\right)^2}}$ $F_{b,Rd} = \frac{k_1 \alpha_b f_{u,p} d t_p}{\gamma_{M2}}$ $F_{b,ver,Rd}$ is the vertical bearing resistance of a single bolt on the fin plate $F_{b,hor,Rd}$ is the horizontal bearing resistance of a single bolt on the fin plate $\boldsymbol{V_{Rd} = 438.2\ kN} > V_{Ed} = 219.7kN$ (OK) **Bolt bearing in supported beam's web**	For $F_{b,ver,Rd}$: $k_1 = \min\left(\frac{2.8e_2}{d_0} - 1.7; 2.5\right)$ $\alpha_b = \min\left(\frac{e_1}{3d_0}; \frac{p_1}{3d_0} - \frac{1}{4}; \frac{f_{u,b}}{f_{u,p}}; 1.0\right)$ For $F_{b,hor,Rd}$: $k_1 = \min\left(\frac{2.8e_1}{d_0} - 1.7; \frac{1.4p_1}{d_0} - 1.7; 2.5\right)$ $\alpha_b = \min\left(\frac{e_2}{3d_0}; \frac{f_{u,b}}{f_{u,p}}; 1.0\right)$

Check 2: Bolt group of supported beam		
Ref	Calculation	Remark
SCI_P358	$V_{Rd} = \dfrac{n}{\sqrt{\left(\dfrac{1+\alpha n}{F_{b,ver,Rd}}\right)^2 + \left(\dfrac{\beta n}{F_{b,hor,Rd}}\right)^2}}$ $F_{b,Rd} = \dfrac{k_1 \alpha_b f_u d t_{w,b1}}{\gamma_{M2}}$ $F_{b,ver,Rd}$ is the vertical bearing resistance of a single bolt on the fin plate $F_{b,hor,Rd}$ is the horizontal bearing resistance of a single bolt on the fin plate $\boldsymbol{V_{Rd} = 444.7\ kN} > V_{Ed} = 219.7kN$ (OK)	

Check 3: Fin plate of supported beam		
Ref	Calculation	Remark
SCI_P358	**Shear** $V_{Ed} \leq V_{Rd,min}$ $V_{Rd,min}$ is the shear resistance of the fin plate, calculated as the smaller of the gross section shear resistance $V_{Rd,g}$, net section shear resistance $V_{Rd,n}$ and block shear resistance $V_{Rd,b}$ **Gross section:** $V_{Rd,g} = \frac{h_p t_p}{1.27} \frac{f_y}{\sqrt{3}\gamma_{M0}}$ $h_p = 380mm, t_p = 10mm$ $f_y = 275N/mm^2$ $V_{Rd,g} = 475.1kN$ **Net section:** $V_{Rd,n} = \frac{A_{v,net} f_{u,p}}{\sqrt{3}\gamma_{M0}}$ $V_{Rd,n} = 538.0kN$ **Block shear:** $V_{Rd,b} = \frac{0.5 f_{u,p} A_{nt}}{\gamma_{M2}} + \frac{f_{y,p}}{\sqrt{3}} \frac{A_{nv}}{\gamma_{M0}}$ $V_{Rd,b} = 407.1kN$ $V_{Rd,min}$ =min($V_{Rd,g}, V_{Rd,n}, V_{Rd,b}$) =min(475kN, 538kN, 407kN) $\boldsymbol{V_{Rd,min} = 407.1\ kN} > V_{Ed} = 219.7kN$ (OK) **Bending** As $h_p = 380mm > 2.73z = 163.8mm$, $V_{Rd} = \infty$ No check is needed.	The coefficient 1.27 takes into account the reduction in the shear resistance of the cross section due to the nominal moment in the connection. $A_{v,net} = t_p(h_p - n_1\, d_0)$ $A_{nt} = t_p\left(e_2 - \frac{d_0}{2}\right)$ $A_{nv} = t_p\{h_p - e_1 - (n_1 - 0.5)d_0\}$ $\gamma_{M0} = 1.00$ (NA to SS EN 1993-1-1) $\gamma_{M2} = 1.10$ (NA to SS EN 1993-1-8)

Check 3: Fin plate of supported beam		
Ref	Calculation	Remark
SCI_P358	**Lateral torsional buckling** For long fin plate: $V_{Rd} = \min\left(\frac{W_{el,p}}{z}\frac{\chi_{LT} f_{y,p}}{0.6\gamma_{M0}}; \frac{W_{el,p}}{z}\frac{f_{y,p}}{\gamma_{M0}}\right)$ For short fin plate: $\boldsymbol{V_{Rd} = \frac{W_{el,p}}{z}\frac{f_{y,p}}{\gamma_{M0}} = 1103.1kN} < V_{Ed} = 219.7kN$ (OK)	*For long fin plate, lateral torsional buckling must be checked. χ_{LT} is the reduction factor for LTB obtained from table based on the slenderness of the fin plate. $\overline{\lambda_{LT}} = \frac{2.8}{86.8}\left(\frac{z_p h_p}{1.5 t_p^2}\right)^{\frac{1}{2}}$ *Long fin plates should not be used with unrestrained beams without experimental evidence to justify the design

Check 4: Shear resistance of supported beam's web		
Ref	Calculation	Remark
SCI_P358	**Shear:** $V_{Ed} \leq V_{Rd,min}$ $V_{Rd,min}$ is the shear resistance of the supported beam's web, calculated as the smaller of the gross section shear resistance $V_{Rd,g}$, net section shear resistance $V_{Rd,n}$ and block shear resistance $V_{Rd,b}$ **Gross section:** $V_{Rd,g} = V_{pl,Rd} = \frac{A_{v,w} f_{y,b}}{\sqrt{3}\gamma_{M0}}$ $V_{Rd,g} = 914.8kN$ **Net section:** $V_{Rd,n} = \frac{A_{v,net} f_{u,b}}{\sqrt{3}\gamma_{M0}}$ $V_{Rd,n} = 957.3kN$ $V_{Rd,min}$ =min($V_{Rd,g}, V_{Rd,n}$) =min(915kN, 957kN) $\boldsymbol{V_{Rd,min} = 914.8\ kN} > V_{Ed} = 219.7kN$ (OK)	For unnotched beams: $A_{v,w} = A_g - 2b_{b1}t_{f,b1} + (t_{w,b1} + 2r_{b1})t_{f,b1}$ (SS EN 1993-1-8) $A_{v,net} = A_{v,w} - n_1 d_0 t_{w,b1}$ $\gamma_{M0} = 1.00$ (NA to SS EN 1993-1-1)

Check 4: Shear resistance of supported beam's web		
Ref	Calculation	Remark
SCI_P358	**Shear and bending interaction of the beam web:** $V_{Ed}z \leq M_{c,BC,Rd} + V_{pl,AB,Rd}(n_1 - 1)p_1$ $M_{c,BC,Rd}$ is the moment resistance of the beam web BC As $V_{BC,Ed} < 0.5V_{pl,BC,Rd}$, the connection experiences **low shear.** $M_{c,BC,Rd} = \frac{f_{y,b}t_{w,b1}}{6\gamma_{M0}}\{(n_1 - 1)p_1\}^2$ For this case, as the fin plate is considered as short fin plate, according to SCI_P358, resistance of the web does not need to be checked.	*For long fin plates, it is necessary to ensure that the bolted section can resist a moment $V_{Ed}z$ $V_{pl,AB,Rd} = \frac{t_{w,b1}e_{2,b}f_{y,b1}}{\sqrt{3}\gamma_{M0}}$ $V_{BC,Ed} = \frac{V_{Ed}(n_1 - 1)p_1}{h_{b1}}$ Shear resistance of the beam web AB: $V_{pl,BC,Rd} = \frac{t_{w,b1}(n_1 - 1)p_1 f_{y,b}}{\sqrt{3}\gamma_{M0}}$

Check 5: Welds of fin plate		
Ref	Calculation	Remark
SCI_P358	**For this situation, the fin plate is welded to the supporting beam using C-shape weld group**, both sides of the fin plate will be welded so that the design force will be half of the applied force. $P_{Ed} = \frac{V_{Ed}}{2} = \frac{1000}{2} = 110kN$ Unit throat area: $A_u = 2b + d = 967mm$ Moment caused by applied force: $M = Pr = 15684kNmm$ Polar moment of inertia: $J = \left(\frac{8b^3 + 6bd^2 + d^3}{12} - \frac{b^4}{2b + d}\right)$ $= 28312438mm^4$ It is necessary to find the point with highest stress, in this case, the highest stress found is: $\tau_v = 0.195$kN/mm $\tau_h = 0.152$kN/mm $\tau_r = 0.247$kN/mm Hence, based on **simple method** choose **fillet weld with leg length 8.0mm and throat thickness 5.6mm** gives 1.25kN/mm **Directional method:** For fillet weld with 8.0mm leg length and 5.6mm throat thickness: $P_L = 1.25$kN/mm $P_T = 1.53$kN/mm $\left(\frac{\tau_v}{P_L}\right)^2 + \left(\frac{\tau_h}{P_T}\right)^2 = \mathbf{0.03} < 1$ (OK)	Length of weld: Horizontal b=95mm Vertical d=547mm Position of centre of gravity of the weld group: $\bar{x} = \frac{b^2}{2b+d}$ =12.2mm $\bar{y} = \frac{d}{2}$ =273.5mm $r = z + b - \bar{x}$=142.8mm $\tau_v = \frac{P_{Ed}}{A_u} + \frac{Mr_h}{J}$ $\tau_h = \frac{Mr_v}{J}$ $\tau_r = \sqrt{\tau_v^2 + \tau_h^2}$ $r_v = 273.5mm$ $r_h = 82.8mm$

Check 6: Shear and bearing resistance of supporting beam		
Ref	Calculation	Remark
SCI_P358	**Local shear of beam web:** $\frac{V_{Ed,tot}}{2} \leq F_{Rd}$ $F_{Rd} = \frac{A_v f_{y,b}}{\sqrt{3}\gamma_{M0}}$ $F_{Rd} = 790.4kN > \frac{V_{Ed,tot}}{2} = 219.7kN$ (OK) **Punching shear** As the connection is double-sided, no check is needed.	$V_{Ed,tot} = \left(\frac{V_{Ed,1}}{h_{p,1}} + \frac{V_{Ed,2}}{h_{p,2}}\right) h_{p,min}$ $A_v = h_p t_{w,b2}$ $t_{w,b2}$ is the thickness of the supporting beam web $\gamma_{M0} = 1.00$ (NA to SS EN 1993-1-1)

8 Good Practices for Connections Design

8.1 General

In practice, the design activity of a steel structure may involve both engineers and fabricators. Apart from satisfying the architectural requirements, good connection designs prioritize safety, serviceability and durability requirements with economy and feasibility of fabrication borne on mind. In order to achieve buildable steel connections, that are fabricator and erector friendly, good communication between engineer and fabricator is needed. Economic steel connection designs are not only derived from less materials, but also time saving derived from easy site erection and minimization of rectifications due to error-prone details. Good connections detailing has been proposed by various regional design guides and committees in professional articles and resources on websites such as www.steelconstruction.info. Some of the relevant recommendations suitable for local practices are compiled in this chapter for readers' easy reference.

8.2 Recommendations for cost-effective connection design

This section provides some recommendations for cost-effective connections design that also could reduce problems at the construction sites:

(1) For bolted splice connections, the width of the flange cover plate should be different from that of the beam flange.
Provide at least 15mm difference on each side of the flange plate at the flange and cover plate connection. If bolt holes misalign during the installation, the difference between the cover plate and beam flange provides space for fillet welds to be placed to compensate the missing bolts.

(2) Use oversized bolt holes in beam splice and brace connections.
For connections with slip-critical bolts, oversized bolt holes are often preferred over standard bolt holes. Although oversized bolt holes have lower bolt capacity, they provide more erection tolerance and reduce site problems. Typically, standard bolt holes are used in main member while oversized bolt holes are used in detail material such as gusset plate.

(3) Standardizing connections used on one project.
Types of connections on a project should be minimized to save fabrication time and cost and reduce possible errors.

(4) Avoid using bolts with diameters close to each other.
A minimum difference between bolt sizes is needed to prevent uncertainty and reduce site errors. If necessary, use a maximum of up to three sizes of bolts in each project.

(5) Avoid using different grades of bolts with the same diameter.

(6) Bolted connections are preferred over field-welded connections.
For site-welded connections, qualified welder, welding platform and good welding conditions are needed. Compared to site-welded connections, bolted connections are less time consuming and relatively cheaper. It is a good practice to "weld at factory" and "bolt at site".

(7) Try to use fillet welds instead of penetration butt welds whenever it is possible.
Fillet welds are less expensive as base-metal preparation is not required. Moreover, penetration butt welds require more weld metal and inspection.

(8) Limit the maximum fillet weld size.

Smaller, longer welds are preferred over larger, shorter welds. The normal maximum leg length that can be made in a single pass is 8mm.Therefore, if a 12mm fillet weld is required, an 8mm deep penetration weld may be used instead as this can be made in a single pass.

(9) Avoid overhead welding.

Overhead welding is challenging, costly and generally yields lower quality welds. Welding positions are preferred to be flat and horizontal.

(10) Use full penetration butt welds only when necessary.

Full penetration butt welds cost more due to increased material preparation, testing requirements, weld-metal volume and material distortion. Full penetration butt weld is difficult for hollow steel sections as it requires backing bars.

(11) Avoid excessive connections.

Connections may be designed to actual load requirements instead of full capacity of the members. Excessive connections may result in higher cost and over-welding may damage the steel.

(12) Minimize weld volume for penetration butt welds.

The weld configuration with the least weld volume is most economical. For weld configuration with double-sided preparation, the additional cost of material preparation may offset the cost saving of less weld volume. For full penetration butt welds, it is economical to prepare one side of plates with a thickness less than 25mm and to prepare both sides of plates with a thickness greater than or equal to 25mm.

(13) Minimizing the usage of slip-critical bolts

Slip-critical bolts are more expensive than bearing bolts due to additional installation, inspection and faying surface preparation. Moreover, larger bolts are needed for reduced bolt strength. If slip-critical bolts are needed, they must be clearly indicated on shop drawing.

(14) Avoid using bolt with diameter greater than 30mm.

Bolts with diameter greater than 30mm are difficult to tighten and costly.

(15) Avoid slotted holes in plates thicker than the bolt diameter.

Slot holes in thick steel plates are hard to punch and must be flame-cut, which is difficult and costly. Standard holes or oversized holes are preferred.

(16) Allow for site adjustment in one direction only for bolted connections.

If slotted holes are needed for a bolted connection for site adjustment, the adjustment should be in only one direction.

(17) Cope or block beams instead of cutting flush and grinding smooth.

Cutting flush and grinding smooth is more expensive.

(18) For shear plate connection to hollow steel section columns, weld single-plate to HS column instead of using through-plate connections.

Through plate shear connections are costly and more difficult to fabricate than welding a fin plate to column.

(19) For beam to hollow steel section column moment connections, use direct moment connections when possible.

Moment connections in which the beam flanges are welded directly to the face of the hollow steel section column are the most economical moment connections to hollow section column.

(20) Consider bolted hollow steel section brace connections.

Hollow steel section braces commonly are shown slotted and welded to the gusset plate. To eliminate the need of site welding, the hollow steel section can be bolted to the gusset plate using a welded tee end.

(21) For High Strength Friction Grip bolts (HSFG), use thick nuts and long thread length.

Thick nuts and long thread length provide ductility predominantly by plastic elongation of the HSFG bolts. To prevent induced strain being localized, longer thread length is necessary. Site control of overtightening during preloading is important.

(22) For bolted splice connection, cover plates should enclose as much of the joint area as possible.

It is a good practice to ensure the cover plates cover as much area as possible in a splice connection to improve durability. Normally cover plates are provided on both faces of the flange and the web. Pack plates may be used to when there are differences between the thicknesses of web or flange plate on either side of the joint.

(23) Tapered cover plates may be used to increase the efficiency of the connection.

In highly loaded splice, the number of bolts at the first and the last rows of each bolt group may be reduced to improve the stress flow from flange plate to cover plate.

(24) Avoid welding on members that are closely spaced or skew.

When members are closely spaced or skew, the space restriction will introduce problems to the access of welding. The cost of inspection, repair and reinspection of a defective weld will be much higher.

(25) Avoid over specifying the weld thickness.

Weld shrinkage may occur when there is distortion. It is important to minimize the weld thickness as the bigger the weld, the more heat applied and more distortion.

8.3 Non-preferred steel connections

This section shows several connections that are not as productive as those connections showed in the design guide. These connections should be avoided for practical reasons. Design engineer should work with steel fabricator to decide which type of connections is more preferred considering site installation constraints.

BEAM TO BEAM SHEAR CONNECTION	
PREFERRED CONNECTIONS	**NON-PREFERRED CONNECTION**
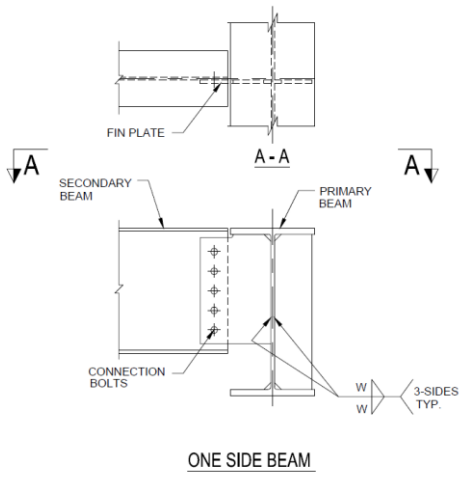	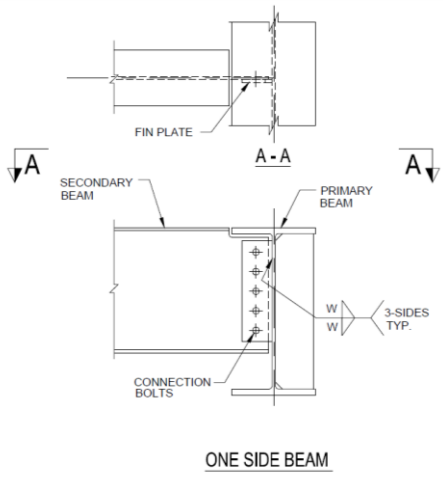

BEAM TO BEAM SHEAR CONNECTION

PREFERRED CONNECTIONS

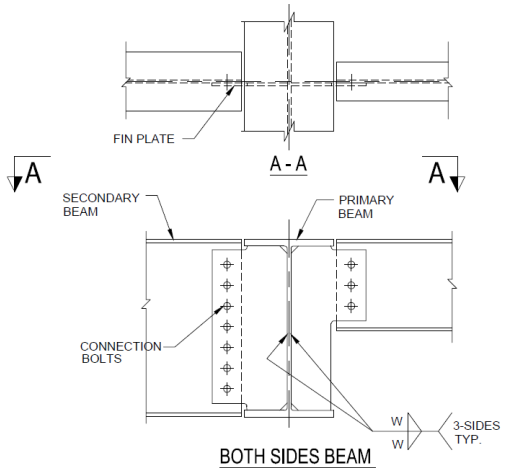

BOTH SIDES BEAM

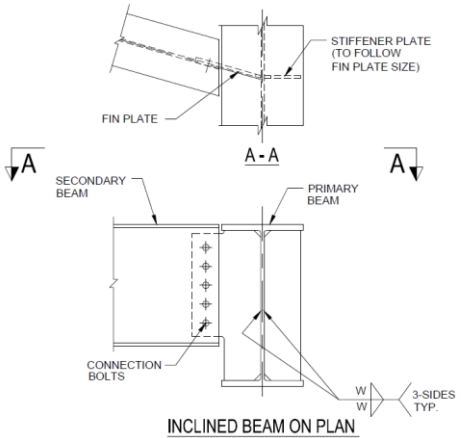

INCLINED BEAM ON PLAN

NON-PREFERRED CONNECTION

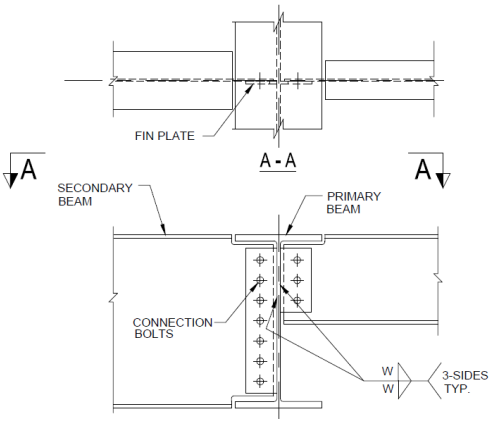

BOTH SIDES BEAM

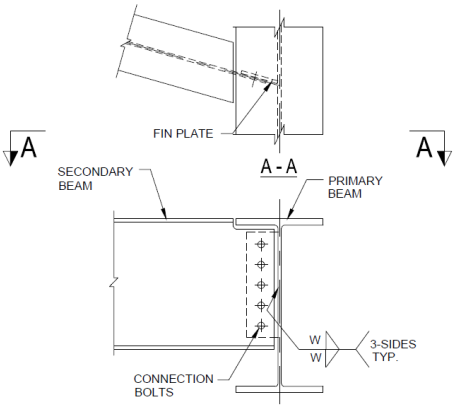

INCLINED BEAM ON PLAN

BEAM TO BEAM MOMENT CONNECTION

PERFERRED CONNECTION

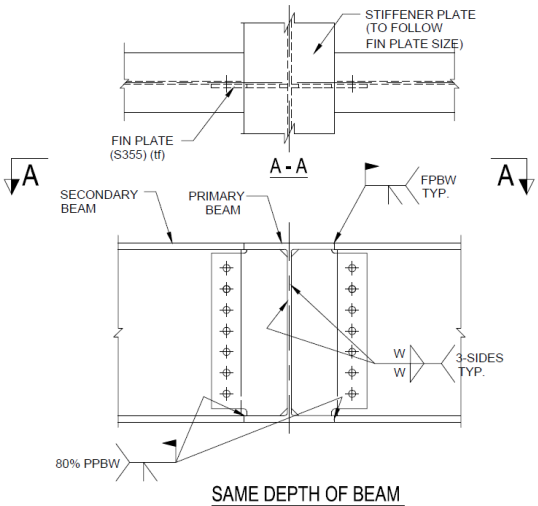

SAME DEPTH OF BEAM

NON-PERFERRED CONNECTION

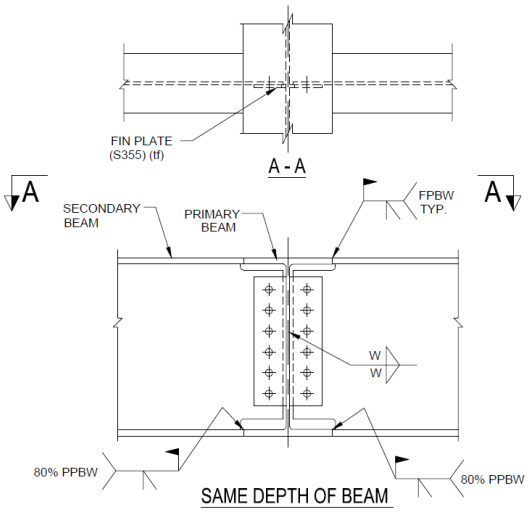

SAME DEPTH OF BEAM

BEAM TO COLUMN SHEAR CONNECTION

PREFERRED CONNECTION	NON-PREFERRED CONNECTION
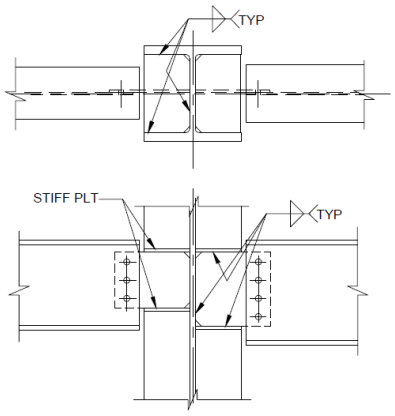 BEAM TO H COLUMN WEB	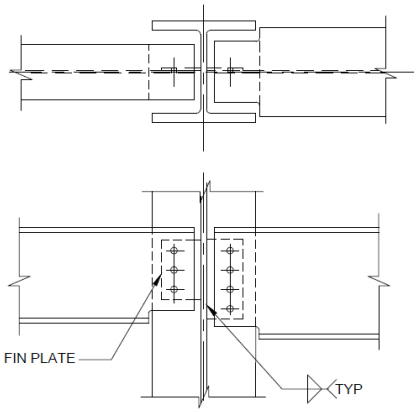 BEAM TO H COLUMN WEB

BEAM TO COLUMN MOMENT CONNECTION

PREFERRED CONNECTION	NON-PREFERRED CONNECTION
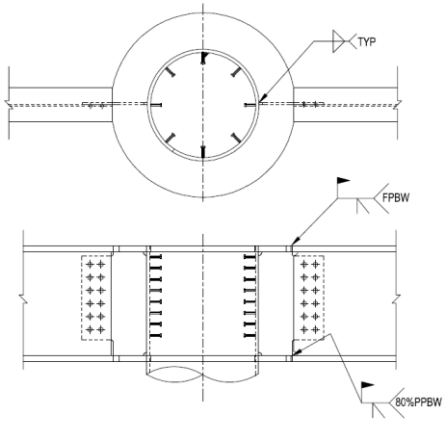 SAME DEPTH OF BEAM	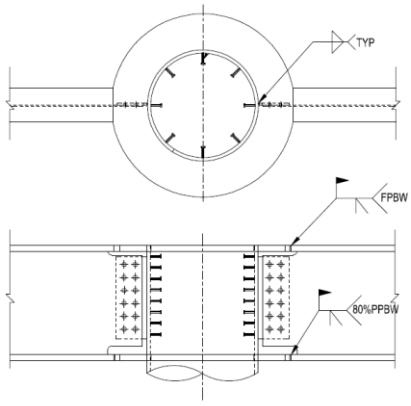 SAME DEPTH OF BEAM
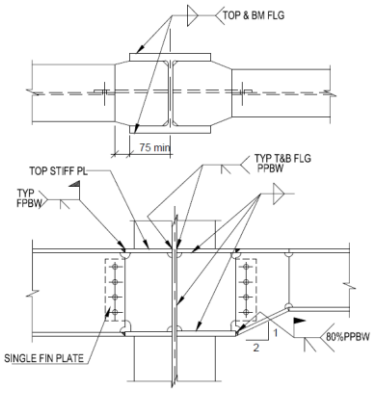 DIFFERENT DEPTH OF BEAM TO H COLUMN WEB	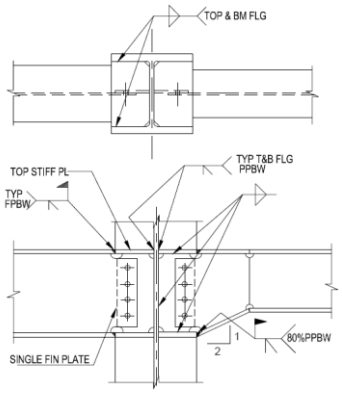 DIFFERENT DEPTH OF BEAM TO H COLUMN WEB

8.4 Alternate connections

Besides the standard connections given in other publications, this section shows several alternative connections proposed by fabricators which are easier to fabricate and install. These connections may be used when it is more suitable for site installation and could be more cost effective. For connections that are covered in this design guide, section numbers are given so that reader can refer to the relevant section for detailed calculations.

BEAM TO BEAM MOMENT CONNECTION	
ALTERNATE CONNECTION	
Section 2.6.1 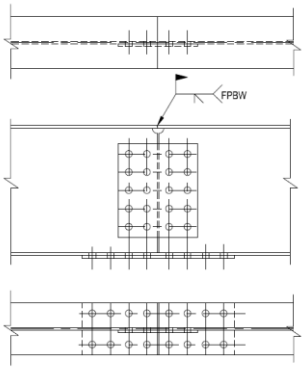 BEAM SPLICE	**Section 2.6.2** 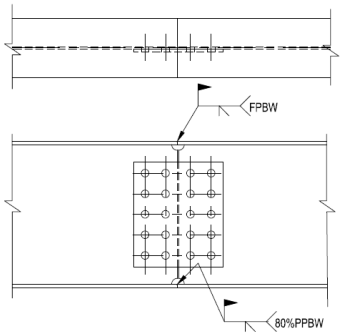 BEAM SPLICE
Section 2.4.4 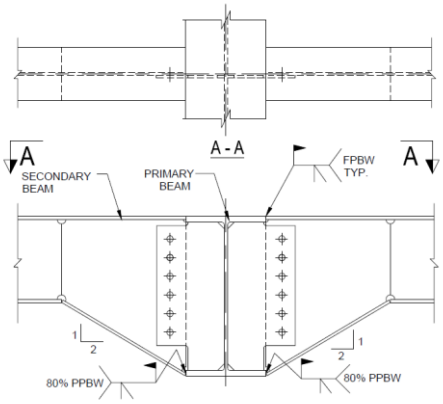 WITH HAUNCH	
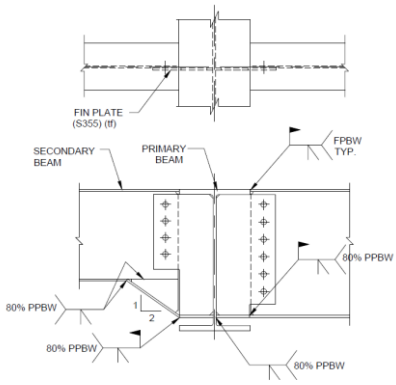 DIFFERENT DEPTH OF BEAM	**Section 2.4.5** 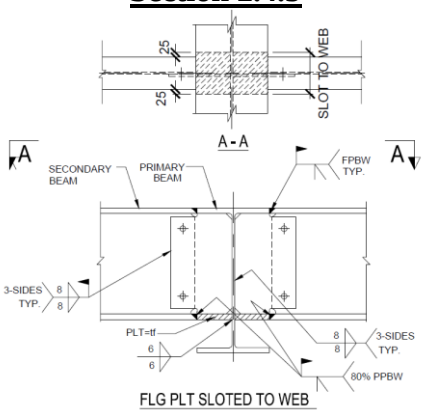 FLG PLT SLOTED TO WEB

BEAM TO COLUMN SHEAR CONNECTION
ALTERNATE CONNECTION

Section 2.3.8

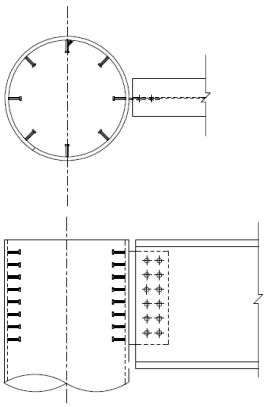

BEAM TO CIRCULAR COLUMN

Section 2.3.6

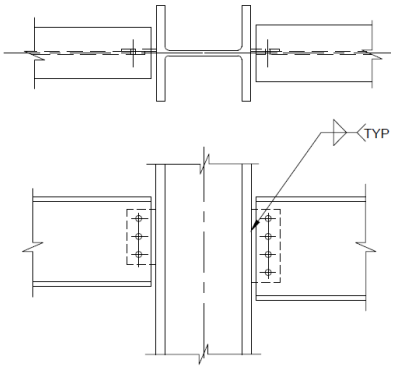

BEAM TO H COLUMN FLANGE

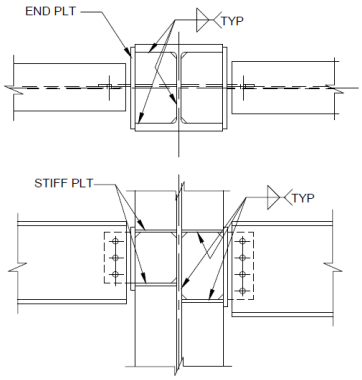

BEAM TO H COLUMN WEB
WITH END PLATE

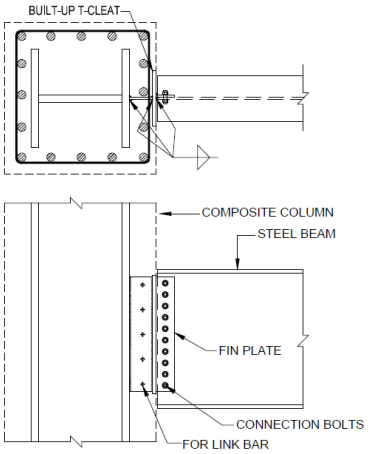

BEAM TO H COLUMN FLANGE (REBAR CONGESTION)

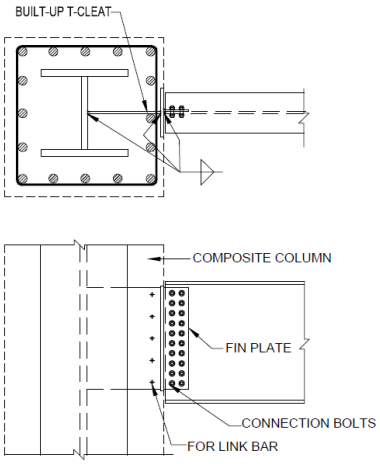

BEAM TO H COLUMN WEB (REBAR CONGESTION)

BEAM TO COLUMN MOMENT CONNECTION	
ALTERNATE CONNECTION	
Section 2.4.7	**Section 2.4.8**
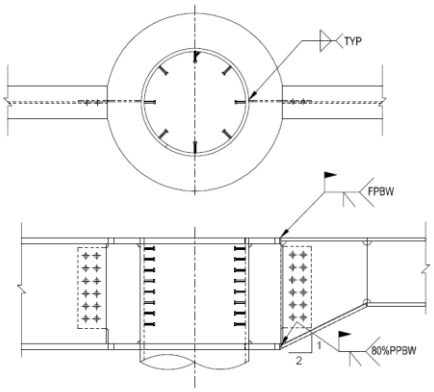 DIFFERENT DEPTH OF BEAM	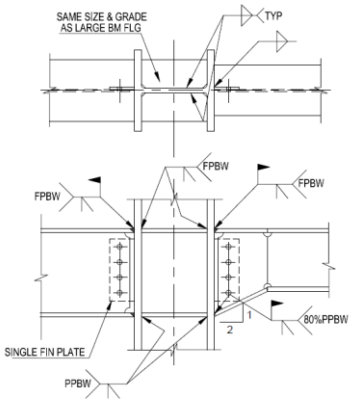 DIFFERENT DEPTH OF BEAM TO H COLUMN FLANGE

References

AISC 310:1997 (2005), Hollow Structural Sections Connections Manual, American Institute of Steel Construction.

AWS D1.1/D1.1M:2015 (2016), Structural Welding Code – Steel, American Welding Society, ANSI.

BC1:2012 (2012), Design guide on use of alternative structural steel to BS5950 and Eurocode 3, Building Construction Authority.

BS 5950-1:2000 (2010), Structural use of steelwork in building. Code of practice for design Rolled and welded sections, BSI

CECS 280:2010, Technical specification for structures with steel hollow sections, China Association for Engineering Construction Standardization.

CIDECT Design Guide 9 (2005), For structural hollow section column connections, Y.Kurobane, J.A.Packer, J.Wardenier, N.Yeomans.

DD CEB/TS 1992-4-2:2009, Design of fastenings for use in concrete, Part 4 – 2: Headed Fasteners, CEN.

Design of Fastenings in Concrete (1996), CEB bulletin dÍnformation No. 226, Thomas Telford.

Design of Joints in Steel and Composite Structures (2016), ECCS Eurocode Design Manuals, Jean-Pierre Jaspart, Klaus Weynand, European Convention for Constructional Steelwork.

Design of welded structures (1966), Omer W.Blodgett, The JAMES F.LINCOLN ARC WELDING FOUNDATION.

GB 50936-2014, Technical code for concrete filled steel tubular structures, Ministry of Housing and Urban-Rural Development.

Joints in steel construction: Simple joints to Eurocode 3 (2014), BCSA, Tata Steel, SCI publication No. P358, jointly published by the British Constructional Steelwork Association and the Steel Construction Institute.

Joints in steel construction: Moment-resisting joints to Eurocode 3 (2015), BSCA, Tata Steel, SCI publication No. P398, jointly published by the British Constructional Steelwork Association and the Steel Construction Institute.

NA to SS EN 1993-1-8: 2010 (2016) - Singapore National Annex to Eurocode 3: Design of steel structures - General rules - Design of joints, Building and Construction Standards Committee, Standards Council of Singapore.

SNO17, NCCI: Shear resistance of a fin plate connection, www.access-steel.com

SS EN 1992-1-1:2004 (2008), Eurocode 2 – Design of concrete structures, Part 1 -1 General rules and rules for buildings, Building and Construction Standards Committee, Standard Council of Singapore.

SS EN 1993-1-1: 2010 (2015), Eurocode 3 – Design of steel structures – General rules for buildings, Building and Construction Standards Committee, Standard Council of Singapore.

SS EN 1993-1-5:2009 (2016), Eurocode 3 – Design of steel structures – Plated structural elements, Building and Construction Standards Committee, Standards Council of Singapore.

SS EN 1993-1-8:2010 (2016), Eurocode 3 - Design of steel structures - Design of joints, Building and Construction Standards Committee, Standards Council of Singapore.

SS EN 1994-1-1: 2009, Eurocode 4 – Design of composite steel and concrete structure – General rules for buildings, Building and Construction Standards Committee, Standard Council of Singapore.

Steel building design: Design Data (2011), BSCA, Tata Steel, SCI publication No. P363, jointly published by the British Constructional Steelwork Association and the Steel Construction Institute.

Carol Drucker (2004), “30 Good rules for connection design”, Modern Steel Construction.

Annex A: Case Study for Productivity Improvement

Capability Development

The Product - *Design Guide for Buidable Steel Connections* will be shared by the Singapore Structural Steel Society (SSSS) with the industry for the adoption of the standardised buildable connections. It is envisaged that the use of this design guide by design consultants will align with connection details commonly adopted by steel fabricators in their fabrication and erection procedures. This will also reduce disruption from abortive work due to the design changes and the time taken to further develop the steel connection details can be minimised. Furthermore, calculations are given in the design guide examples for the design engineers to pick up the knowledge easily on their own. The design guide also contains a section on good practices for steel connection design, and comparison between preferred vs non-preferred connection to create greater awareness on the availability of alternate preferred connections.

Productivity Increase

In the case study to evaluate the productivity of the buildable connections proposed in the Design Guide, we have chosen the one-sided extended fin plate connection which can be found in Section 2.3.3 of the Design Guide (refer to figure below). In the non-preferred connection, the fin plate connection lies within the primary beam flange while the fin plate connection extends beyond the primary beam flange in the preferred connection.

Non-Preferred Connection

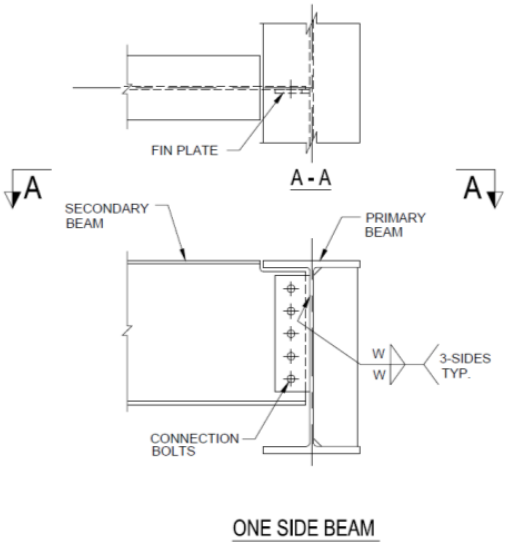

Preferred Connection

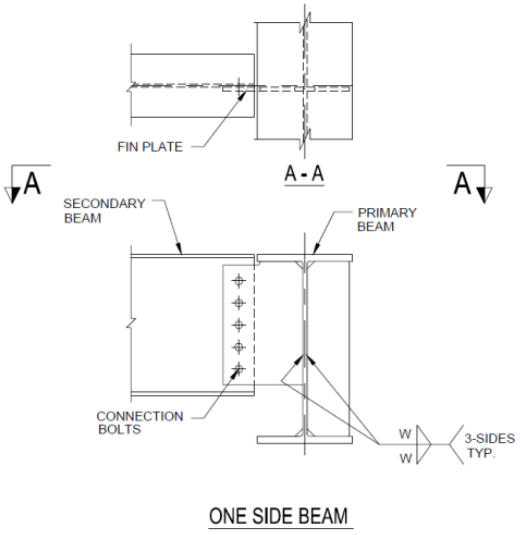

The process for each connection will comprise of beam preparation, fin plate preparation, welding and installation. The process for fin plate preparation and

welding are not expected to differ much in the time taken as shown in the table below. The improvement to productivity comes mainly from the beam preparation and installation. In the conventional method (non-preferred connection), the beam preparation entails a time-consuming process of profile cutting which has more than doubled the time taken for the proposed method (preferred connection). In the conventional method, the beam can only be hoisted 1 at a time as it is harder to maneuver the secondary beam into the space between the primary beams while in the proposed method, the beams can be hoisted 3 at a time for the secondary beams at 3 different levels. This will significantly cut down the time for installation per beam by more than 2 times as shown in the table below.

Conventional Method						***Proposed Method***					
Beam Preparation	man-power	min	sec	no. of beams	Time Req'd (hr)	**Beam Preparation**	man-power	min	sec	no. of beams	Time Req'd (hr)
Material Transportation	2	2	0	10	0.67	Material Transportation	2	2	0	10	0.67
Drilling	2	3	58	10	1.32	Drilling	2	3	58	10	1.32
Straight Cutting	2	18	28	10	6.16	Straight Cutting	2	18	28	10	6.16
Profile Cutting - Transportation	2	15	0	10	5.00						
Profile Cutting - Cutting	2	10	0	10	3.33						
Grinding of Beam for Fin Plate	1	1	20	10	0.22	Grinding of Beam for Fin Plate	1	2	30	10	0.42
Re-grinding of Beam	2	10	0	10	3.33	Re-grinding of Beam	2	5	0	10	1.67
TOTAL					**20.03**	**TOTAL**					**8.56**
Fin Plate Preparation	man-power	min	sec	no. of fin plates	Time Req'd (hr)	**Fin Plate Preparation**	man-power	min	sec	no. of fin plates	Time Req'd (hr)
Cutting	2	0	24	20	0.27	Cutting	2	0	28	20	0.31
Drilling	1	4	30	20	1.50	Drilling	1	4	30	20	1.50
Marking of Fin Plate	1	2	40	20	0.89	Marking of Fin Plate	1	2	40	20	0.89
Grinding of Fin Plate	1	0	40	20	0.22	Grinding of Fin Plate	1	1	2	20	0.34
Remarking of Fin Plate	2	1	0	20	0.67	Remarking of Fin Plate	2	1	0	20	0.67
Fit Up of Fin Plate	2	4	10	20	2.78	Fit Up of Fin Plate	2	1	50	20	1.22
TOTAL					**6.32**	**TOTAL**					**4.93**
Welding	man-power	min	sec	no. of fin plates	Time Req'd (hr)	**Welding**	man-power	min	sec	no. of fin plates	Time Req'd (hr)
Fin Plate Welding	2	12	20	20	8.22	Fin Plate Welding	2	12	20	20	8.22
Grinding and Brushing after We	2	2	35	20	1.72	Grinding and Brushing after We	2	2	35	20	1.72
TOTAL					**9.94**	**TOTAL**					**9.94**
Installation	man-power	min	sec	no. of beams	Time Req'd (hr)	**Installation**	man-power	min	sec	no. of beams	Time Req'd (hr)
Each beam hoisted individually	2	50	0	10	16.67	3 beams hoisted together	2	20	0	10	6.67
TOTAL					**16.67**	**TOTAL**					**6.67**
MAN-HOURS/BEAM					**5.30**	**MAN-HOURS/BEAM**					**3.01**
BEAM/MAN-HOUR					**0.19**	**BEAM/MAN-HOUR**					**0.33**
INCREASE IN PRODUCTIVITY					**76%**						

Based on the collected readings, the average number of mean that can be assembled for each man-hour is 0.33 for the proposed method as compared to the conventional method. This will lead to an improvement in productivity of 76%.