Baxter

**IMPORTANT PRODUCT INFORMATION**

July 21, 2017

Dear Peritoneal Dialysis Provider:

**Affected Product** (Singapore)

List of product codes affected/ supplied in Singapore:

| Product Code | Product Description | Serial Number |
|---|---|---|
| 5C4474 | HomeChoice Automated PD Cycler, 230V | ALL |
| R5C8320 | HomeChoice PRO Automated PD Cycler, 230V | ALL |

There are other product codes affected globally. Recipient should verify with Baxter representative if in doubt.

**Problem Description**

Baxter Healthcare Corporation has been made aware that users may not be following the instructions in the Operator's Manual and incorrectly opening disposable set packaging while setting up their Peritoneal Dialysis (PD) therapy, damaging the cassettes for the HomeChoice or HomeChoice PRO cyclers.

The HomeChoice cycler operator's manual specifically warns the operator to open the disposable set packaging by hand and not use tools that may damage the cassette sheeting. Please do not use knives, scissors, clamp accessories, or other objects to open the disposable set packaging. If damaged cassettes are used, the cyclers may not consistently detect very small holes/cuts in the sheeting of the cassette in the patient valve region (see Figure 1), and the cycler may deliver air into the patient.

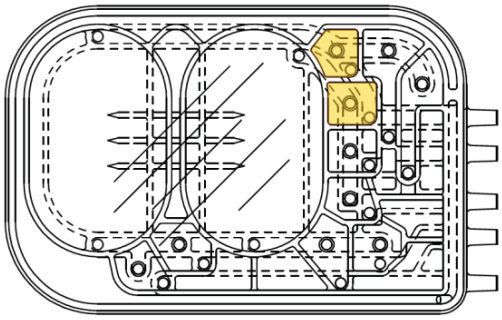

*Figure 1: Picture of Patient Valve Region (highlighted yellow) of the Disposable Cassette.*


Baxter is a registered trademark of Baxter International, Inc.

An indicator that you may have a hole in your cassette sheeting is the flow of fluid out of the connector at the end of the patient line following the prime phase of PD therapy. A hole in the cassette sheeting could lead to delivery of air to your peritoneal cavity.

Baxter is updating the HomeChoice labeling to include the additional risk information described in this letter (see enclosure). Below is an excerpt of the updated labeling:

- ***NOTE:*** *Fluid flow out of the connector at the end of the patient line when only the heater bag is on the heater pan and when the patient line or extension line is correctly positioned in the organizer may indicate a hole in the cassette sheeting and could lead to delivery of non-sterile air to your peritoneal cavity.*

  *End therapy. Return the disposable set to Baxter by calling Baxter Technical Assistance at the number located in Numbers to Call for Assistance on page 1-1. Restart your therapy using all new supplies (solution bags and disposable set).*

**Hazard Involved**

If the user does not follow existing instructions in the operator's manual while opening the disposable set packaging, it is possible for the patient valve portion of the cassette sheeting to be damaged and the damage to go undetected by the cycler and the user. If this occurs, delivery of air into the patient line at a rate of 10 to 30 mL/min may result during the fill or dwell phase of a Peritoneal Dialysis (PD) therapy. A resulting pneumoperitoneum (air in the peritoneal cavity), if clinically significant, would present as pain and, with increased intraperitoneal pressure from significant volume of air, there is potential for serious adverse health consequences.

**Actions to be taken if product was purchased directly from Baxter**

Baxter is requesting that you take the following actions:

1. As stated in the At-Home Guide, open the packaging of the disposable set by hand. Do not use a knife, scissor, or other sharp object to open the packaging.

2. Be aware that flow of fluid out of the connector at the end of the patient line after the prime phase of PD therapy is a visual indication of the potential for air delivery due to an undetected hole over the patient valve area in the cassette sheeting. Baxter will be updating the labeling to include this observation. Please refer to the enclosure for a copy of the new labeling.

3. Complete the enclosed customer reply form and return it to Baxter by scanning and e-mailing it to our sales representative. Returning the customer reply form promptly will prevent you from receiving repeat notices.

4. If you distribute this product to other facilities or departments within your institution, please forward a copy of this communication to them.

5. If you are a dealer, wholesaler, distributor/reseller, or original equipment manufacturer (OEM) that distributed any affected product to other facilities, please distribute this notification to customers.


Baxter is a registered trademark of Baxter International, Inc.

Baxter

**Action to be taken if product was purchased from a distributor**

Baxter is requesting that you take the following actions:

1. As stated in the Patient At-Home Guide, open the packaging of the disposable set by hand. Do not use a knife, scissor, or other sharp object to open the packaging.

2. Be aware that flow of fluid out of the connector at the end of the patient line after the prime phase of PD therapy has been demonstrated to be a consistent visual indication of the potential for air delivery due to an undetected hole over the patient valve area in the cassette sheeting. Baxter will be updating the labeling to include this observation. Please refer to the enclosure for a copy of the new labeling.

3. Please note that the Baxter customer reply form is not applicable. If a reply form is provided by your distributor or wholesaler, please return it to the supplier according to their instructions.

The Health Sciences Authority has been notified of this action. If you have questions regarding this communication or if you have any other questions, please call your Baxter Sales Representative.

Please kindly report any quality problems or any adverse events associated with the product to the following personnel:

- Please report Product Complaints to singapore_productcomplaint@baxter.com
- Please report Adverse Events to singapore_patientsafety@baxter.com

We sincerely apologize for any inconvenience this communication causes and thank you for your continued support. This field action will take additional measures to further ensure patient safety.

Sincerely,

Corynn Tan
Senior Manager, QA

Enclosures: Customer Reply Form
Peritoneal Dialysis Patient Letter
User Guide – New Instructions

CC: Chairman Medical Board and relevant Head of Department


Baxter is a registered trademark of Baxter International, Inc.

Baxter

# CUSTOMER REPLY FORM

*Important Product Information*

HomeChoice Automated PD Cycler and HomeChoice PRO Automated PD Cycler

**July 21, 2017**

**Affected Products:**

| Product Code | Product Description | Serial Number |
|---|---|---|
| 5C4474 | HomeChoice Automated PD Cycler, 230V | ALL |
| R5C8320 | HomeChoice PRO Automated PD Cycler, 230V | ALL |

Please complete and sign this form.

Email a scanned copy to Baxter Representative or fax it to **+65-6222 9927** as a confirmation that you have received this notification. A cover sheet is not required.

Please ensure that all below information is completed. Responding to this request will prevent unnecessary repeat notifications for this issue.

Please note that ***BAXTER CANNOT PROCESS UNSIGNED FORMS.***

**Completed By:** _____ **Title:** _____

*Print Name*

**Phone Number**: _____

**Signature:** _____ **Date:** _____/_____/_____

*Your signature above indicates understanding of the contents of the attached letter, that you performed the actions outlined and disseminated this information, if applicable.*


Baxter is a registered trademark of Baxter International, Inc.

Baxter

**IMPORTANT PRODUCT INFORMATION**

July 21, 2017

Dear Peritoneal Dialysis Patient:

**Affected Product** (Singapore)

List of product codes affected/ supplied in Singapore:

| Product Code | Product Description | Serial Number |
|---|---|---|
| 5C4474 | HomeChoice Automated PD Cycler, 230V | ALL |
| R5C8320 | HomeChoice PRO Automated PD Cycler, 230V | ALL |

There are other product codes affected globally. Recipient should verify with Baxter representative if in doubt.

**Problem Description**

Baxter Healthcare Corporation has been made aware that users may not be following the instructions in the Operator's Manual and incorrectly opening disposable set packaging while setting up their Peritoneal Dialysis (PD) therapy, damaging the cassettes for the HomeChoice or HomeChoice PRO cyclers.

The HomeChoice cycler operator's manual specifically warns the operator to open the disposable set packaging by hand and not use tools that may damage the cassette sheeting. Please do not use knives, scissors, clamp accessories, or other objects to open the disposable set packaging. If damaged cassettes are used, the cyclers may not consistently detect very small holes/cuts in the sheeting of the cassette in the patient valve region (see Figure 1), and the cycler may deliver air into the patient.

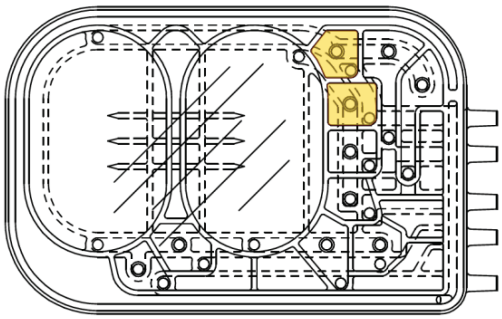

*Figure 1: Picture of Patient Valve Region (highlighted yellow) of the Disposable Cassette.*

An indicator that you may have a hole in your cassette sheeting is the flow of fluid out of the connector at the end of the patient line following the prime phase of PD therapy. A hole in the cassette sheeting could lead to delivery of air to your peritoneal cavity.

Baxter is updating the HomeChoice labeling to include the additional risk information described in this letter (see enclosure). Below is an excerpt of the updated labeling:

- ***NOTE:*** *Fluid flow out of the connector at the end of the patient line when only the heater bag is on the heater pan and when the patient line or extension line is correctly positioned in the organizer may indicate a hole in the cassette sheeting and could lead to delivery of non-sterile air to your peritoneal cavity.*

  *End therapy. Return the disposable set to Baxter by calling Baxter Technical Assistance at the number located in Numbers to Call for Assistance on page 1-1. Restart your therapy using all new supplies (solution bags and disposable set).*

**Hazard Involved**

If the user does not follow existing instructions in the operator's manual while opening the disposable set packaging, it is possible for the patient valve portion of the cassette sheeting to be damaged and the damage to go undetected by the cycler and the user. If this occurs, delivery of air into the patient line at a rate of 10 to 30 mL/min may result during the fill or dwell phase of a Peritoneal Dialysis (PD) therapy. A resulting pneumoperitoneum (air in the peritoneal cavity), if clinically significant, would present as pain and, with increased intraperitoneal pressure from significant volume of air, there is potential for serious adverse health consequences.

**Actions to be taken if product was purchased directly from Baxter**

Baxter is requesting that you take the following actions:

1. As stated in the Patient At-Home Guide, open the packaging of the disposable set by hand. Do not use a knife, scissor, or other sharp object to open the packaging.

2. Be aware that flow of fluid out of the connector at the end of the patient line after the prime phase of PD therapy is a visual indication of the potential for air delivery due to an undetected hole over the patient valve area in the cassette sheeting. Baxter will be updating the labeling to include this observation. Please refer to the enclosure for a copy of the new labeling.

3. Complete the enclosed customer reply form and return it to Baxter by scanning and e-mailing it to our sales representative. Returning the home patient reply form promptly will prevent you from receiving repeat notices.

The Health Sciences Authority has been notified of this action. If you have questions regarding this communication or if you have any other questions, please call your Baxter Sales Representative.

Please kindly report any quality problems or any adverse events associated with the product to the following personnel:

- Please report Product Complaints to singapore_productcomplaint@baxter.com
- Please report Adverse Events to singapore_patientsafety@baxter.com

We sincerely apologize for any inconvenience this communication causes and thank you for your continued support. This field action will take additional measures to further ensure patient safety.

Sincerely,

Corynn Tan
Senior Manager, QA

Enclosures: Customer Reply Form
User Guide – New Instructions


Baxter is a registered trademark of Baxter International, Inc.

# Enclosure: HomeChoice Patient At-Home Guide – New Instructions for Use

## Steps to prime the disposable set *(continued)*

5. Verify that the patient line is properly primed. The fluid level should be at or near the connector (1).

If the fluid level is not at or near the connector (1), see *Correcting Potential Issues with Priming* on page xx-xx.

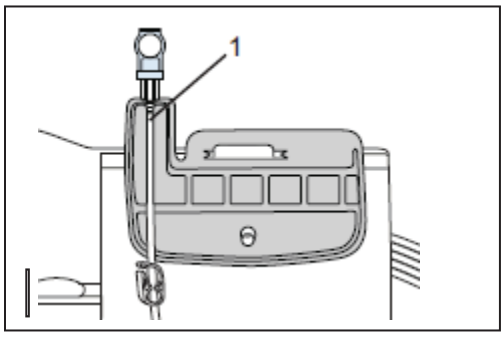


6. Before you wash your hands and connect yourself:
   - Make sure fluid is present at or near the connector at the end of the patient line (1).
   - Make sure the patient line clamp (2) is open.

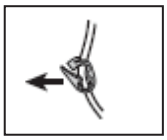

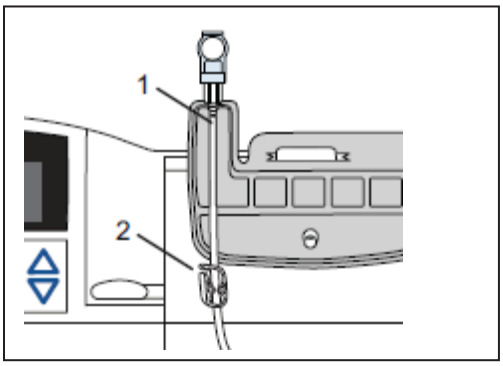


➢ **NOTE:** If a Low Recirculation Volume Set is not primed properly and the Fill Volume is less than 100 mL, a LOW DRAIN VOLUME alarm can occur. Improper priming in these conditions can also contribute to WARNING: NEGATIVE UF alarms later in the therapy.

## 15.7 Correcting Potential Issues with Priming

There are two potential issues with priming: Overprime and Underprime.

Overprime is a situation where flow of fluid out of the connector at the end of the patient line is observed. To troubleshoot Overprime issues, see *Troubleshooting Overprime* on page xx-xx.

- **NOTE:** Flow of fluid out of the connector at the end of the patient line may be indicative of problems that could put you as a patient at risk of harm. It is important to understand the cause of Overprime.

Underprime is a situation where the fluid level is below the connector at the end of the patient line. See *Reprime Patient Line Procedure* on page xx-xx.

# 15.7.1 Troubleshooting Overprime

- **NOTE:** Flow of fluid out of the connector at the end of the patient line may be indicative of problems that could put you as a patient at risk of harm. It is important to understand the cause of Overprime.

If flow of fluid out of the connector at the end of the patient line is observed, follow these steps below to troubleshoot Overprime.

## Steps to troubleshoot Overprime

1. Check for multiple bags on the heater pan. If only the heater bag is on the heater pan, proceed to step 2.

If there is more than one bag on the heater pan, move the extra bags off of the heater pan so that only the heater bag is on the heater pan.

Check for flow of fluid out of the connector at the end of the patient line. If there is no fluid flow, restart your therapy using all new supplies (solution bags and disposable set).

If there is still fluid flow, proceed to step 2.

Graphic in Development

2. Check that the end of the patient line or extension line is correctly positioned in the organizer. If the end of the patient line or extension line is correctly positioned in the organizer, proceed to step 3.

If the end of the patient line or extension line is not correctly positioned in the organizer, place the line back on the organizer, and position the end of the line correctly in the organizer.

Graphic in Development

## *15. Correcting Alarms*

Check for flow of fluid out of the connector at the end of the patient line. If there is no fluid flow, restart your therapy using all new supplies (solution bags and disposable set).

If there is still fluid flow, proceed to step 3.

3. End therapy. Return the disposable set to Baxter by calling Baxter Technical Assistance at the number located in Numbers to Call for Assistance on page 1-1. Restart your therapy using all new supplies (solution bags and disposable set).

- **NOTE:** Fluid flow out of the connector at the end of the patient line when only the heater bag is on the heater pan and when the patient line or extension line is correctly positioned in the organizer may indicate a hole in the cassette sheeting and could lead to delivery of non-sterile air to your peritoneal cavity.

## 15.7.2 Reprime Patient Line Procedure

If the fluid level is not at or near the connector at the end of the patient line, follow the steps below to reprime the patient line.

### Steps to reprime the patient line

1. Press when CHECK PATIENT LINE and CONNECT YOURSELF appear.

CHECK PATIENT LINE
CONNECT YOURSELF

2. Verify that the Frangible is broken. (Luer connections only.)

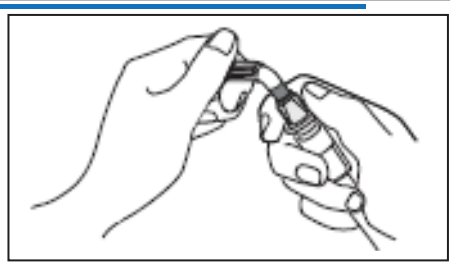

3. Press until REPRIME PATIENT LINE appears.

REPRIME PATIENT LINE

4. Press .
LINE IN ORGANIZER? appears.

LINE IN ORGANIZER?

5. Press .
PRIMING appears.

PRIMING...

6. Verify that the patient line is properly primed:
   - Make sure fluid is present near the connector at the end of the patient line (1).

CHECK PATIENT LINE and CONNECT YOURSELF appear.

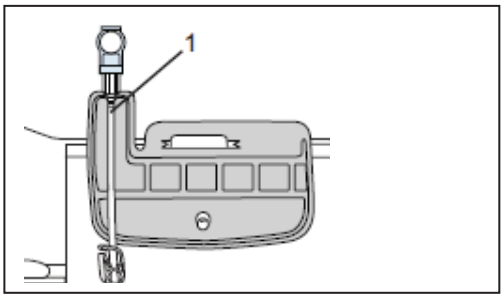


7. Repeat steps 1 through 6 until the patient line is primed.