TRUMPF Medizin Systeme GmbH + Co. KG
P.O. box 24 44 · 07310 Saalfeld · Germany

TRUMPF Medizin Systeme GmbH + Co. KG

Carl-Zeiss-Straße 7-9
07318 Saalfeld

Telephone +49 3671 586 -0
Fax +49 3671 586 -41105

med@trumpf.com
www.trumpf-med.com

Date 2015-06-24

Urgent Field Safety Notice

Corrective Action
concerning
Ceiling Supply Unit klinoPORT

Dear customer and user,

In the framework of product observation we see it as our duty to inform you about risks to patients and users that can arise when using the following products:

Product name	Item no.	Serial number
klinoPORT 706 M	4027210 4027410 4027510	100775185 to 101040245
klinoPORT 806 M		
klinoPORT 906 M		
klinoPORT 1006 M		
klinoPORT 1306 M		

Only motorised height-adjustable arms are affected by this action (recognisable by the letter "M" in the product name).

Description of the problem including the established cause:
Trumpf Medical was informed of an event where the motorised height-adjustable arm of a klinoPORT ceiling supply unit suddenly and abruptly fell to its lowest position. The cause analysis revealed that the welded connections of the drive did not comply with the specified condition and therefore led to breakage of these connections. It is currently not to be ruled out that further drives within the same serial numbers range may have the same fault. If further cases should occur, the risk of severe injury to persons cannot be ruled out.

www.trumpf-med.com
TRUMPF Medizin Systeme GmbH + Co. KG, Sitz Saalfeld, Amtsgericht Jena HRA 502248
Unlimited Liability Partner:TRUMPF Medizin Systeme Beteiligungs-GmbH, Puchheim, Amtsgericht München HRB 139265
Managing Board:Dr.-Ing. Eckhard Meiners

Enhancing outcomes for patients and their caregivers.

What measures should the user take?

Trumpf Medical will replace all potentially affected components in order to prevent a repetition of this incident. We would ask you to please understand that we are unable to serve all customers immediately.

The following safety precautions must be taken to prevent further incidents until a replacement of your equipment has taken place:

- Set all motorized height-adjustable arms of the klinoPORT ceiling supply unit to the lowest position:

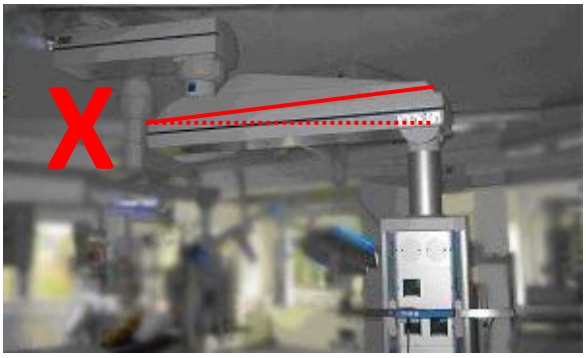

Position high = wrong

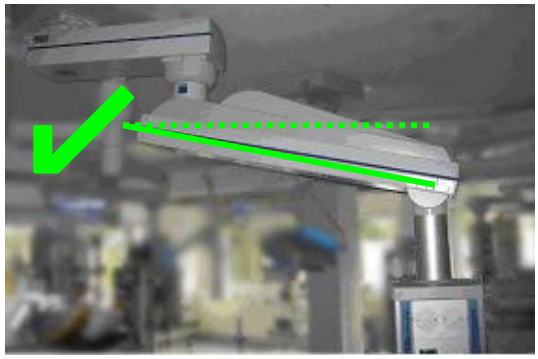

Position low = right

- Do not operate the height adjustment under any circumstances!
  Make this prohibition known by affixing a warning sign to the device if possible or remove the electrical fine-wire fuse of the drive (see sketch).

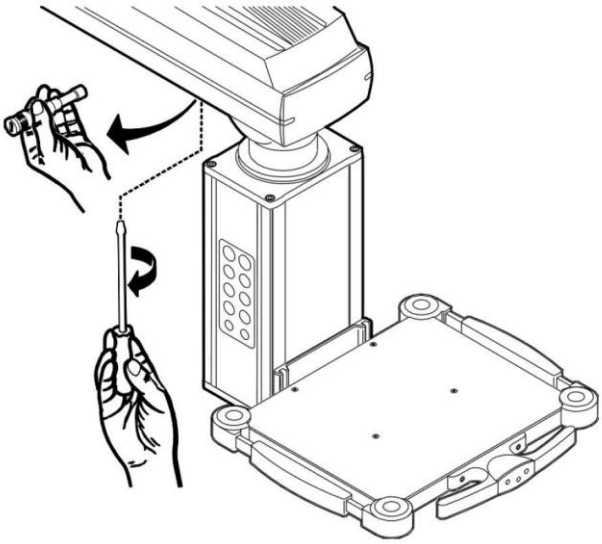

V100

TRUMPF Medizin Systeme GmbH + Co. KG, Sitz Saalfeld, Amtsgericht Jena HRA 502248
Unlimited Liability Partner:TRUMPF Medizin Systeme Beteiligungs-GmbH, Puchheim, Amtsgericht München HRB 139265
Managing Board:Dr.-Ing. Eckhard Meiners

Enhancing outcomes for patients and their caregivers.

Disclosure of the information contained herein
Please ensure that within your organisation, that all users of the above-mentioned products and other relevant persons (e.g. cleaning staff) are informed about this safety information.
Please store this information at least so long until this matter has been fully resolved.
If the products have been passed to third parties, please forward a copy of this information or inform the contact person mentioned below.
The responsible Regulatory Agency has received a copy of this "Urgent Field Safety Notice“.

Confirmation of receipt
Please confirm the receipt of this safety information by sending us the completed form in Appendix 1. Prompt return prevents further letters on this subject.

Contact person Trumpf Medical:
TRUMPF Medizin Systeme GmbH + Co. KG
Mr Felix Bauer
Carl-Zeiss-Str. 7-9
D-07318 Saalfeld
Telephone +49 3671 586 41 556
Fax +49 3671 586 41 487
med-service@de.trumpf.com

Dr. Manfred Fehn
Director of Quality Management

Attachments:
Appendix 1 Confirmation of User Receipt

www.trumpf-med.com
TRUMPF Medizin Systeme GmbH + Co. KG, Sitz Saalfeld, Amtsgericht Jena HRA 502248
Unlimited Liability Partner:TRUMPF Medizin Systeme Beteiligungs-GmbH, Puchheim, Amtsgericht München HRB 139265
Managing Board:Dr.-Ing. Eckhard Meiners
Enhancing outcomes for patients and their caregivers.